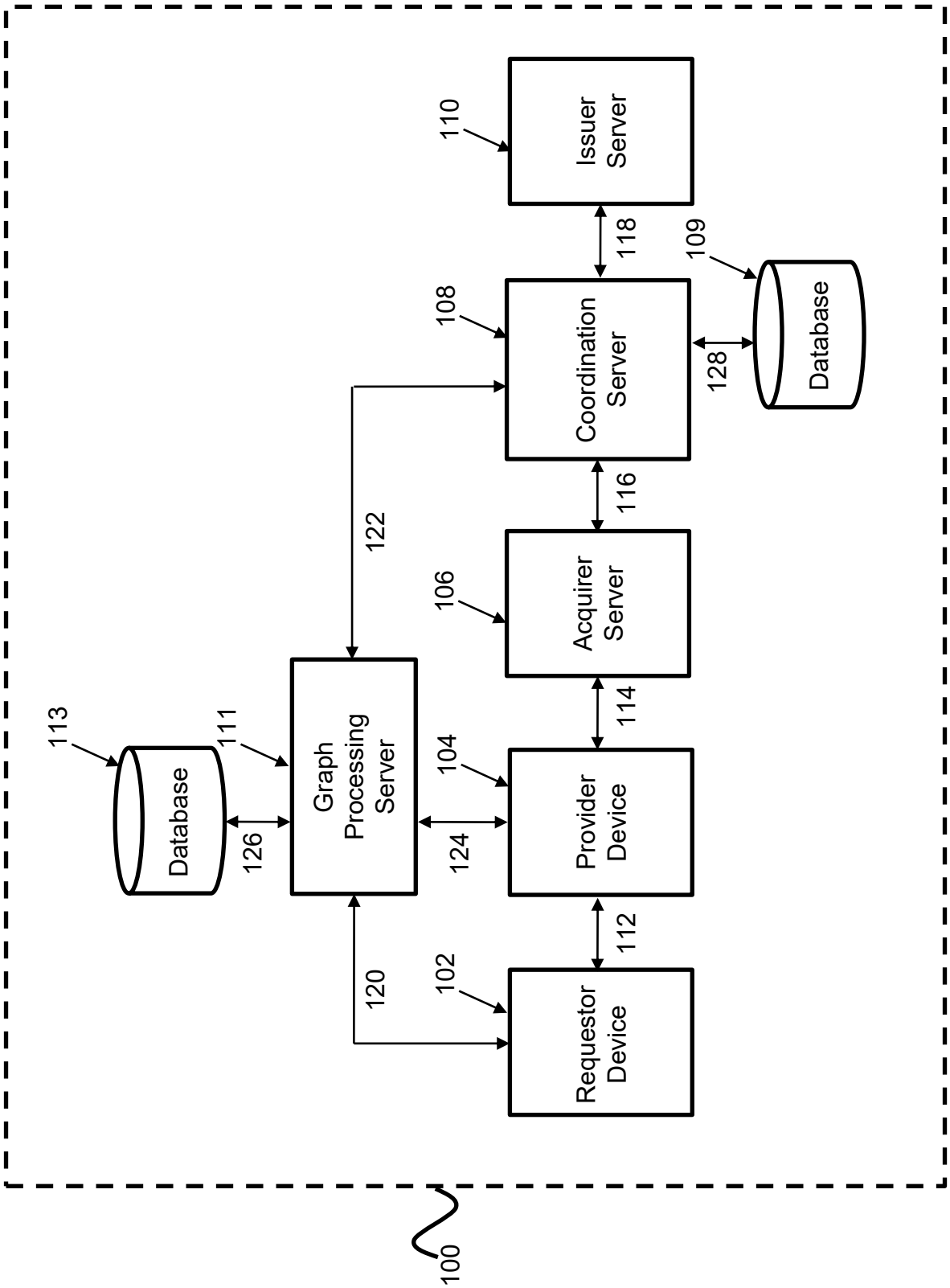
100
Requestor Device
102
Provider Device
104
Acquirer Server
106
Coordination Server
108
Issuer Server
110
Graph Processing Server
111
Database
113
Database
109
112
114
116
118
120
122
124
126
128

Figure 1

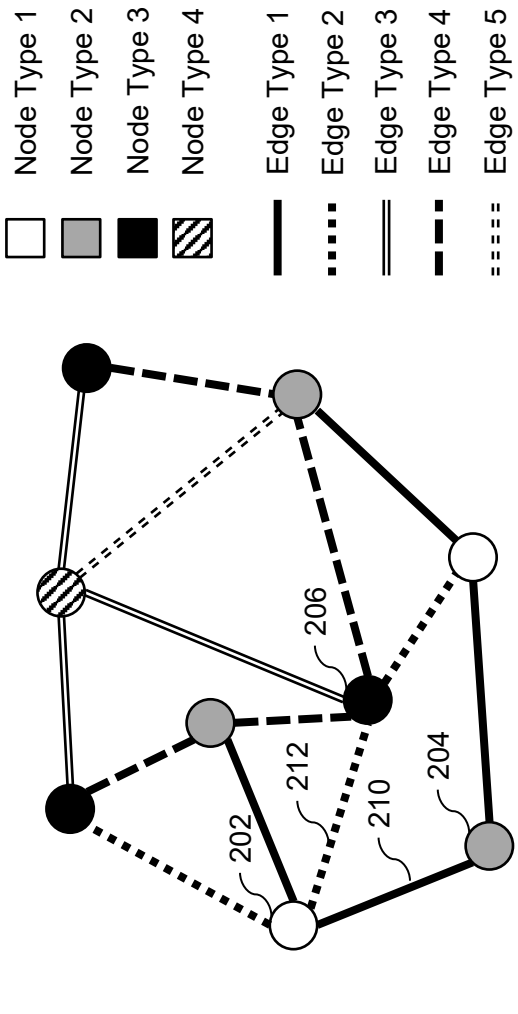
Node Type 1
Node Type 2
Node Type 3
Node Type 4
Edge Type 1
Edge Type 2
Edge Type 3
Edge Type 4
Edge Type 5
206
212
210
204
202
200

Figure 2

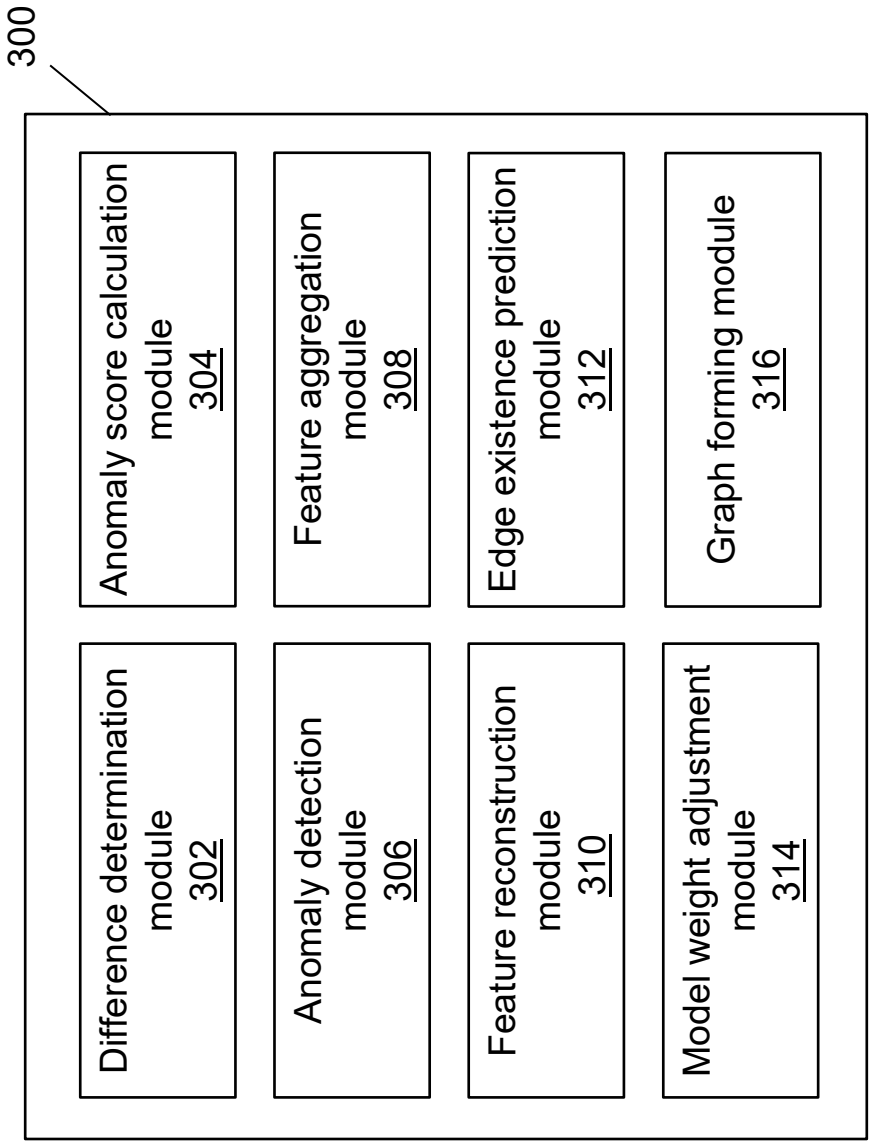
300
Difference determination module 302
Anomaly score calculation module 304
Anomaly detection module 306
Feature aggregation module 308
Feature reconstruction module 310
Edge existence prediction module 312
Model weight adjustment module 314
Graph forming module 316

Figure 3

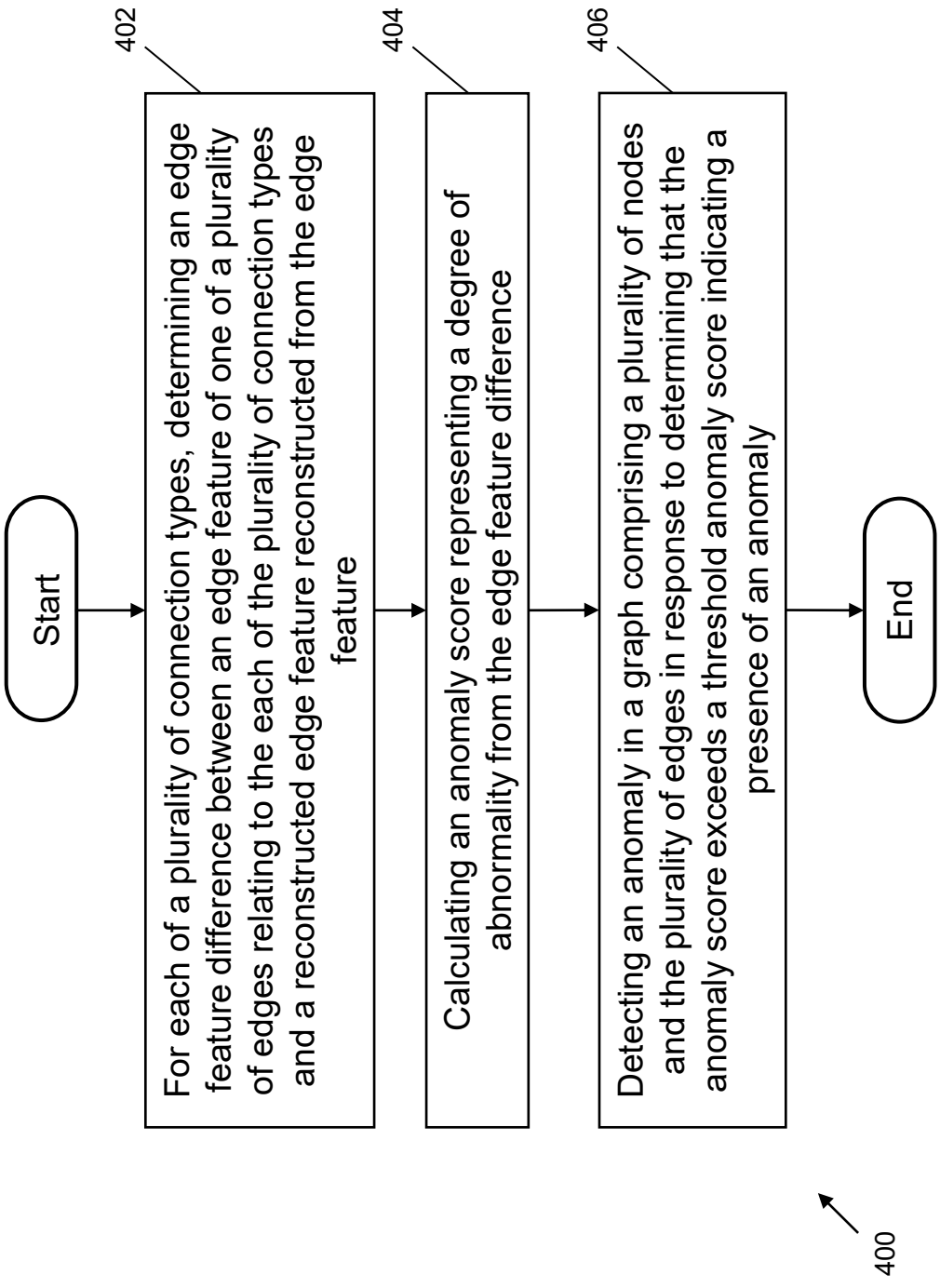
Start
402
For each of a plurality of connection types, determining an edge feature difference between an edge feature of one of a plurality of edges relating to the each of the plurality of connection types and a reconstructed edge feature reconstructed from the edge feature
404
Calculating an anomaly score representing a degree of abnormality from the edge feature difference
406
Detecting an anomaly in a graph comprising a plurality of nodes and the plurality of edges in response to determining that the anomaly score exceeds a threshold anomaly score indicating a presence of an anomaly
End
400

Figure 4

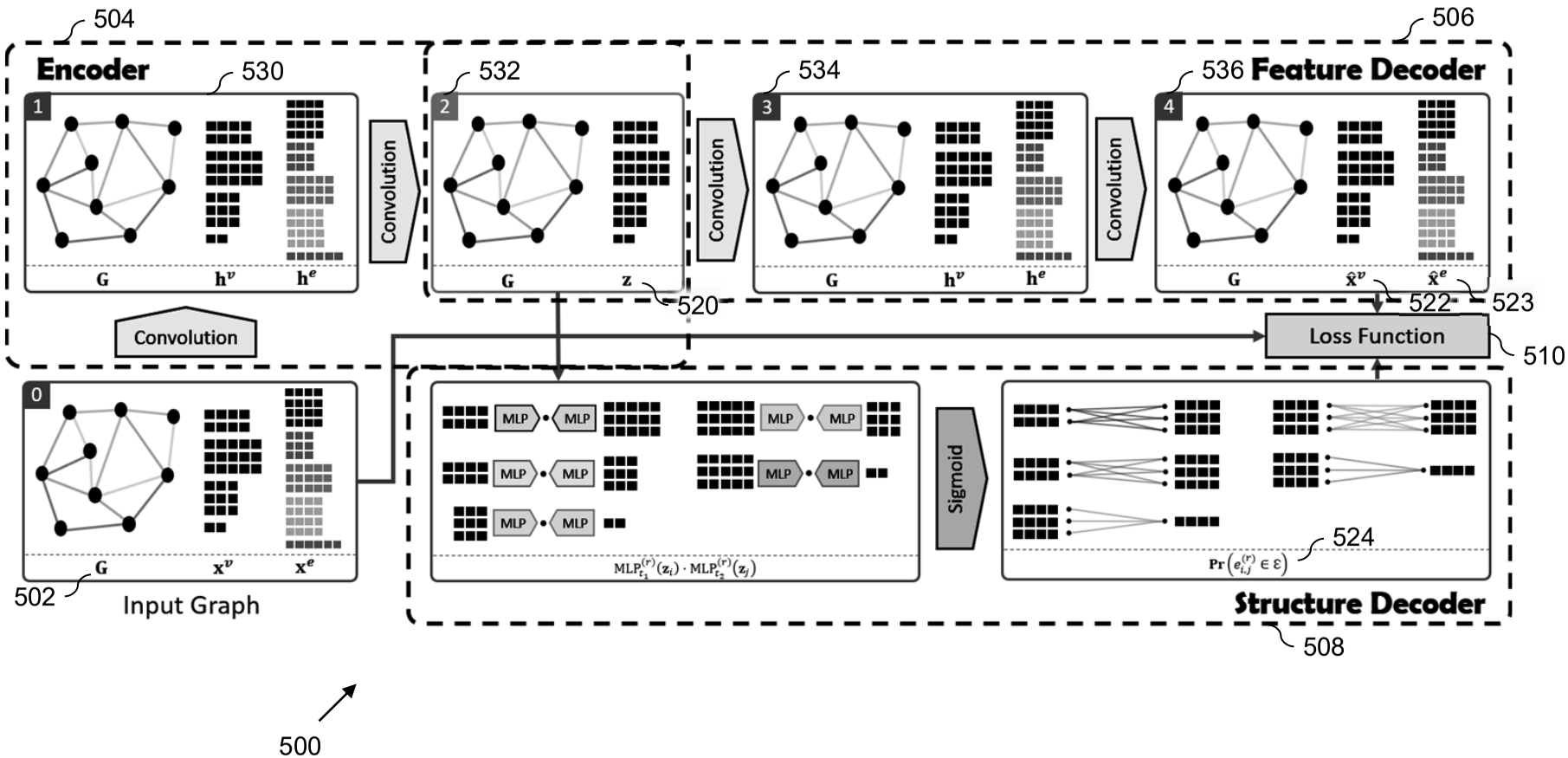
504
506
Encoder
530
532
534
536
Feature Decoder
1
2
3
4
G
$\mathbf{h}^v$
$\mathbf{h}^e$
z
$\hat{\mathbf{x}}^v$
$\hat{\mathbf{x}}^e$
Convolution
520
522
523
Loss Function
510
0
$\mathbf{x}^v$
$\mathbf{x}^e$
502
Input Graph
MLP
Sigmoid
524
$\mathrm{MLP}_{t_1}^{(r)}(\mathbf{z}_i) \cdot \mathrm{MLP}_{t_2}^{(r)}(\mathbf{z}_j)$
$\Pr\left(e_{i,j}^{(r)} \in \mathcal{E}\right)$
Structure Decoder
508
500

Figure 5

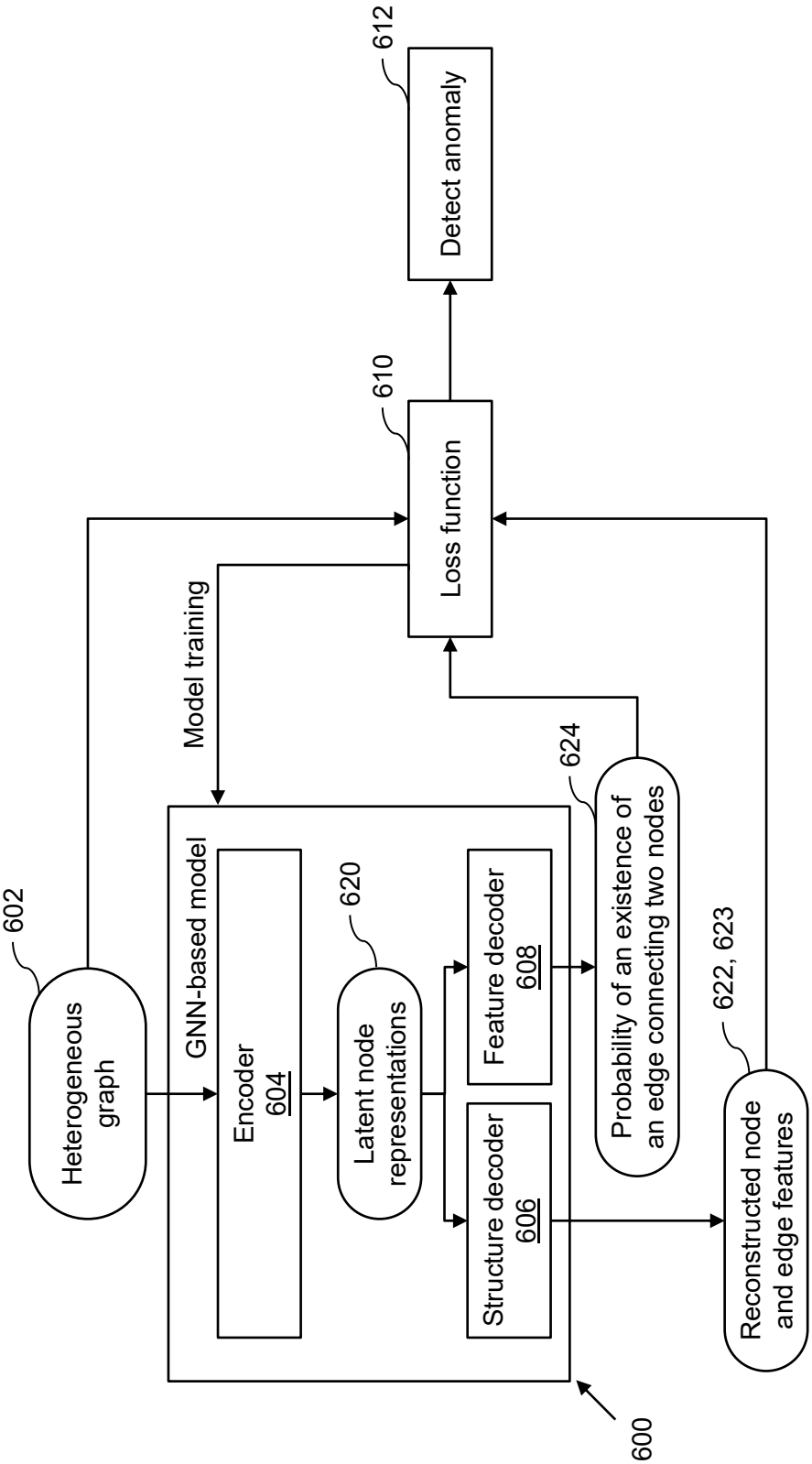
612
Detect anomaly
610
Loss function
Model training
602
Heterogeneous graph
GNN-based model
Encoder 604
620
Latent node representations
Feature decoder 608
Structure decoder 606
624
Probability of an existence of an edge connecting two nodes
622, 623
Reconstructed node and edge features
600

Figure 6

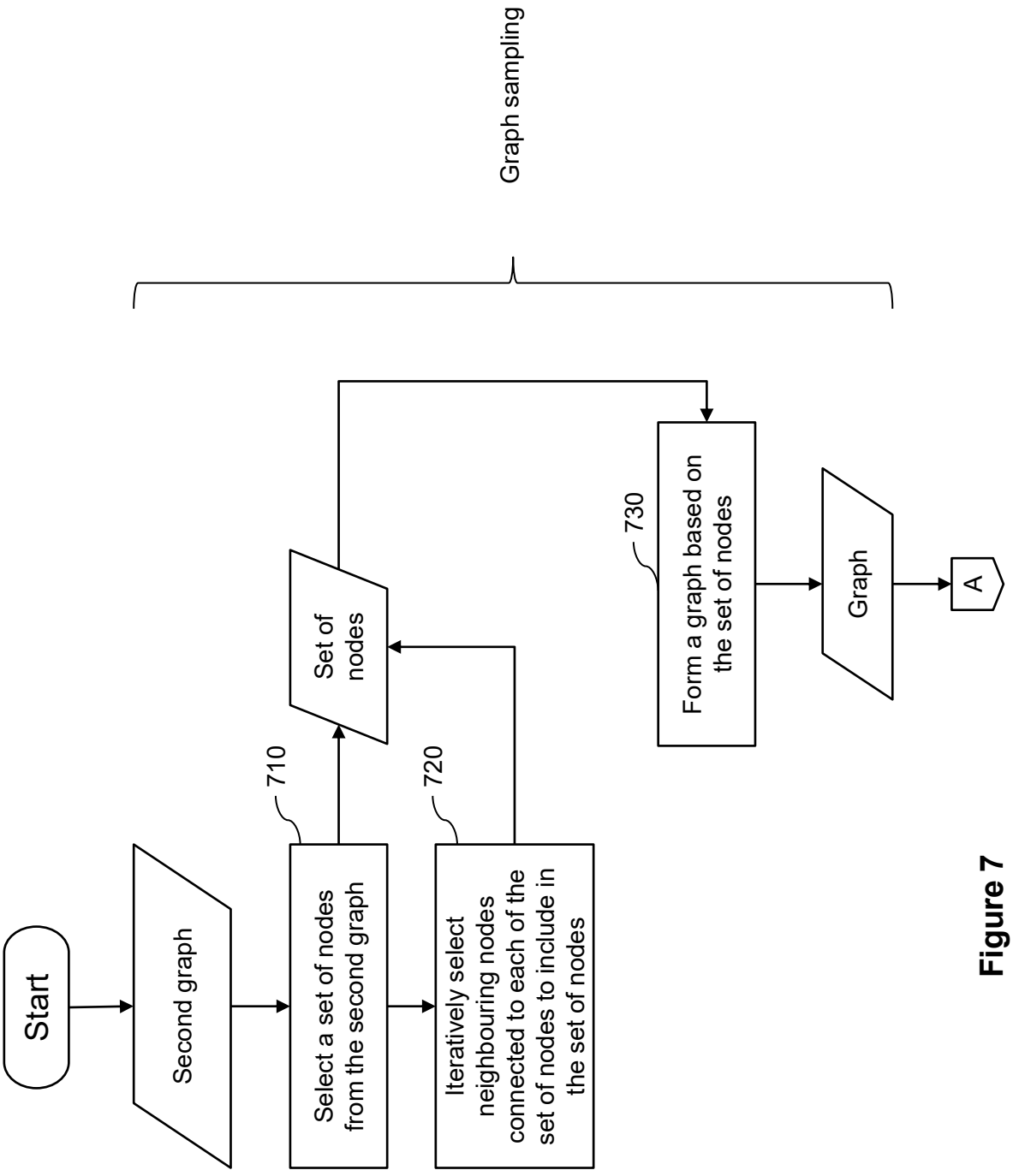
Graph sampling
Start
Second graph
710
Select a set of nodes from the second graph
720
Iteratively select neighbouring nodes connected to each of the set of nodes to include in the set of nodes
Set of nodes
730
Form a graph based on the set of nodes
Graph
A

Figure 7

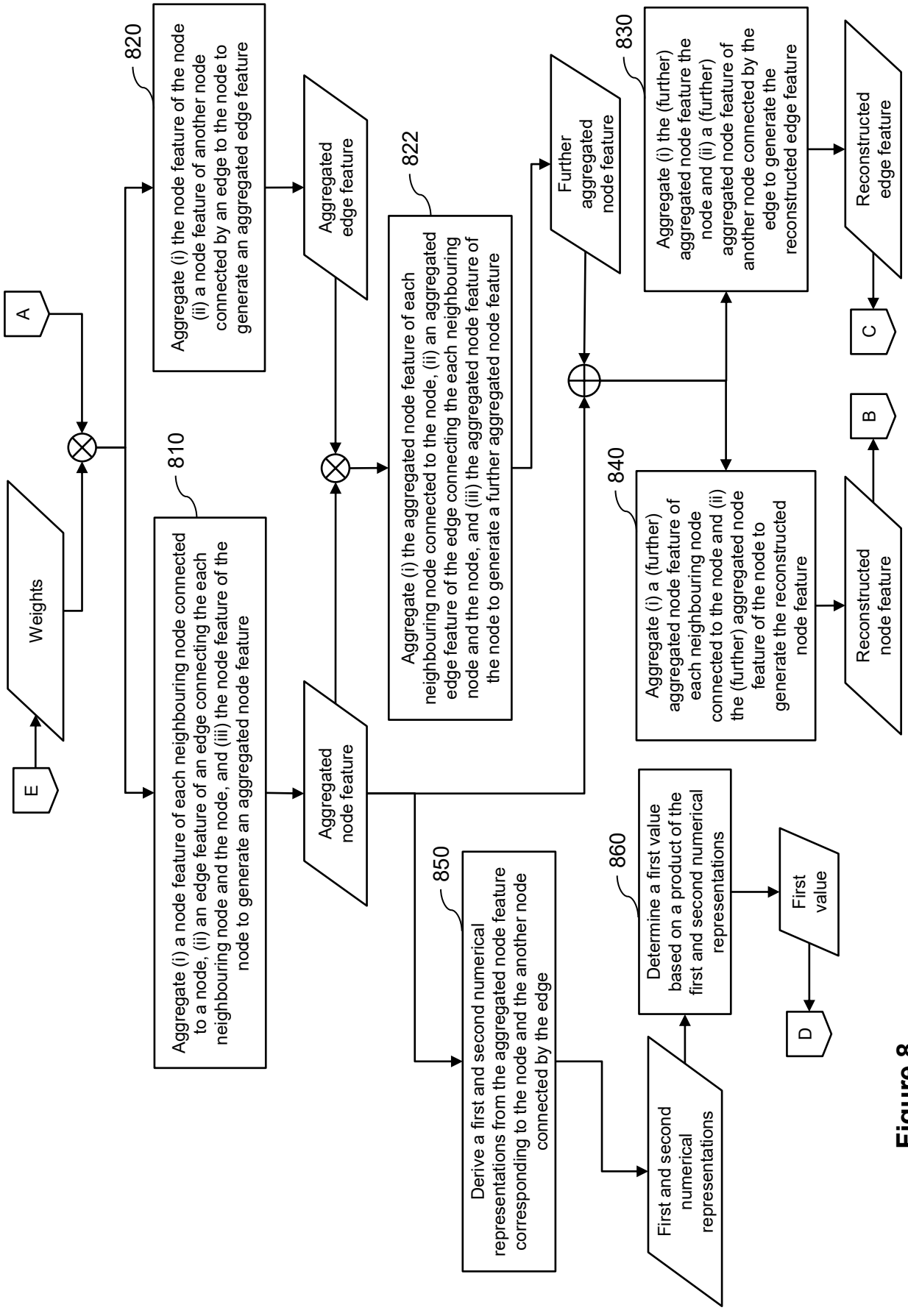
E
Weights
A
810
Aggregate (i) a node feature of each neighbouring node connected to a node, (ii) an edge feature of an edge connecting the each neighbouring node and the node, and (iii) the node feature of the node to generate an aggregated node feature
820
Aggregate (i) the node feature of the node (ii) a node feature of another node connected by an edge to the node to generate an aggregated edge feature
Aggregated node feature
Aggregated edge feature
822
Aggregate (i) the aggregated node feature of each neighbouring node connected to the node, (ii) an aggregated edge feature of the edge connecting the each neighbouring node and the node, and (iii) the aggregated node feature of the node to generate a further aggregated node feature
Further aggregated node feature
830
Aggregate (i) the (further) aggregated node feature the node and (ii) a (further) aggregated node feature of another node connected by the edge to generate the reconstructed edge feature
Reconstructed edge feature
C
B
840
Aggregate (i) a (further) aggregated node feature of each neighbouring node connected to the node and (ii) the (further) aggregated node feature of the node to generate the reconstructed node feature
Reconstructed node feature
850
Derive a first and second numerical representations from the aggregated node feature corresponding to the node and the another node connected by the edge
First and second numerical representations
860
Determine a first value based on a product of the first and second numerical representations
First value
D

Figure 8

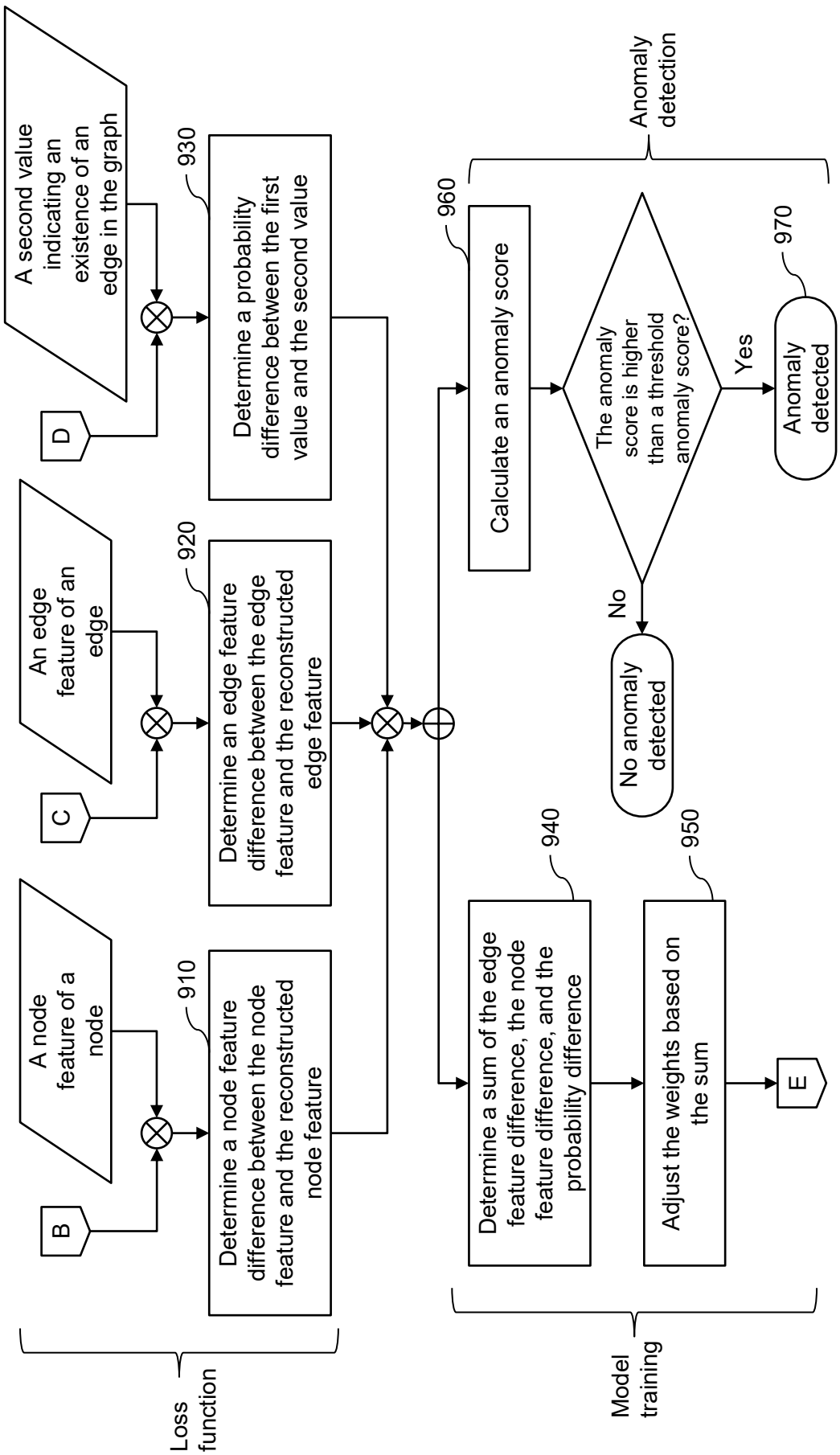
A second value indicating an existence of an edge in the graph
D
930
Determine a probability difference between the first value and the second value
An edge feature of an edge
C
920
Determine an edge feature difference between the edge feature and the reconstructed edge feature
A node feature of a node
B
910
Determine a node feature difference between the node feature and the reconstructed node feature
Loss function
960
Calculate an anomaly score
The anomaly score is higher than a threshold anomaly score?
Yes
970
Anomaly detected
No
No anomaly detected
Anomaly detection
940
Determine a sum of the edge feature difference, the node feature difference, and the probability difference
950
Adjust the weights based on the sum
E
Model training

Figure 9

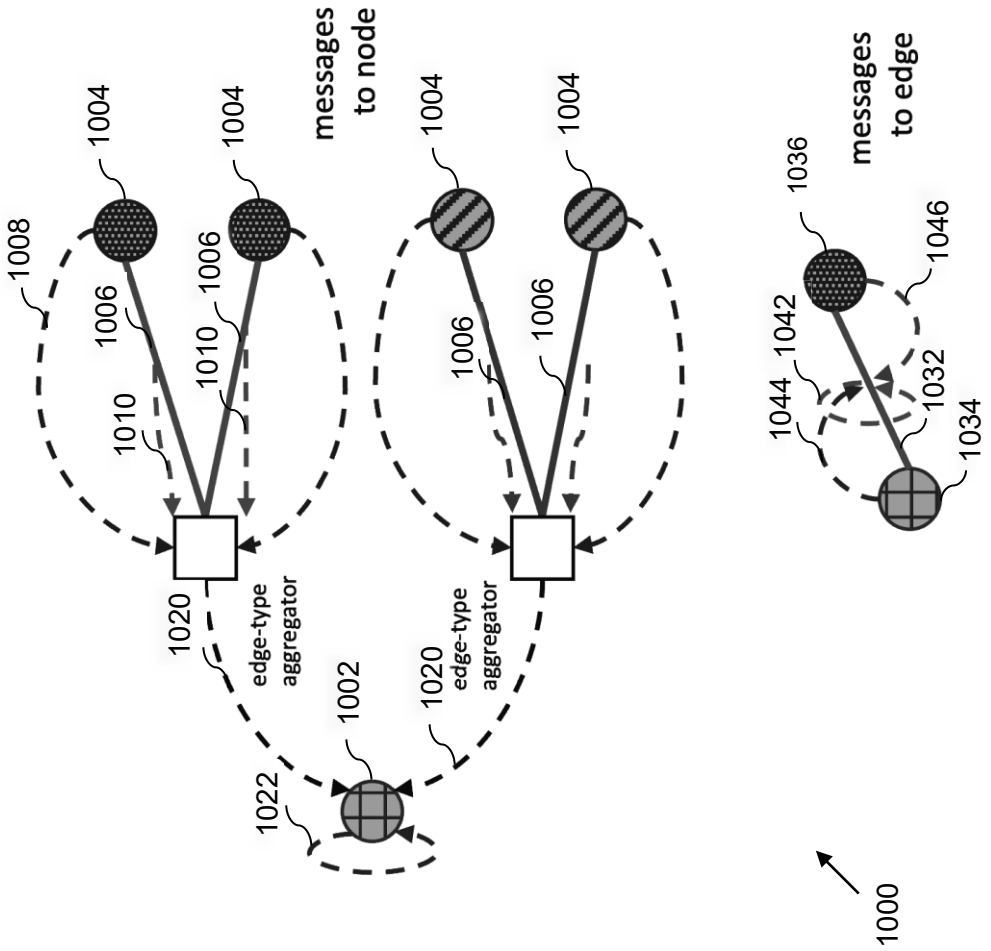
1000
1002
1004
1004
1004
1004
1006
1006
1006
1006
1008
1010
1010
1020
1020
1022
1032
1034
1036
1042
1044
1046
edge-type aggregator
edge-type aggregator
messages to node
messages to edge

Figure 10

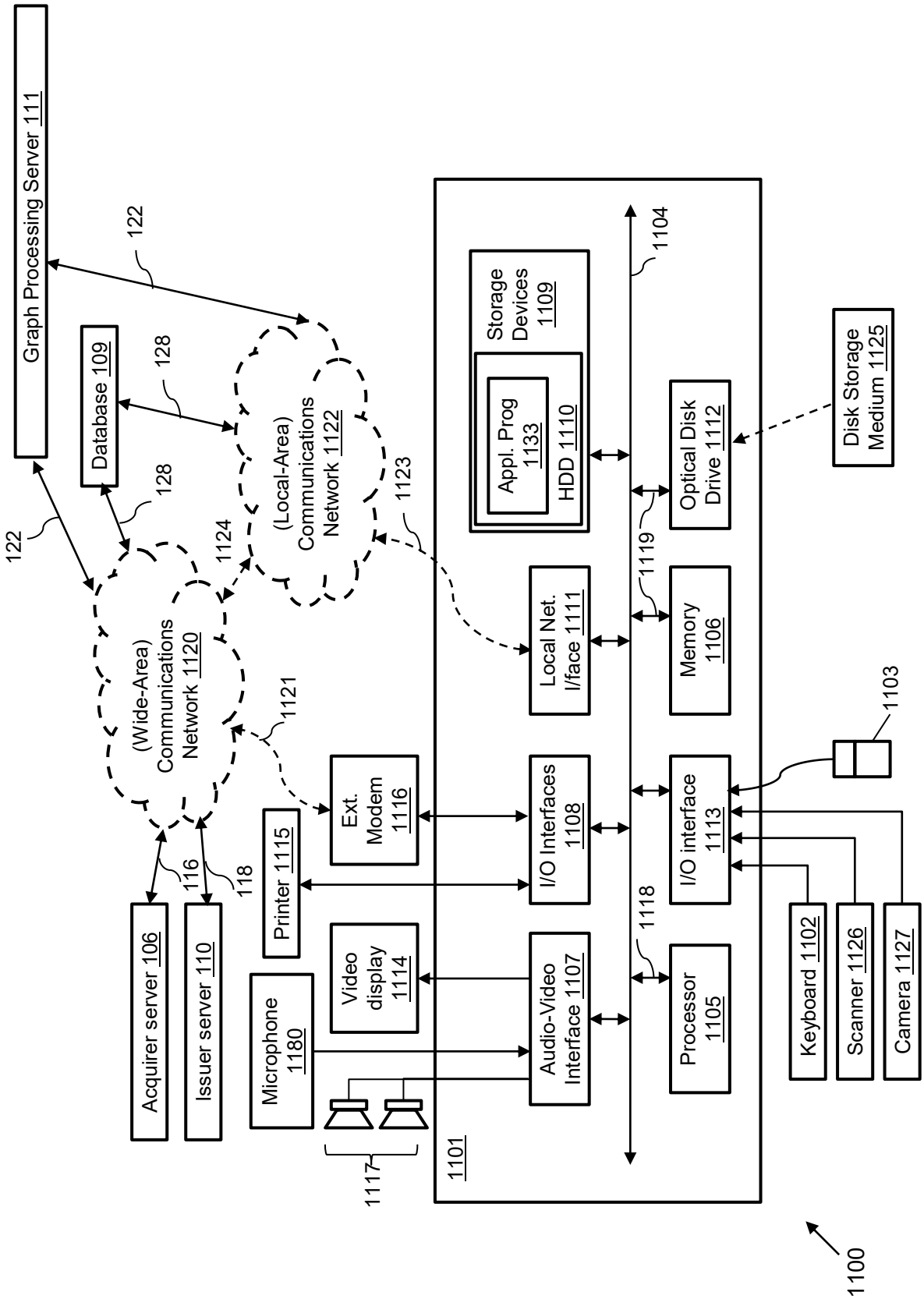
Graph Processing Server 111
122
Database 109
128
128
122
(Local-Area) Communications Network 1122
1123
1124
(Wide-Area) Communications Network 1120
1121
Storage Devices 1109
Appl. Prog 1133
HDD 1110
1104
Optical Disk Drive 1112
Disk Storage Medium 1125
Local Net. I/face 1111
1119
Memory 1106
Ext. Modem 1116
I/O Interfaces 1108
I/O interface 1113
1103
Acquirer server 106
116
Issuer server 110
118
Printer 1115
Video display 1114
1118
Microphone 1180
Audio-Video Interface 1107
Processor 1105
Keyboard 1102
Scanner 1126
Camera 1127
1117
1101
1100

Figure 11

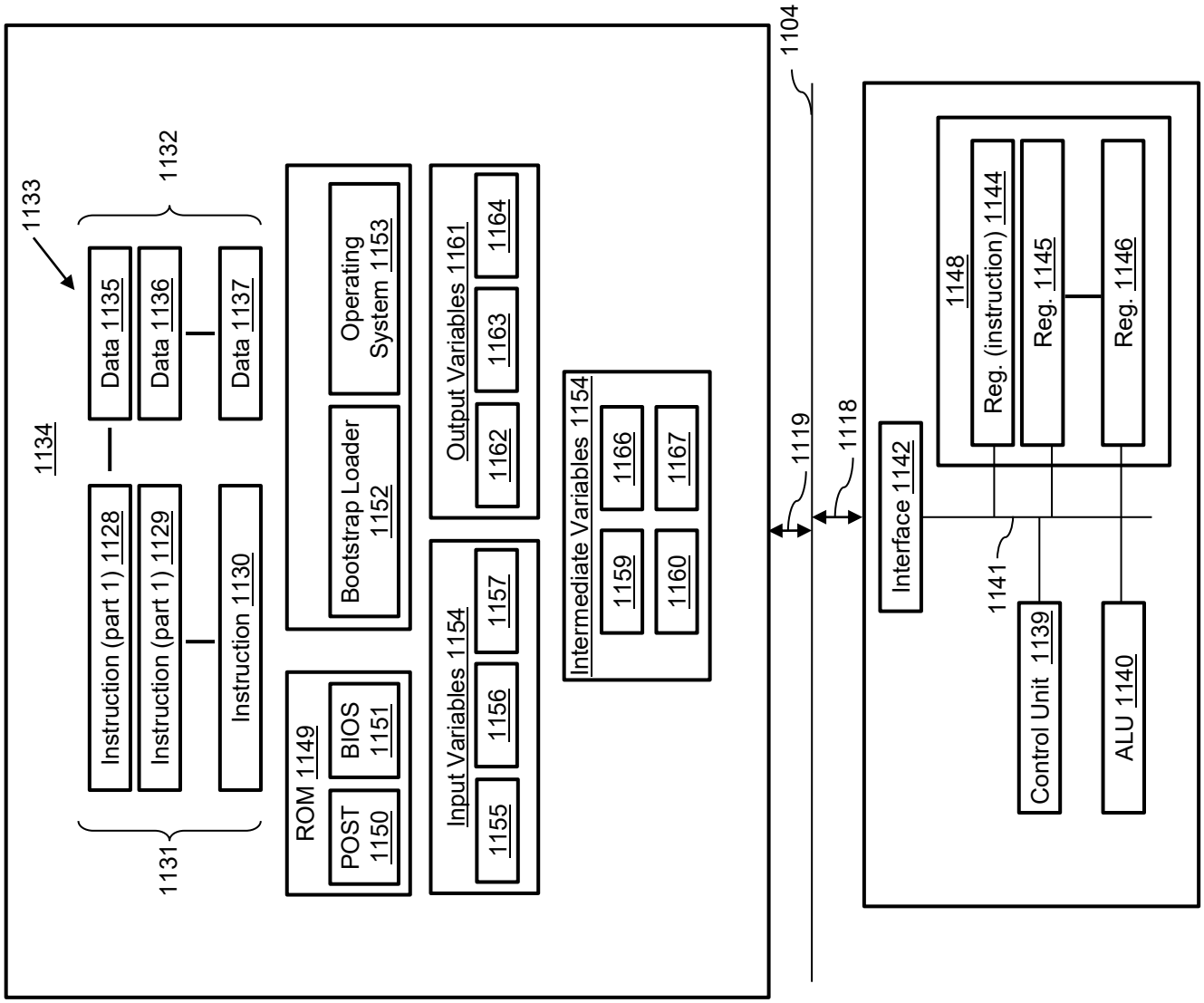
1133
1132
1134
Data 1135
Data 1136
Data 1137
Instruction (part 1) 1128
Instruction (part 1) 1129
Instruction 1130
1131
ROM 1149
POST 1150
BIOS 1151
Bootstrap Loader 1152
Operating System 1153
Input Variables 1154
1155
1156
1157
Output Variables 1161
1162
1163
1164
Intermediate Variables 1154
1159
1160
1166
1167
1104
1119
1118
Interface 1142
1148
Reg. (instruction) 1144
Reg. 1145
Reg. 1146
1141
Control Unit 1139
ALU 1140

Figure 12

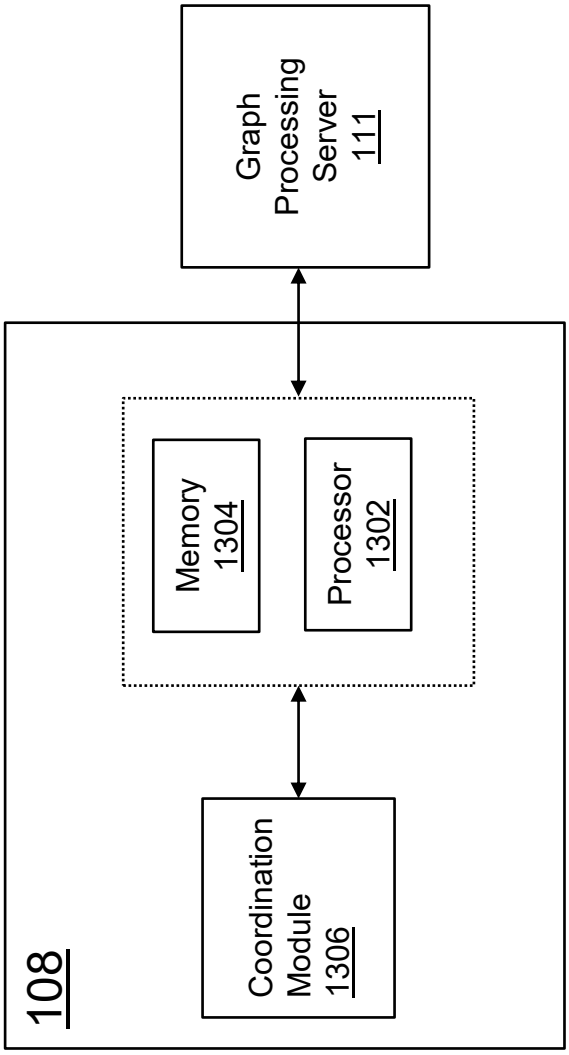
Graph Processing Server 111
Memory 1304
Processor 1302
Coordination Module 1306
108

Figure 13

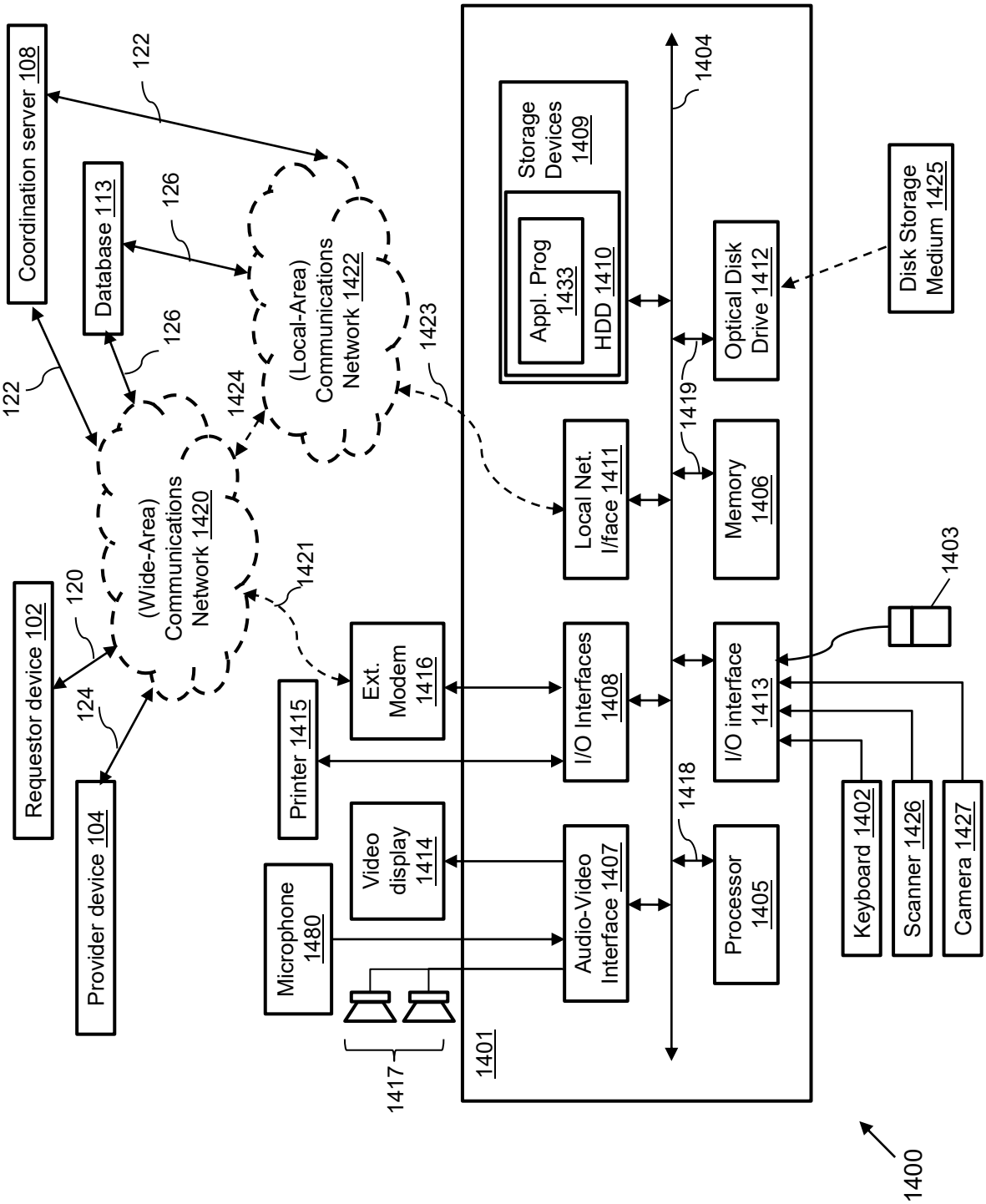
Coordination server 108
122
Database 113
126
126
122
(Local-Area) Communications Network 1422
1424
1423
(Wide-Area) Communications Network 1420
1421
Requestor device 102
120
124
Provider device 104
Printer 1415
Ext. Modem 1416
Video display 1414
Microphone 1480
1417
1401
Audio-Video Interface 1407
I/O Interfaces 1408
Local Net. I/face 1411
Storage Devices 1409
Appl. Prog 1433
HDD 1410
1404
1419
Memory 1406
Optical Disk Drive 1412
Disk Storage Medium 1425
1418
Processor 1405
I/O interface 1413
1403
Keyboard 1402
Scanner 1426
Camera 1427
1400

Figure 14

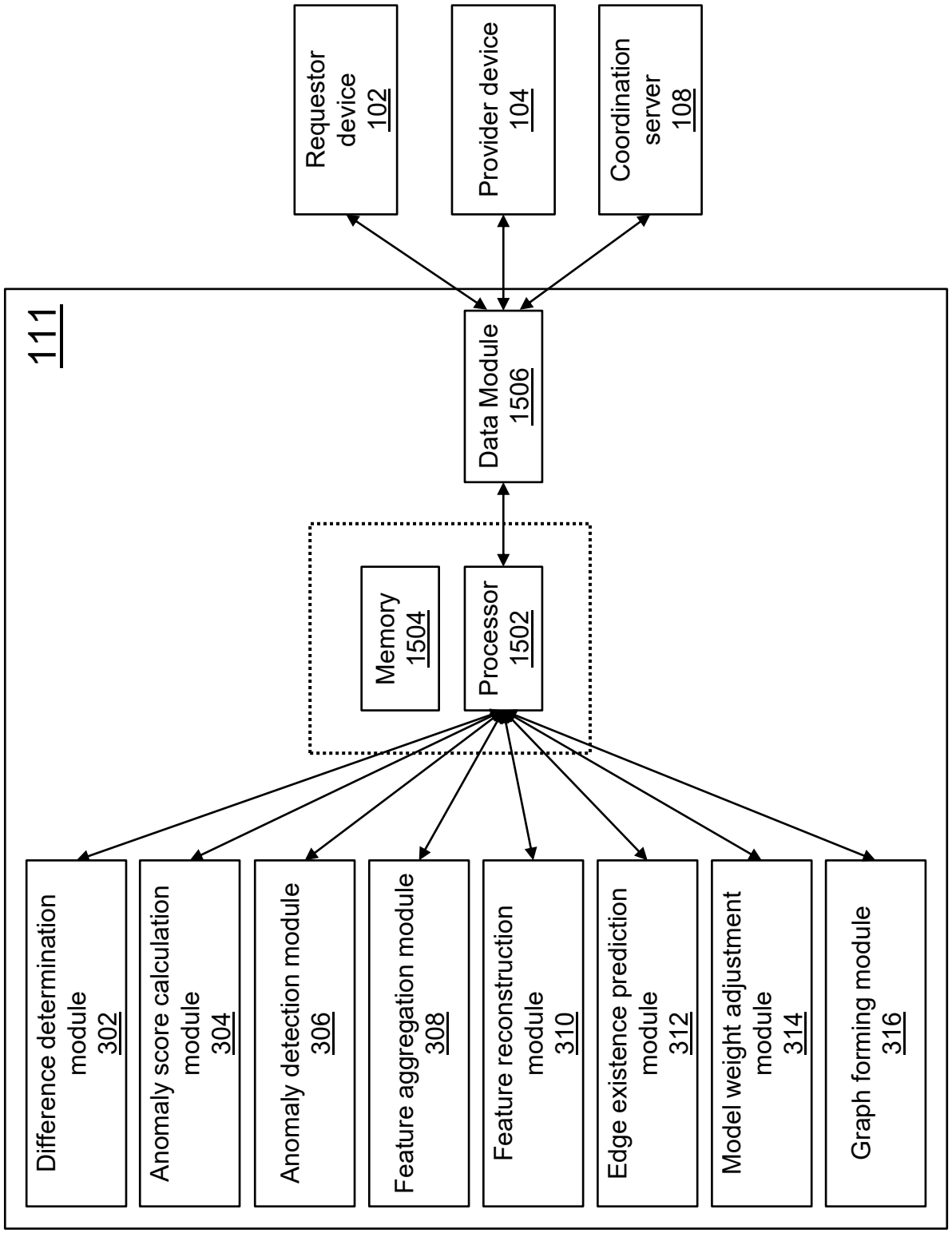
Requestor device 102
Provider device 104
Coordination server 108
111
Data Module 1506
Memory 1504
Processor 1502
Difference determination module 302
Anomaly score calculation module 304
Anomaly detection module 306
Feature aggregation module 308
Feature reconstruction module 310
Edge existence prediction module 312
Model weight adjustment module 314
Graph forming module 316

Figure 15

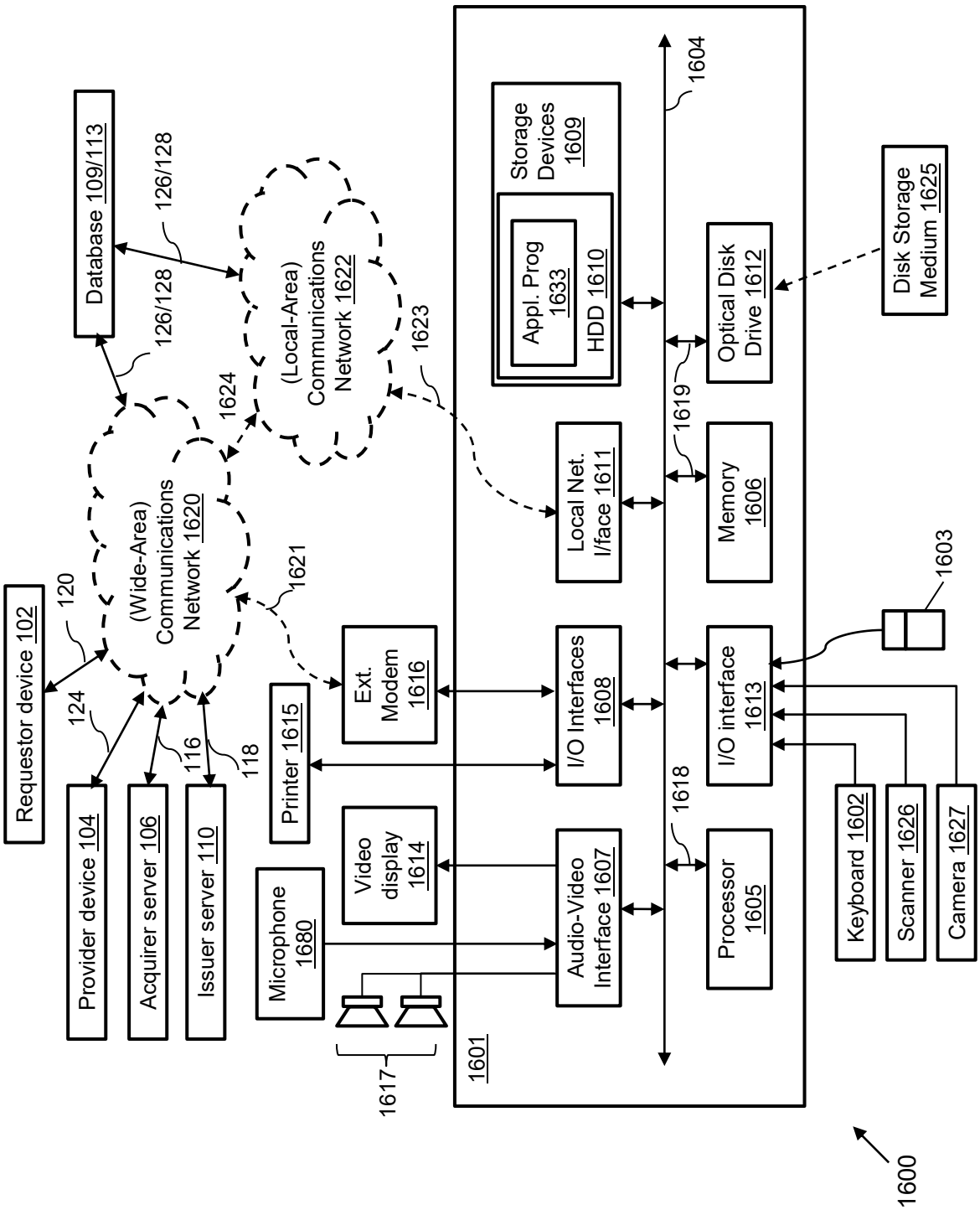
Requestor device 102
120
Provider device 104
Acquirer server 106
Issuer server 110
124
116
118
(Wide-Area) Communications Network 1620
1621
Database 109/113
126/128
126/128
1624
(Local-Area) Communications Network 1622
1623
Printer 1615
Ext. Modem 1616
Video display 1614
Microphone 1680
1617
Audio-Video Interface 1607
I/O Interfaces 1608
Local Net. I/face 1611
Storage Devices 1609
Appl. Prog 1633
HDD 1610
1604
1619
Memory 1606
Optical Disk Drive 1612
Disk Storage Medium 1625
1603
1618
Processor 1605
I/O interface 1613
Keyboard 1602
Scanner 1626
Camera 1627
1601
1600

Figure 16

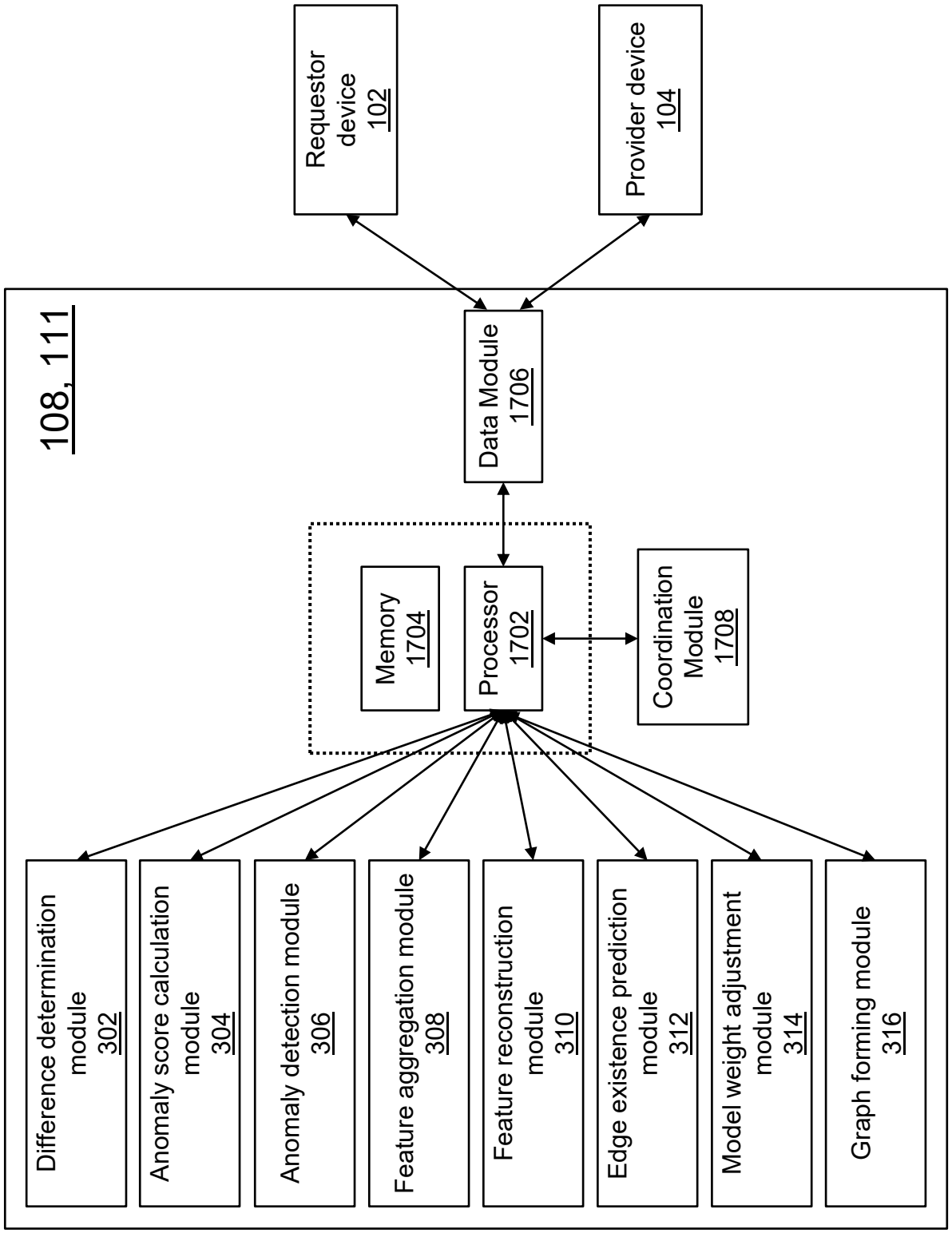
Requestor device 102
Provider device 104
108, 111
Data Module 1706
Memory 1704
Processor 1702
Coordination Module 1708
Difference determination module 302
Anomaly score calculation module 304
Anomaly detection module 306
Feature aggregation module 308
Feature reconstruction module 310
Edge existence prediction module 312
Model weight adjustment module 314
Graph forming module 316

Figure 17

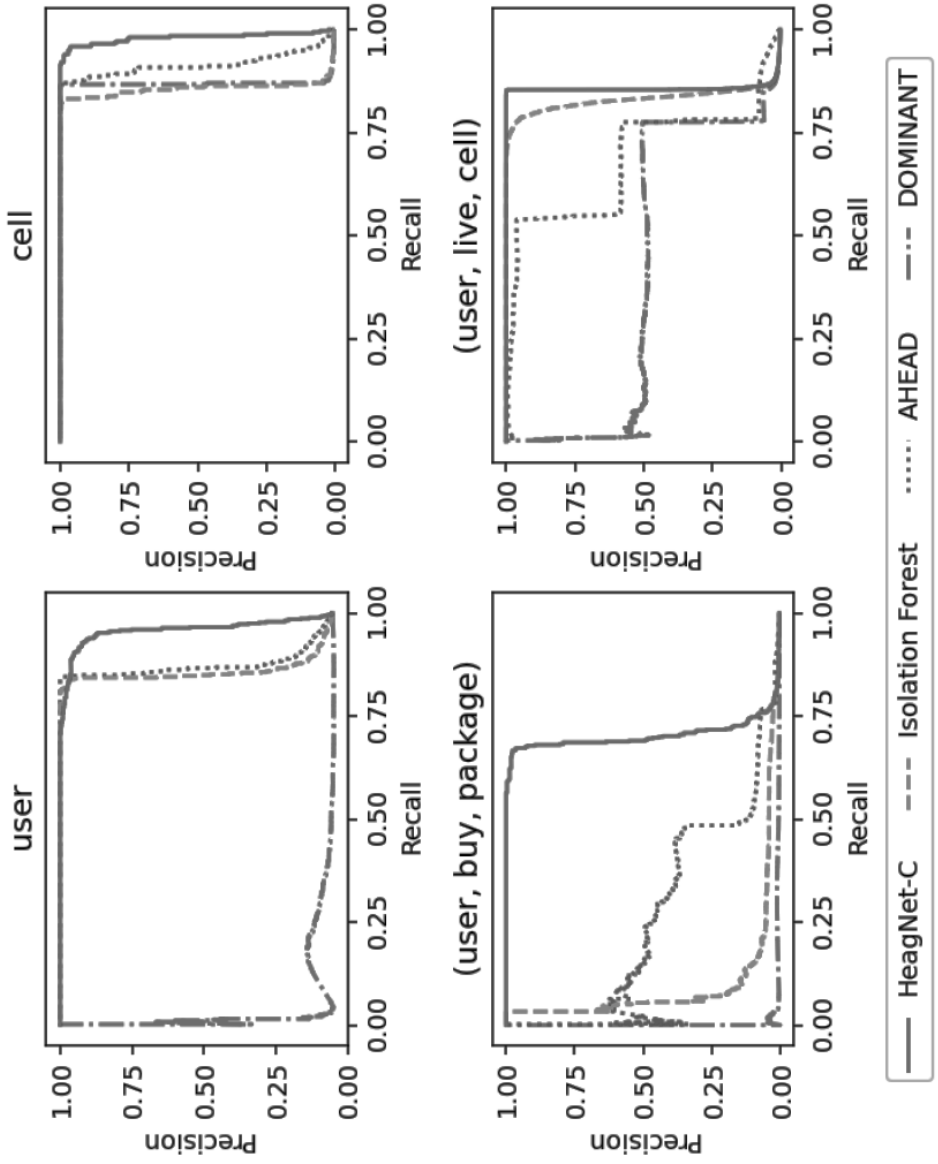

Telecom-Small

Figure 18

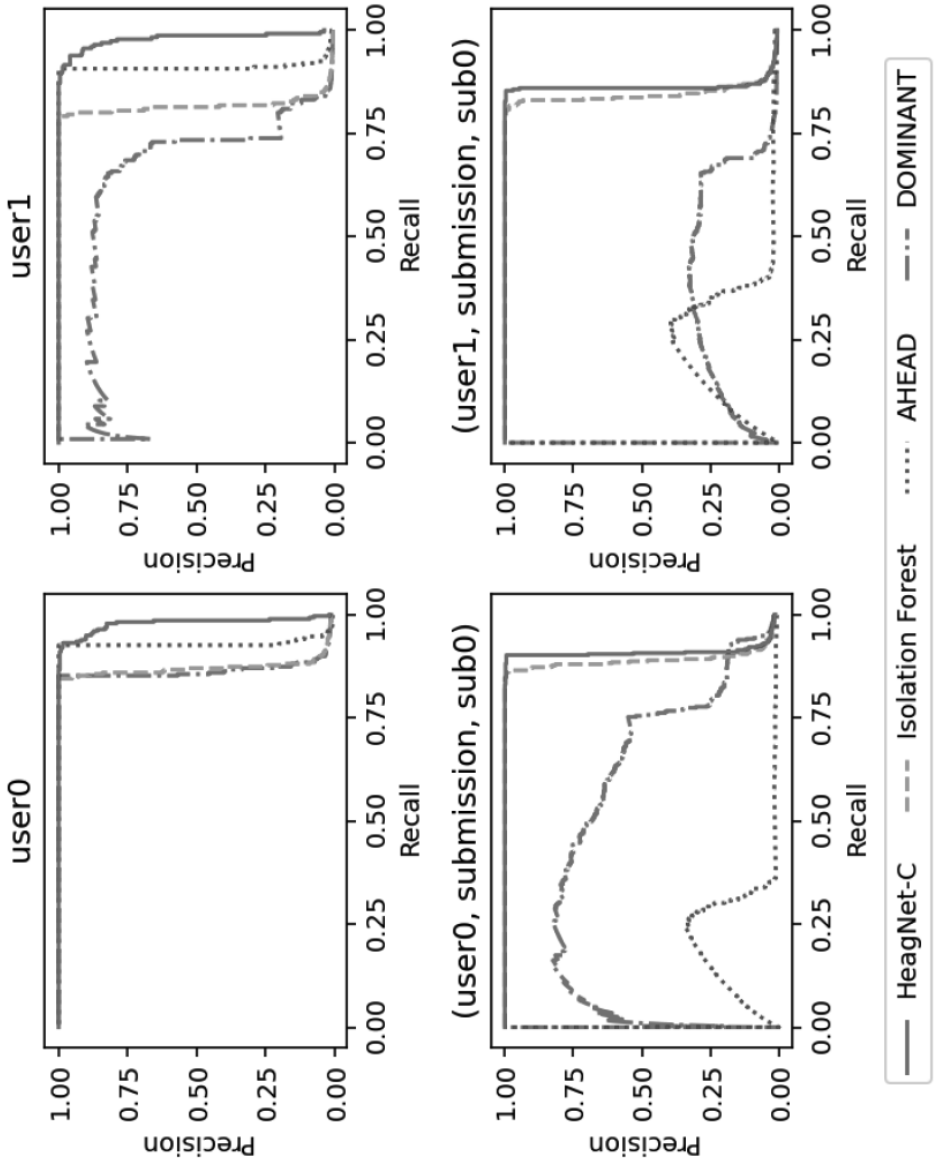

Reddit

Figure 19

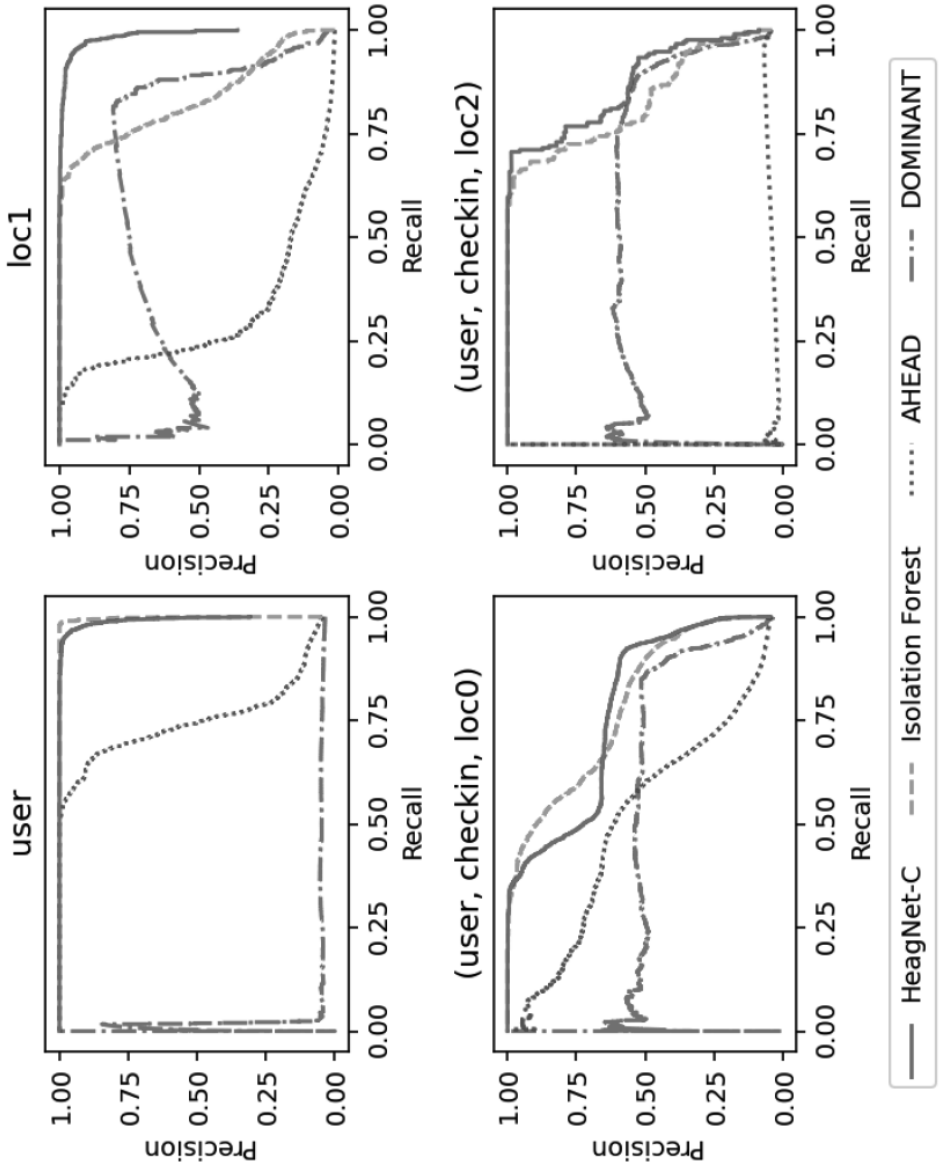

Brightkite

Figure 20

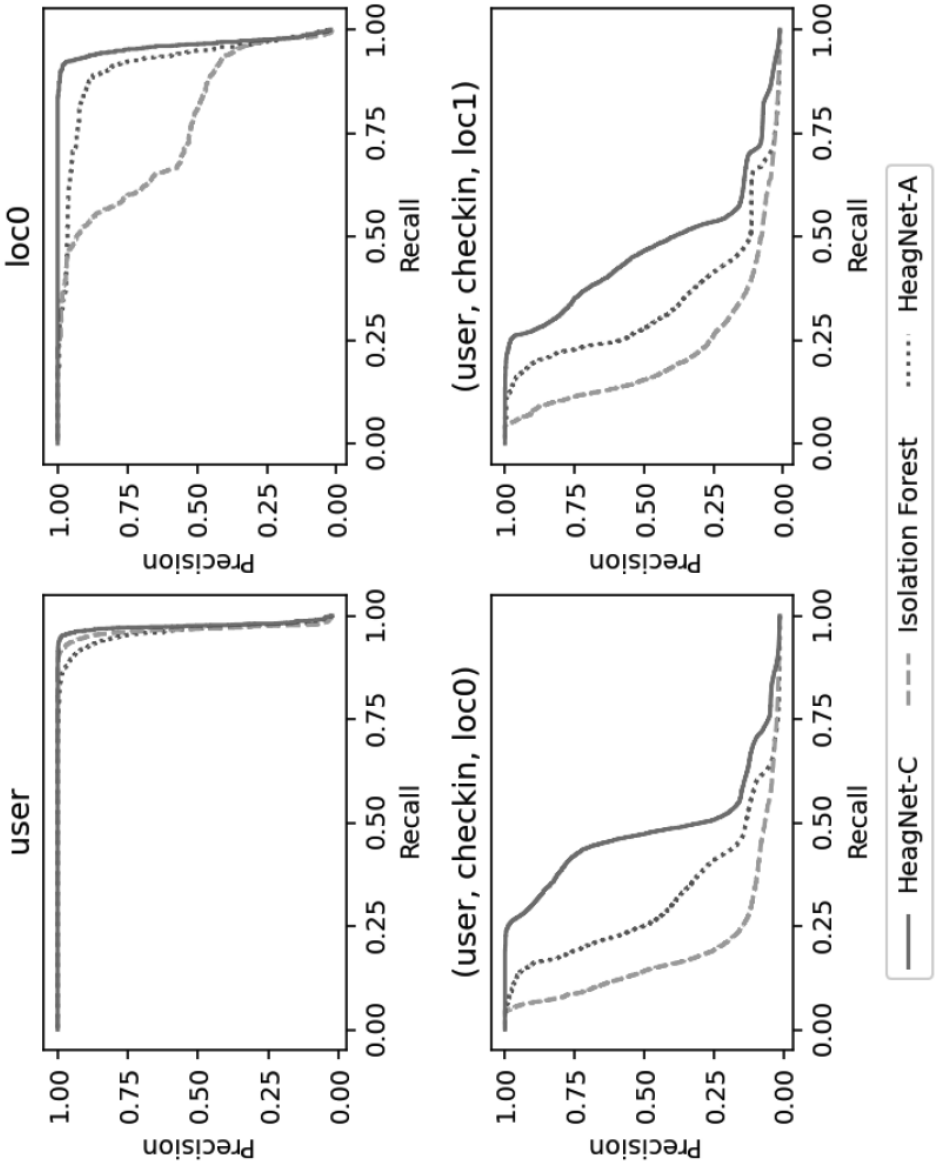

Gowalla

Figure 21

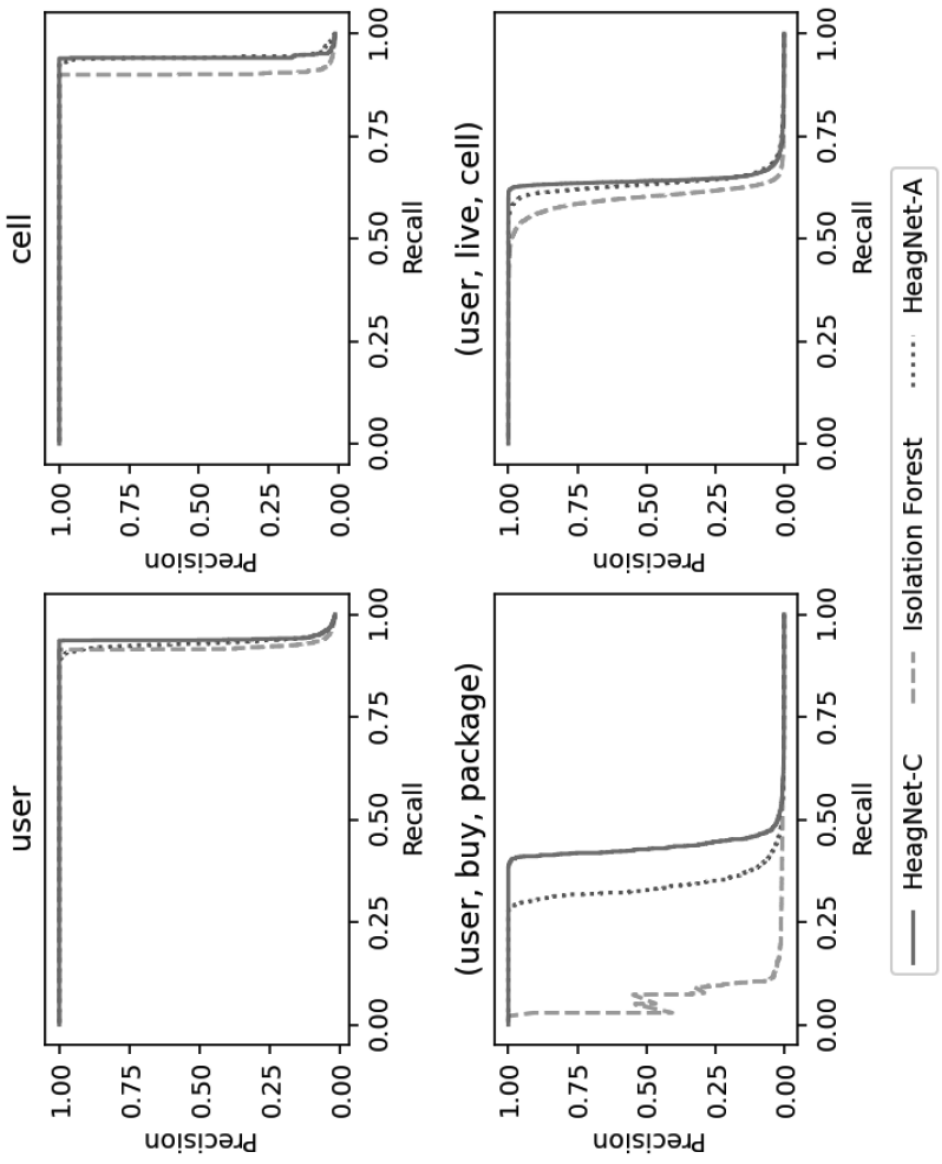

Telecom-Large

Figure 22