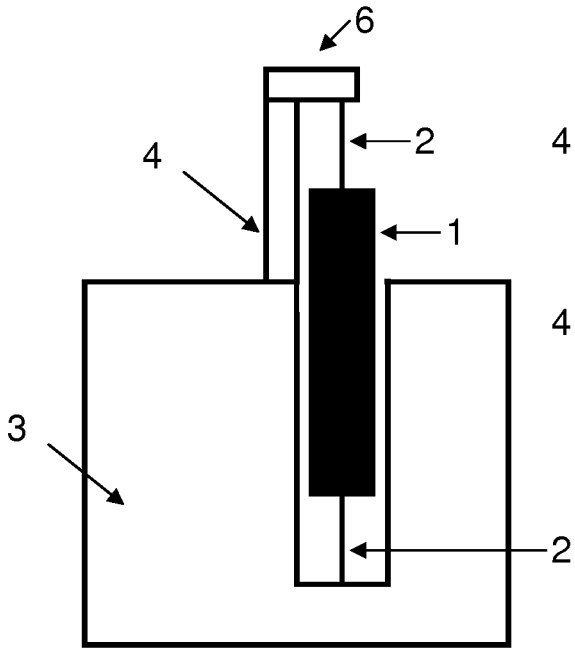


Figure 3A

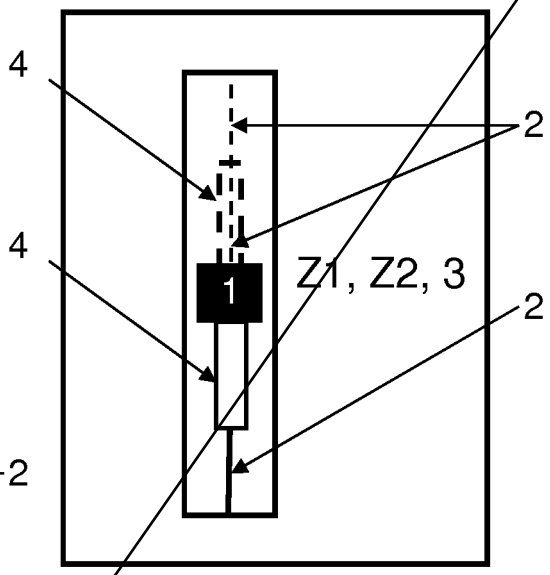


Figure 3B

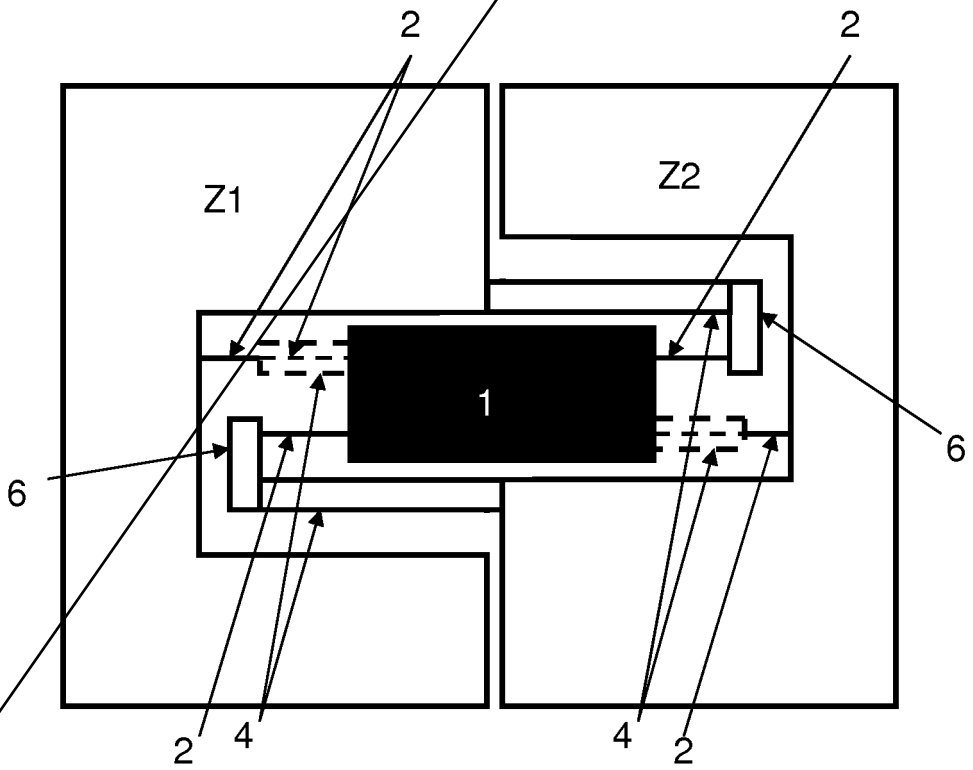


Figure 4

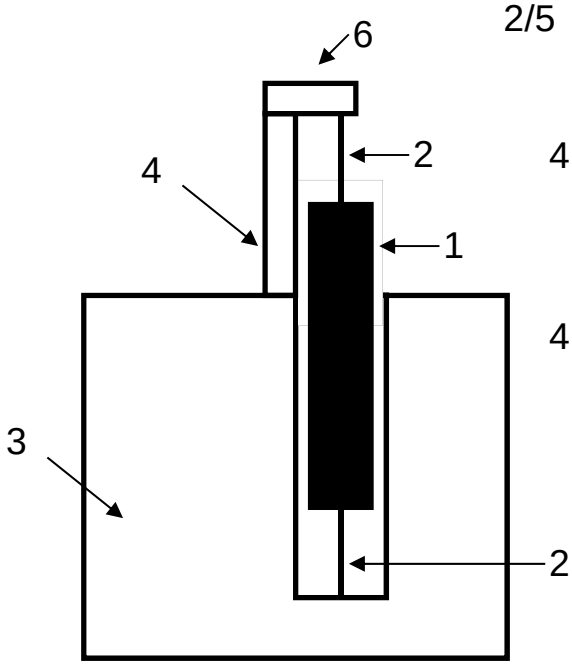


Figure 3A

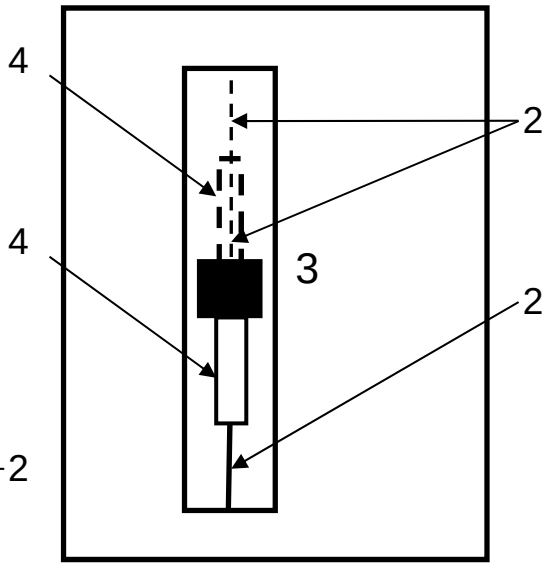


Figure 3B

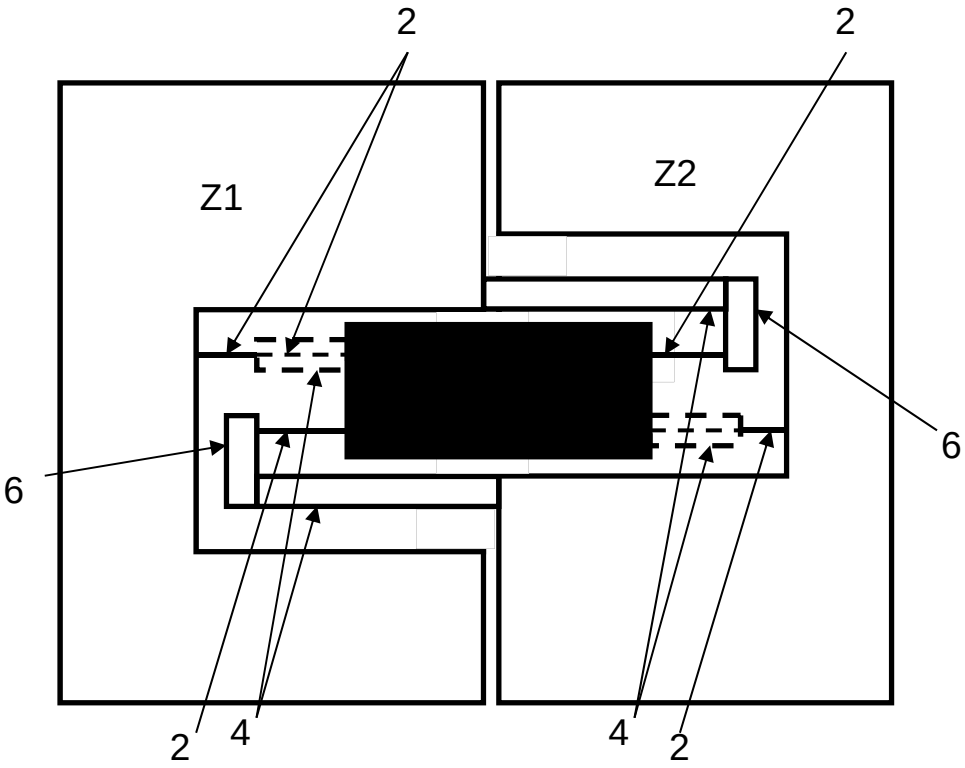


Figure 4

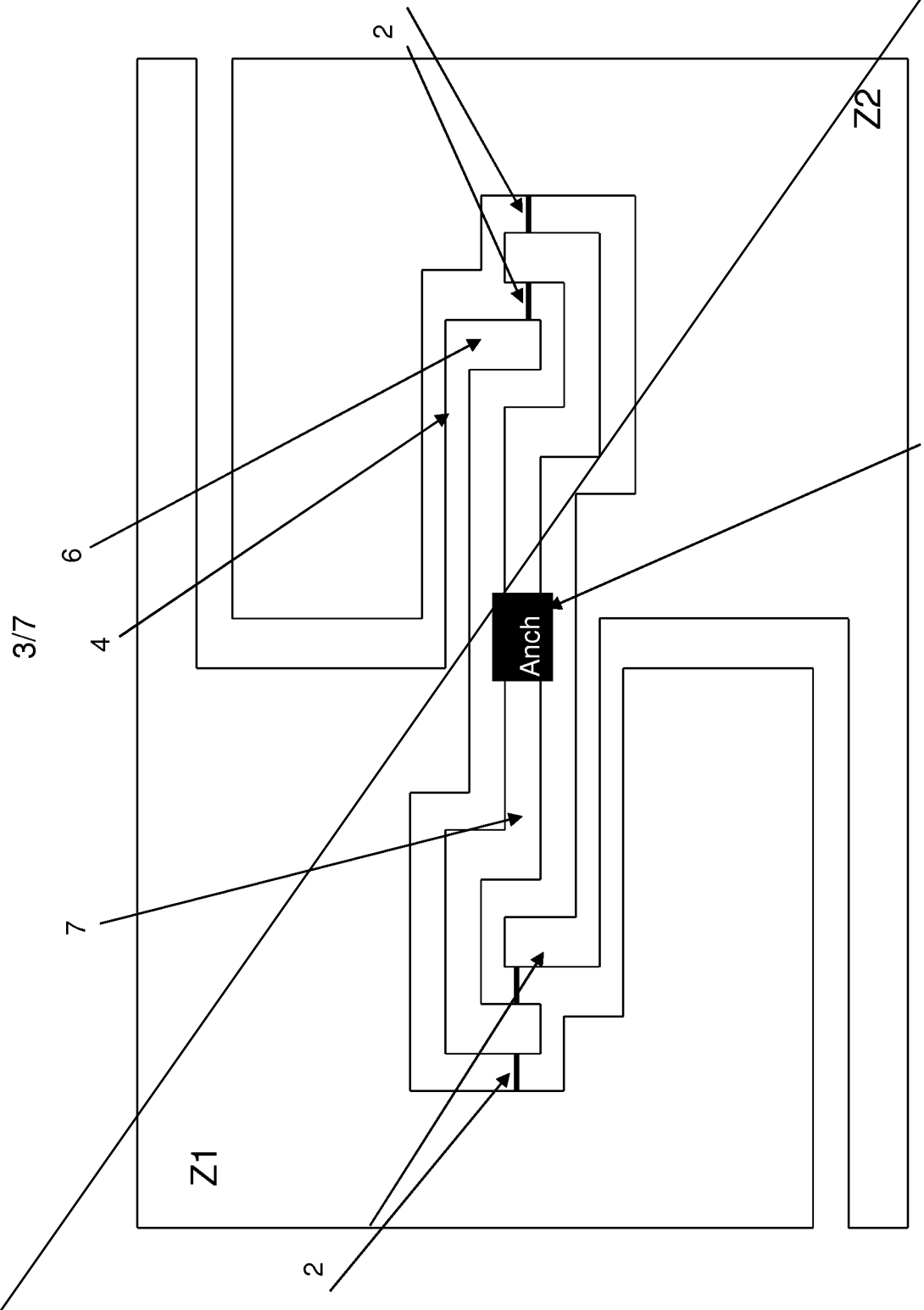


Figure 6

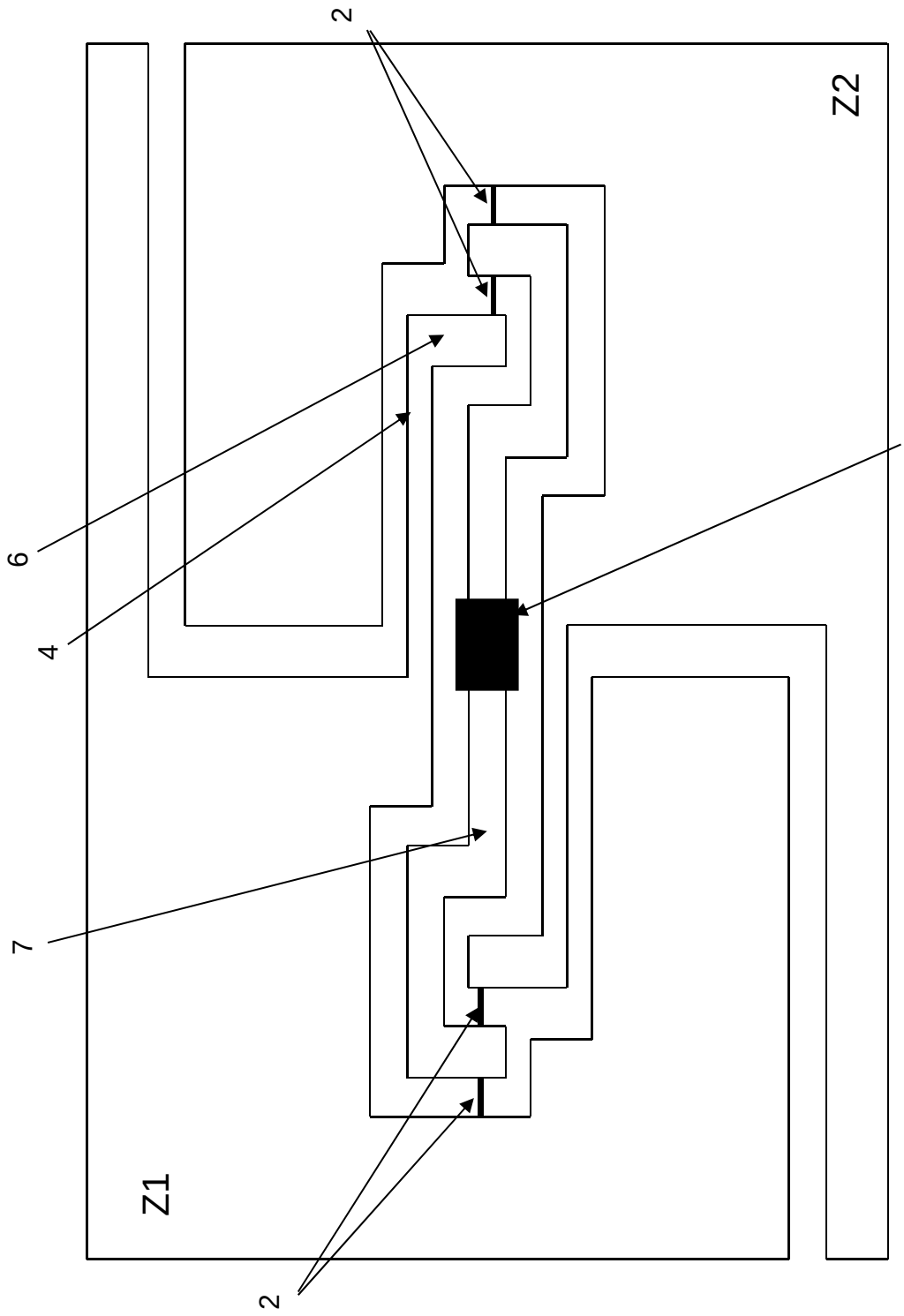


Figure 6