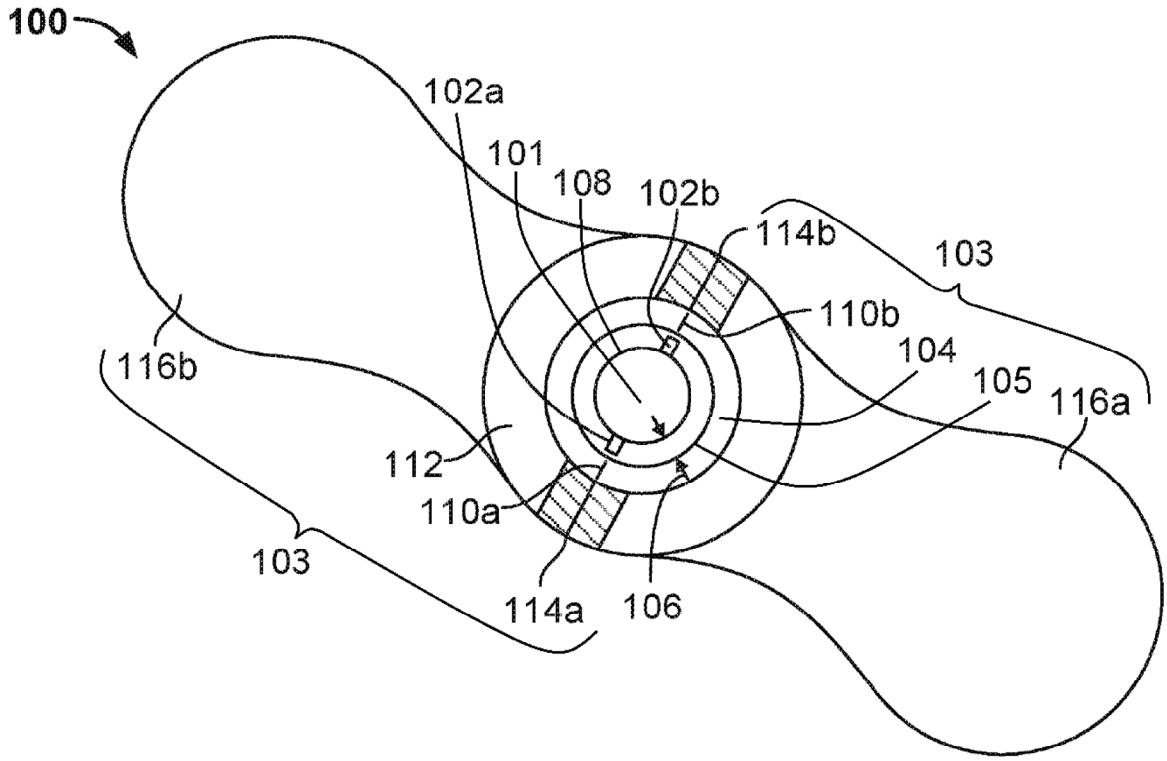
100
102a
101
108
102b
114b
103
110b
104
105
116a
116b
112
110a
103
114a
106

FIG. 1A

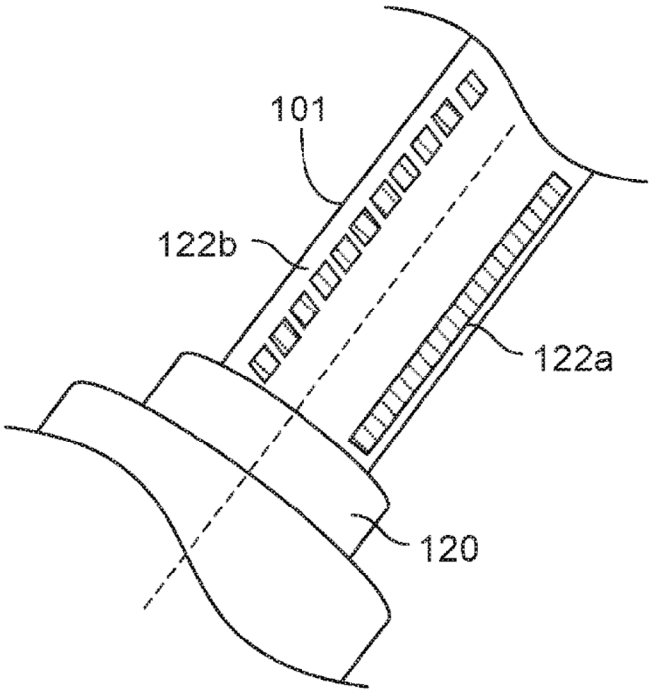
101
122b
122a
120

FIG. 1B

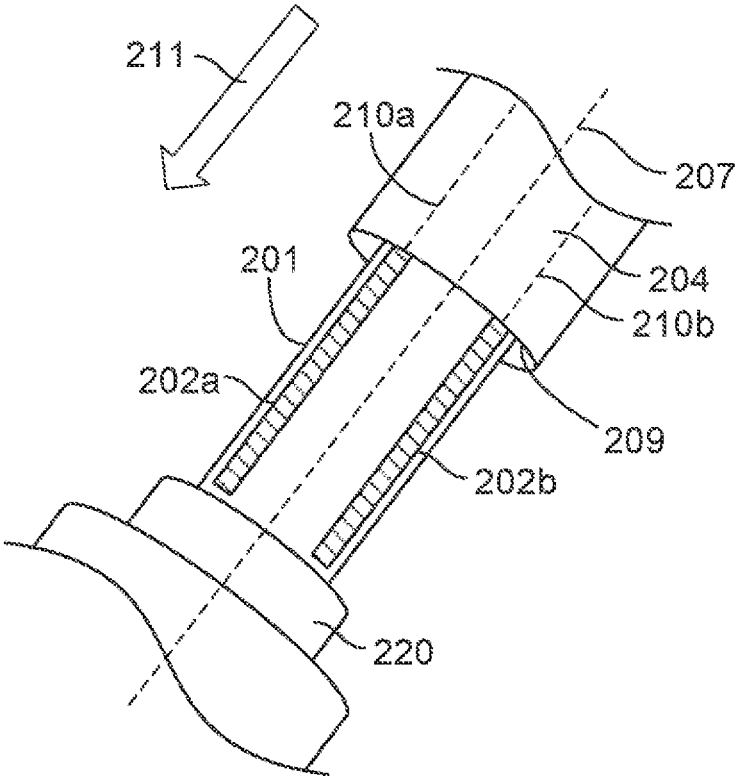

FIG. 2

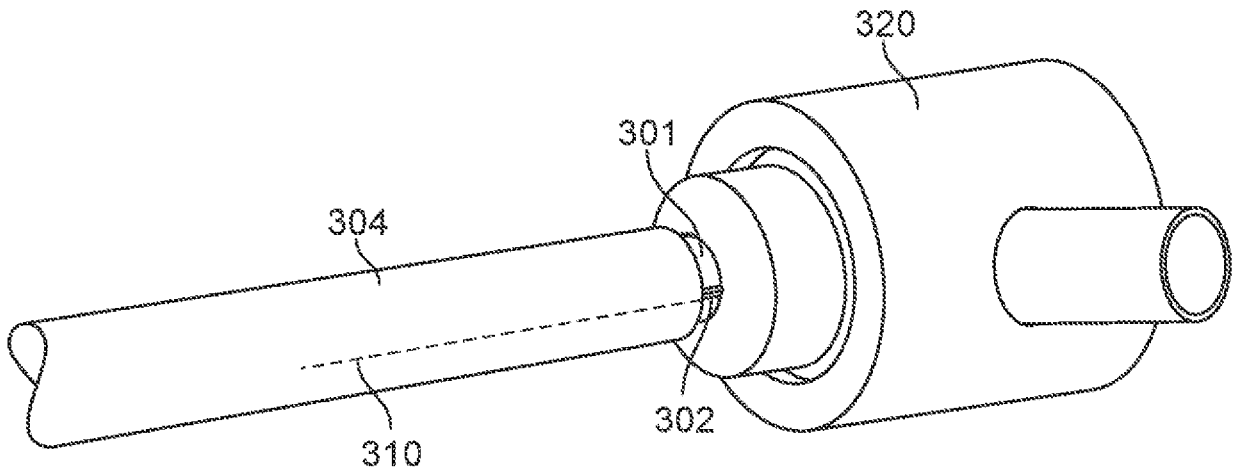

FIG. 3

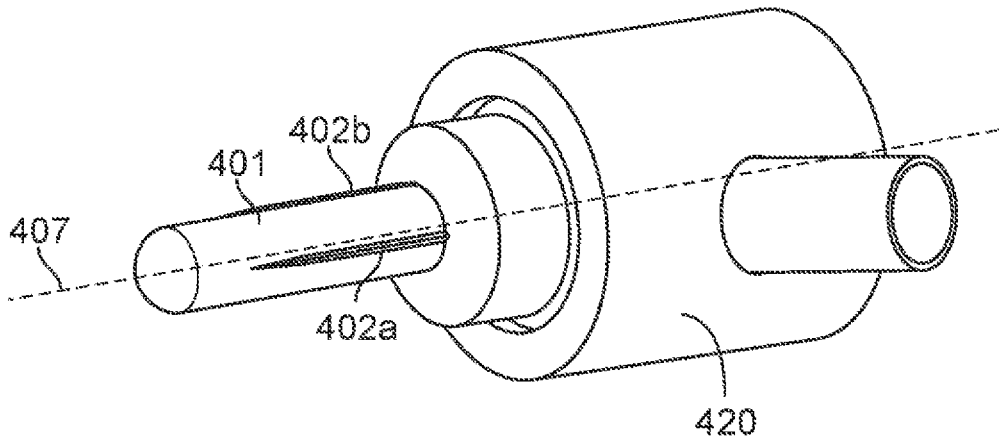

FIG. 4

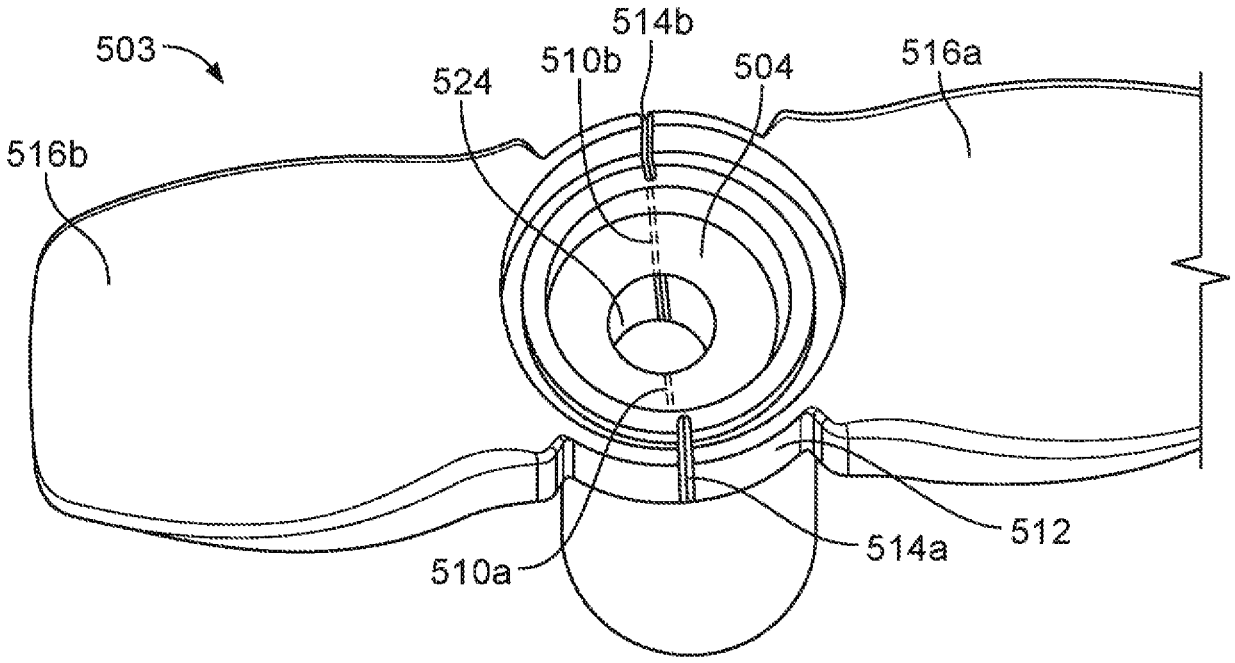
503
514b
524
510b
504
516a
516b
510a
514a
512

FIG. 5

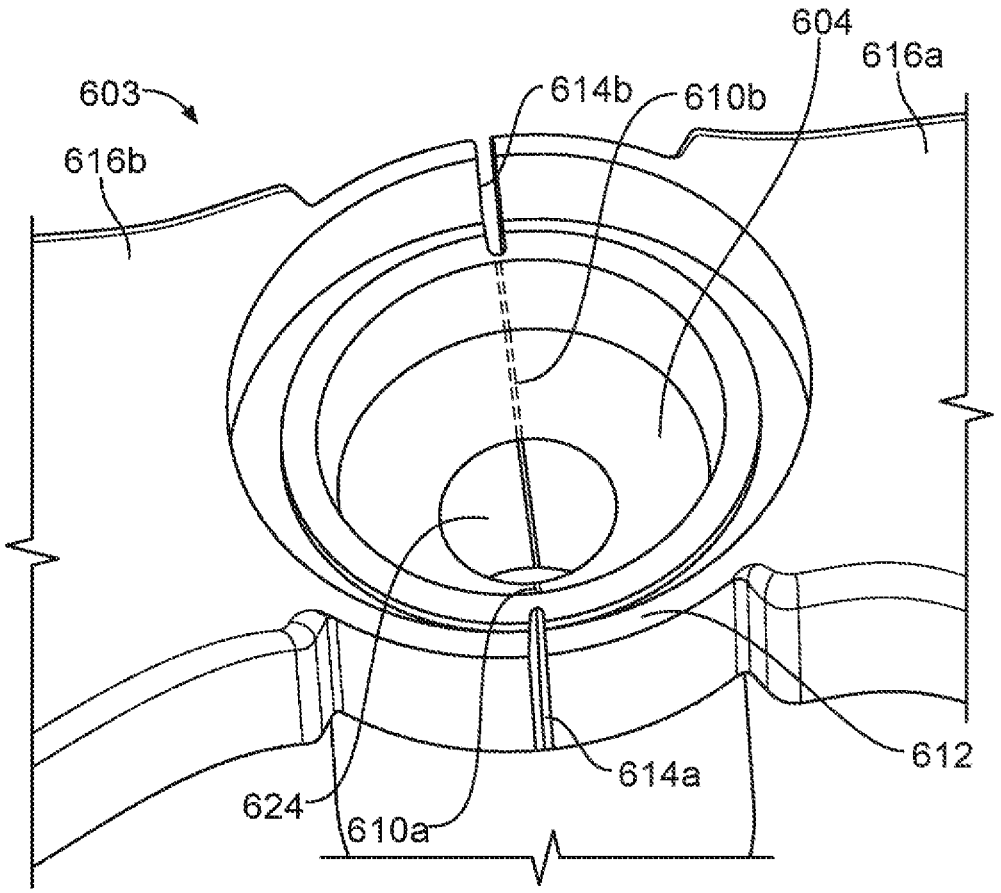
604
616a
603
614b
610b
616b
612
614a
624
610a

FIG. 6

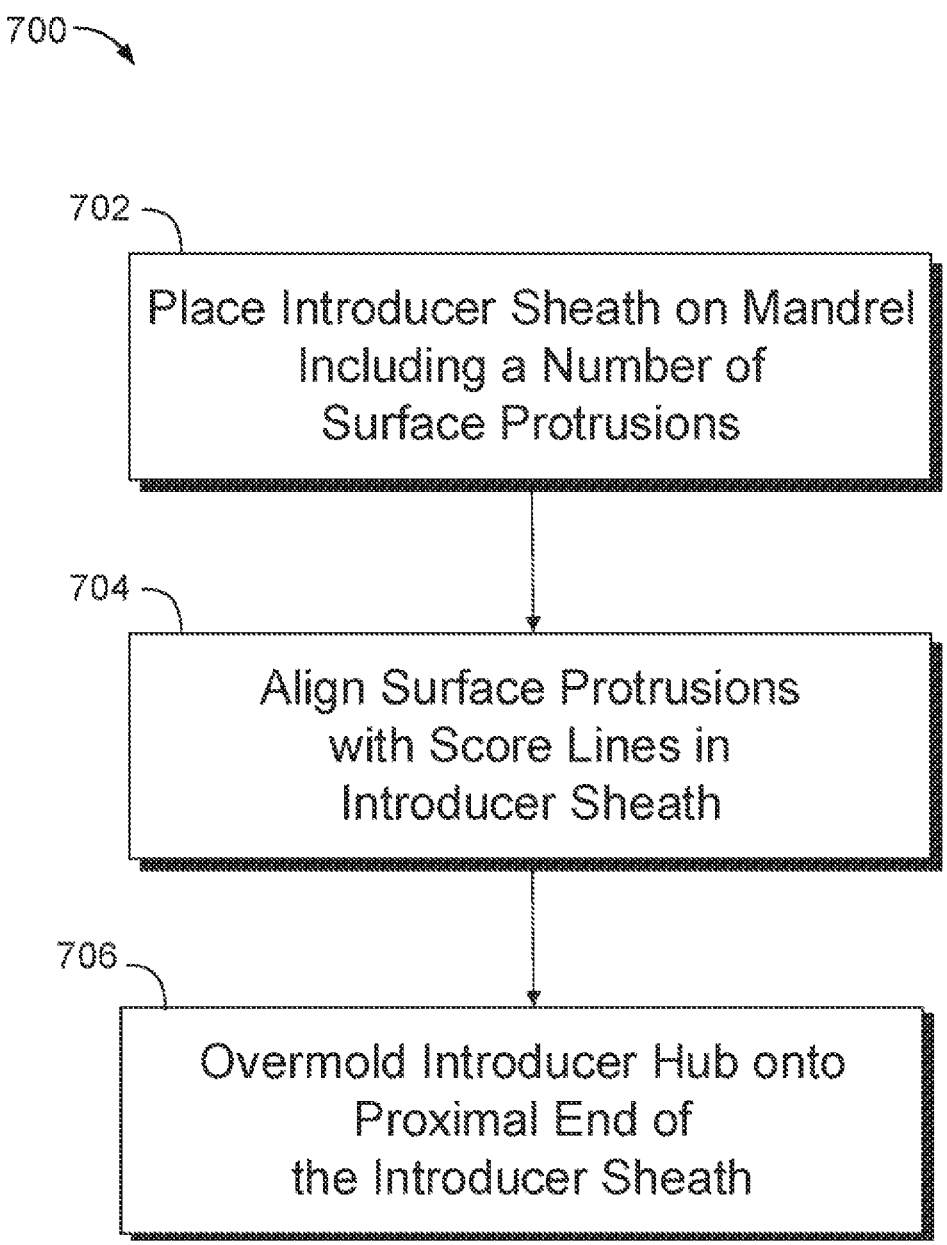
700
702
Place Introducer Sheath on Mandrel Including a Number of Surface Protrusions
704
Align Surface Protrusions with Score Lines in Introducer Sheath
706
Overmold Introducer Hub onto Proximal End of the Introducer Sheath

FIG. 7