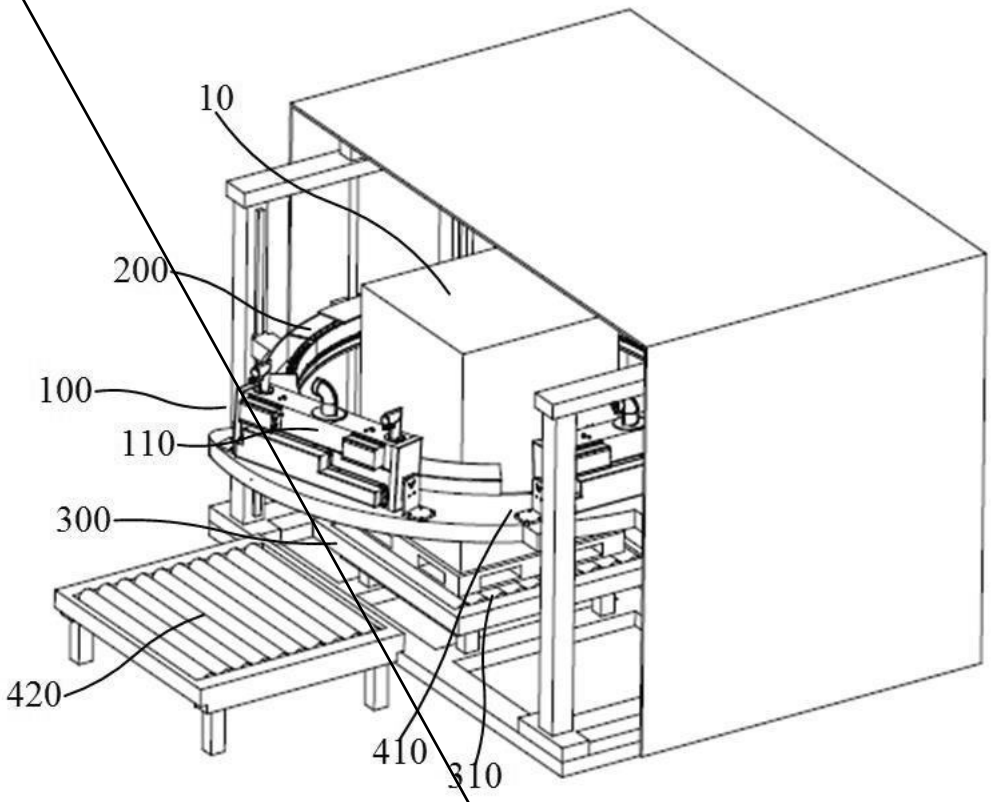

FIG. 1

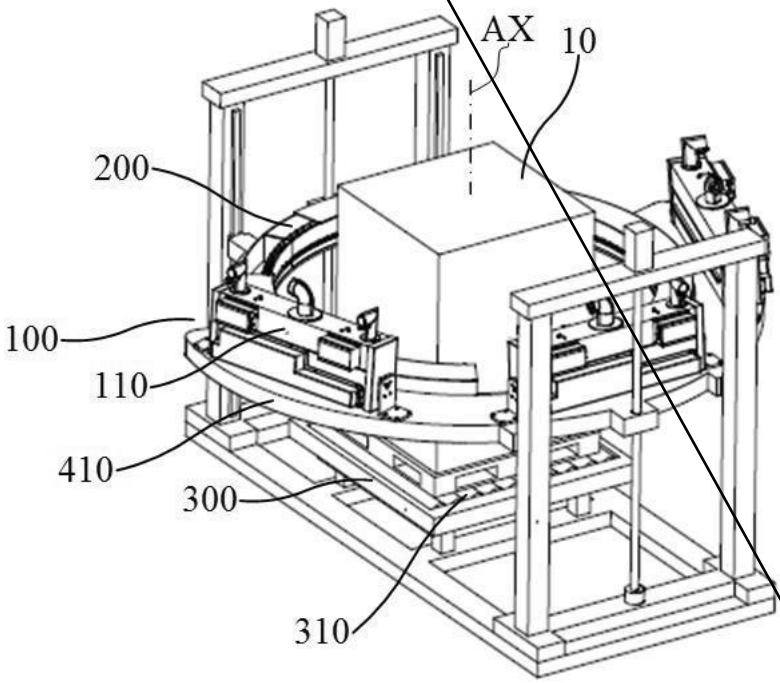

FIG. 2

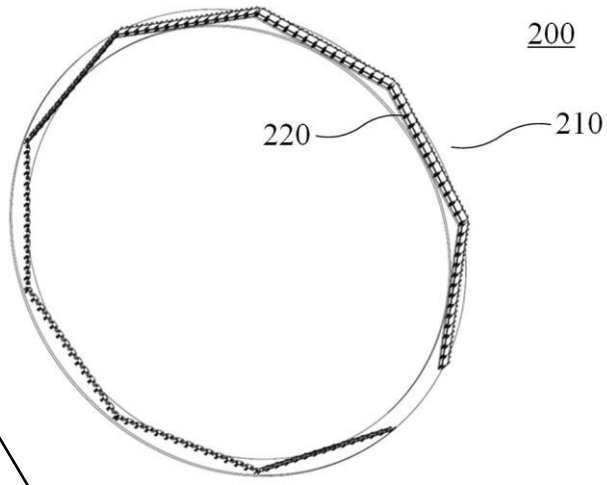

FIG. 3

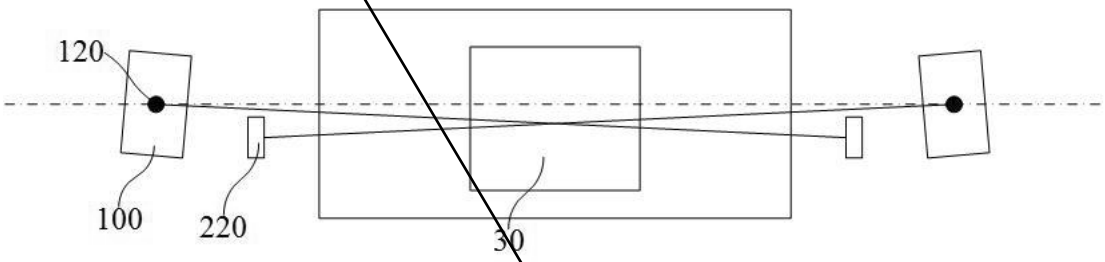

FIG. 4

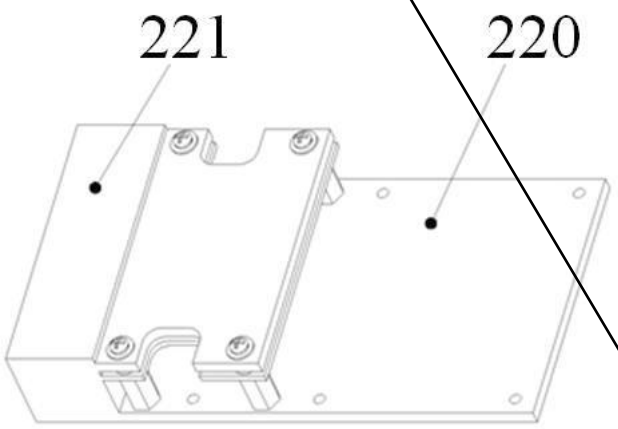

FIG. 5

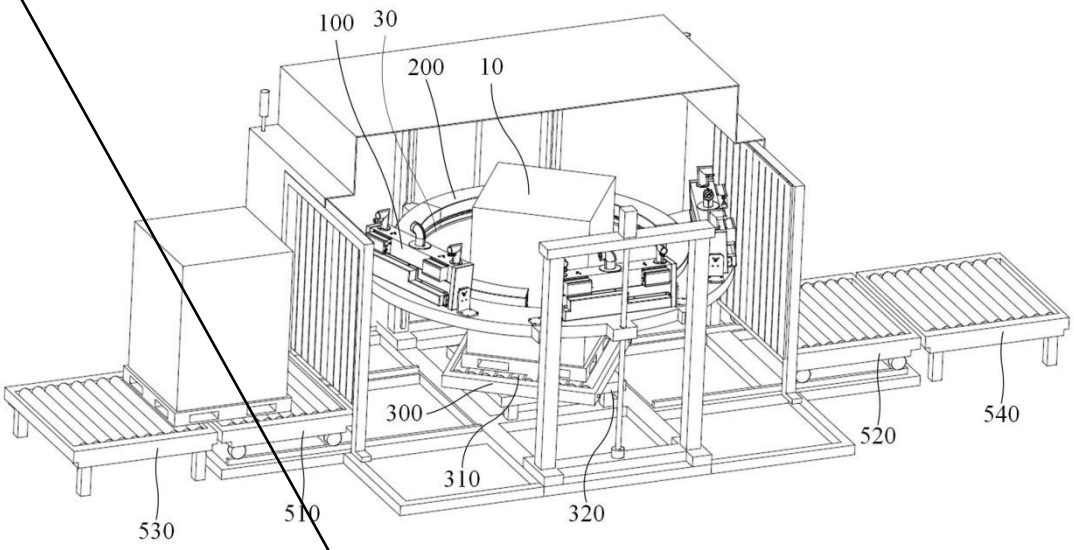

FIG. 6

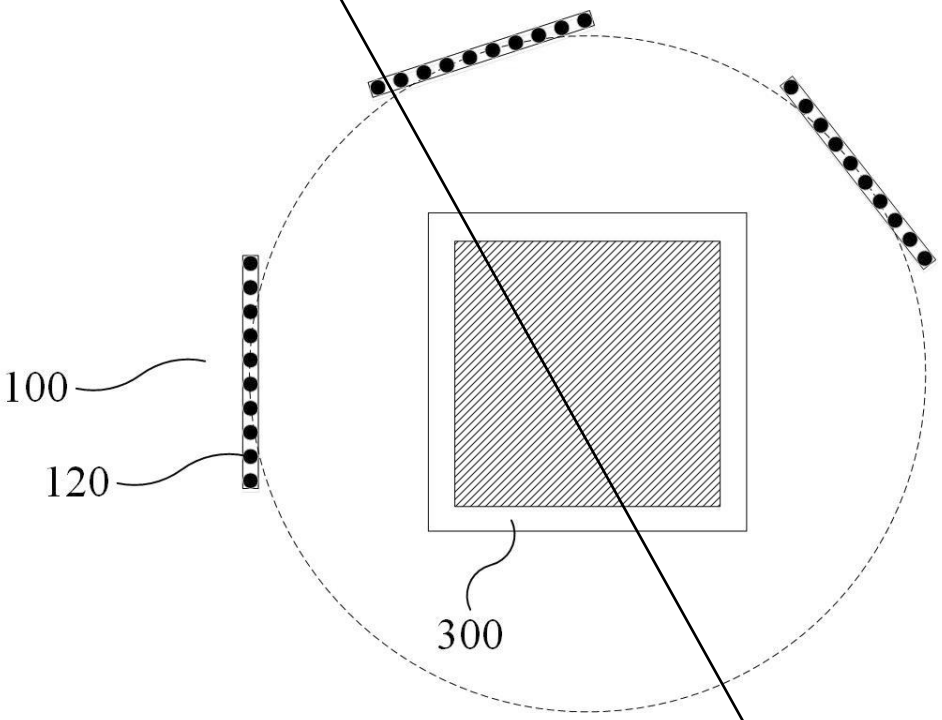

FIG. 7A

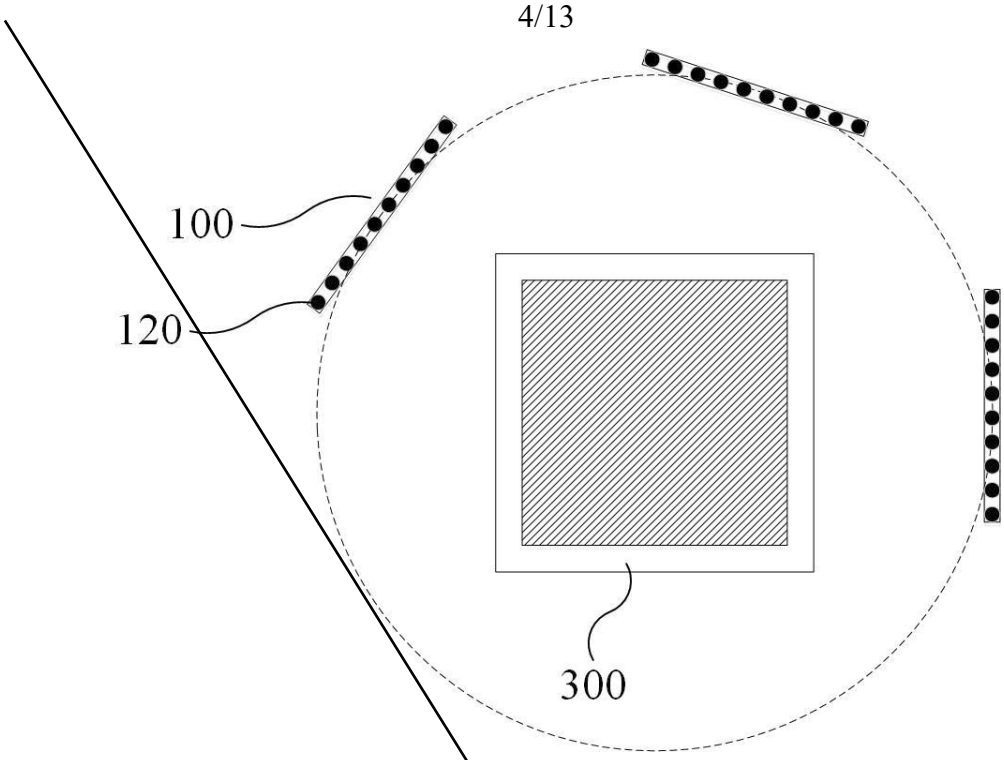

FIG. 7B

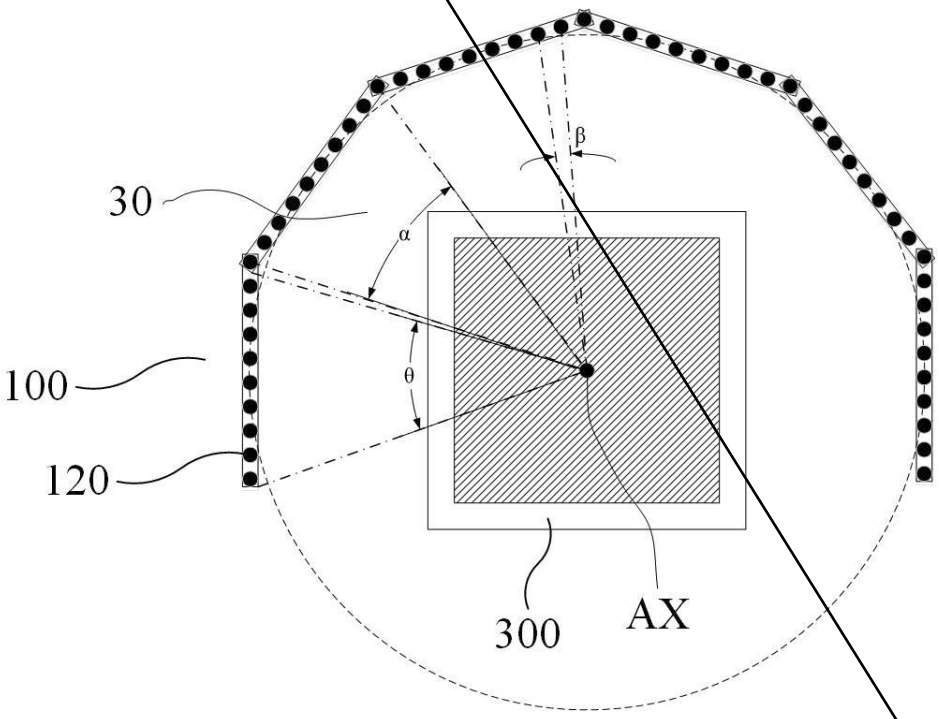

FIG. 7C

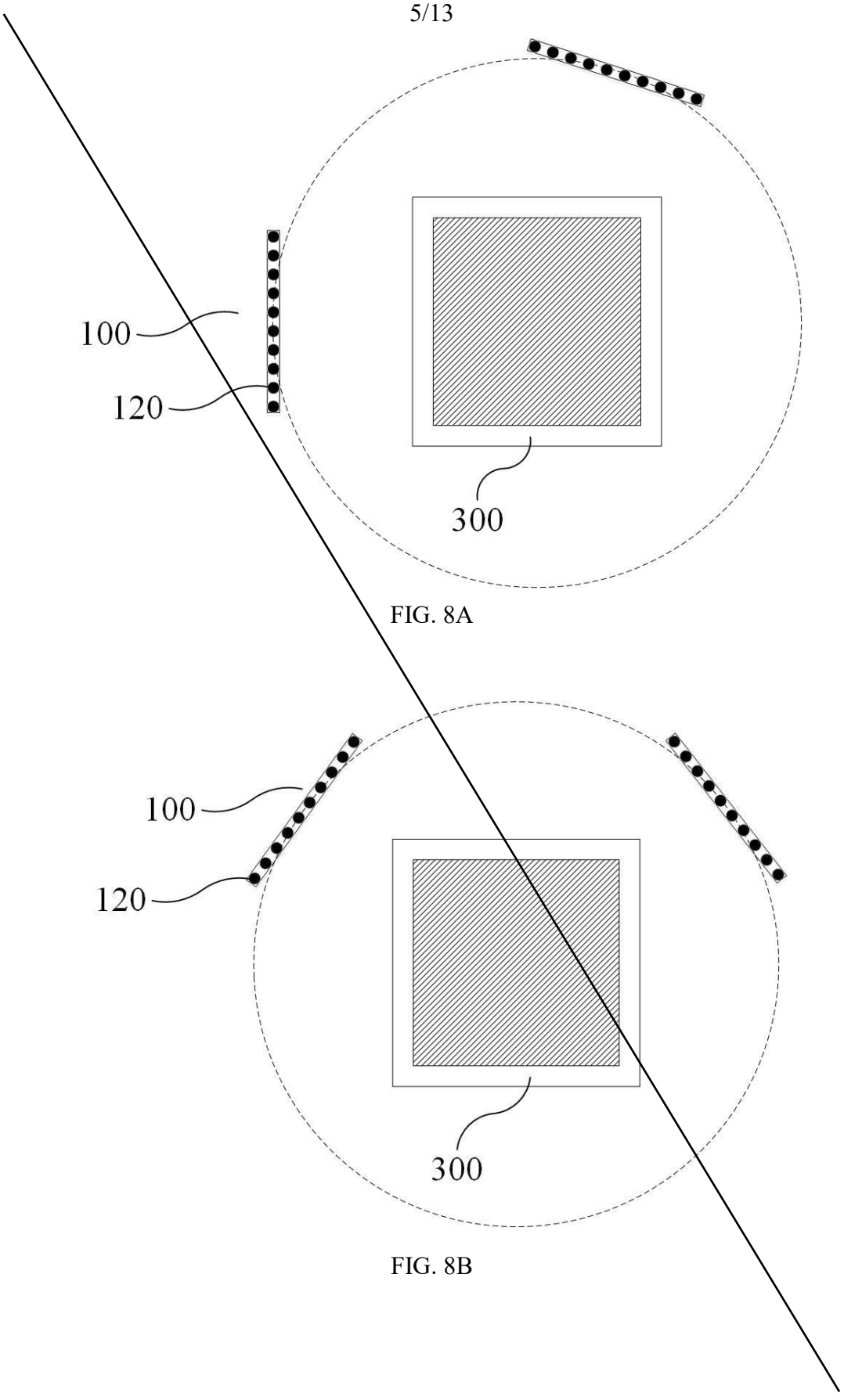

FIG. 8A

FIG. 8B

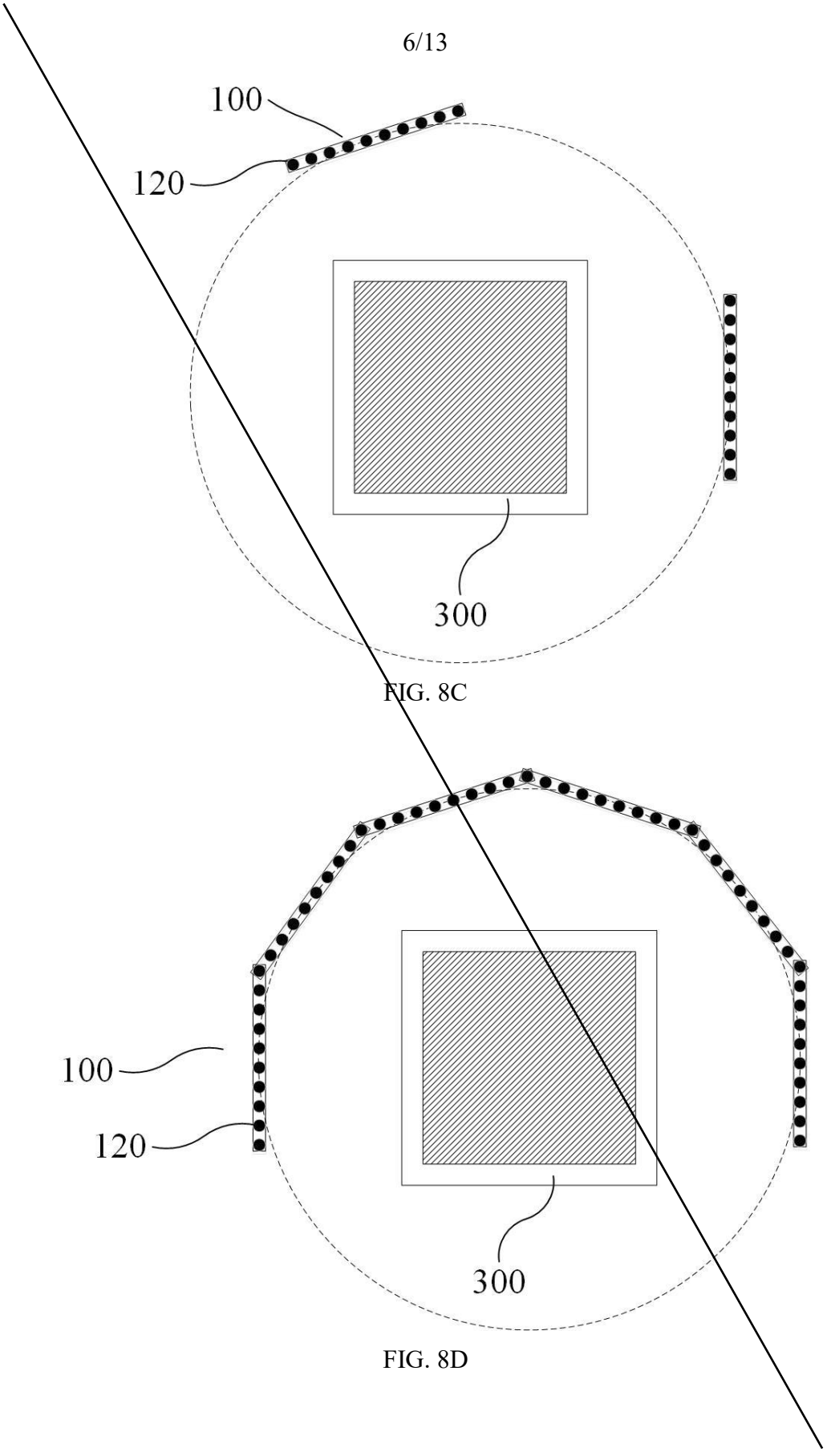

FIG. 8C

FIG. 8D

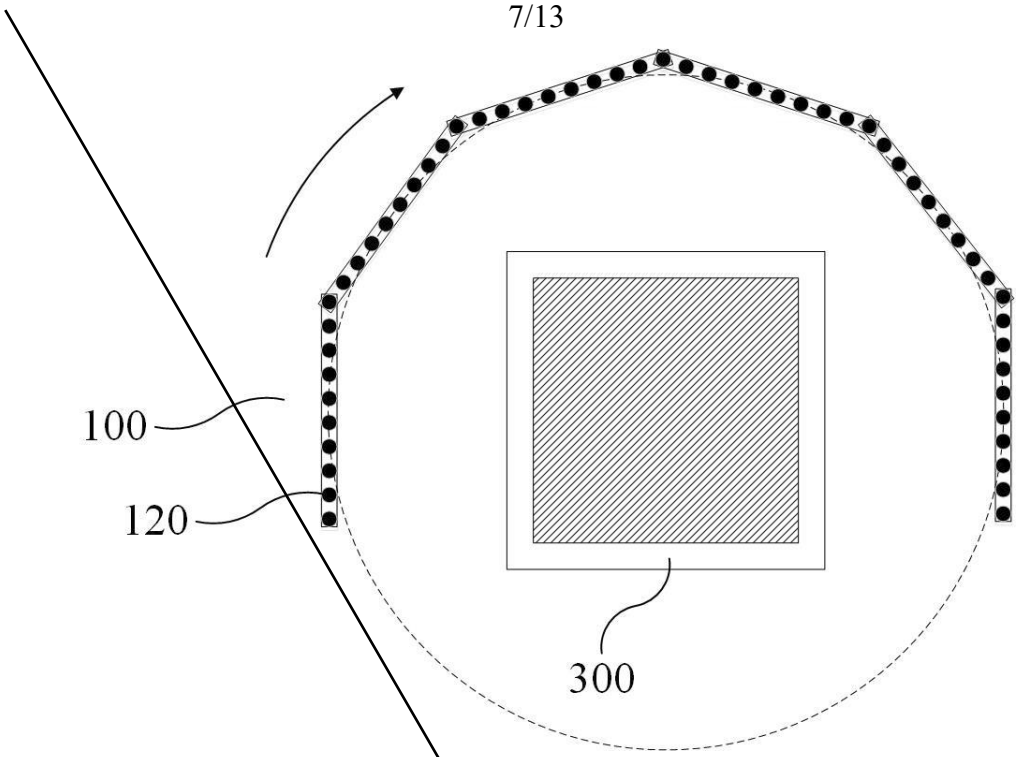

FIG. 9

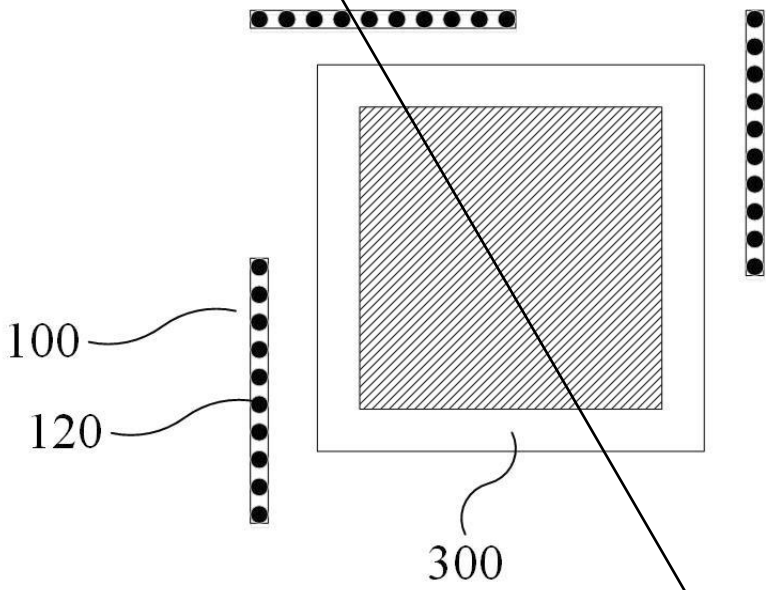

FIG. 10A

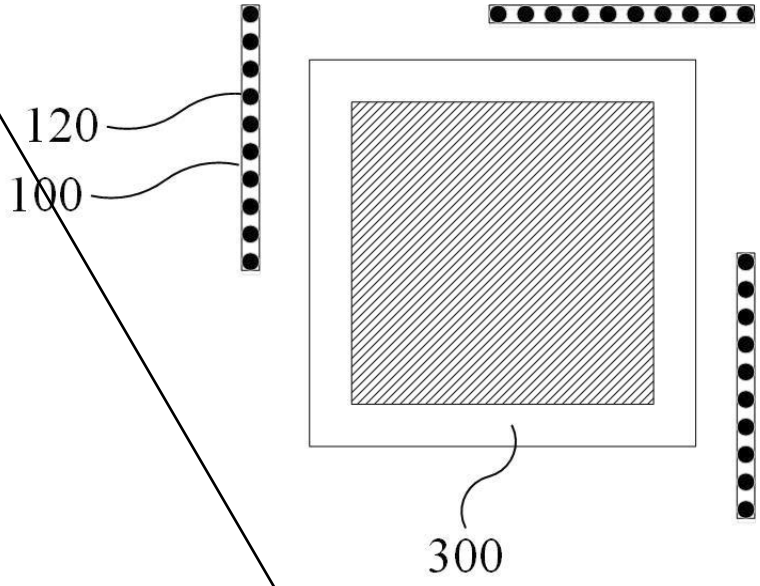

FIG. 10B

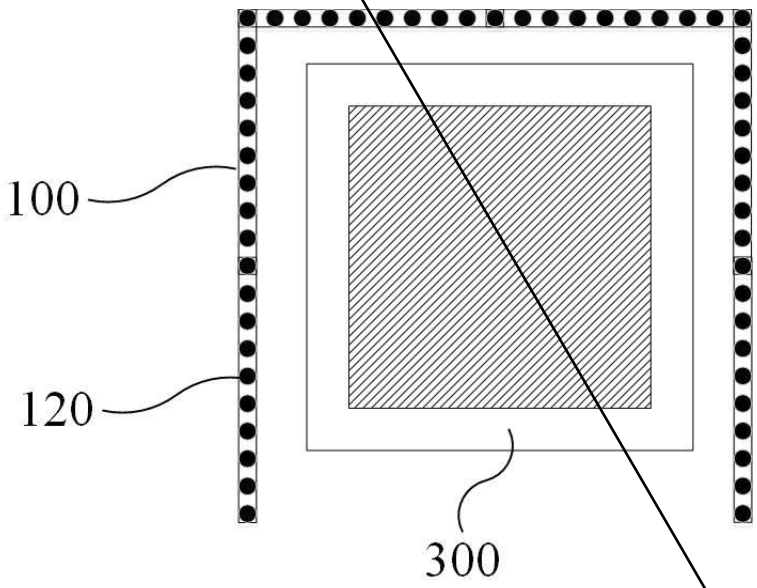

FIG. 10C

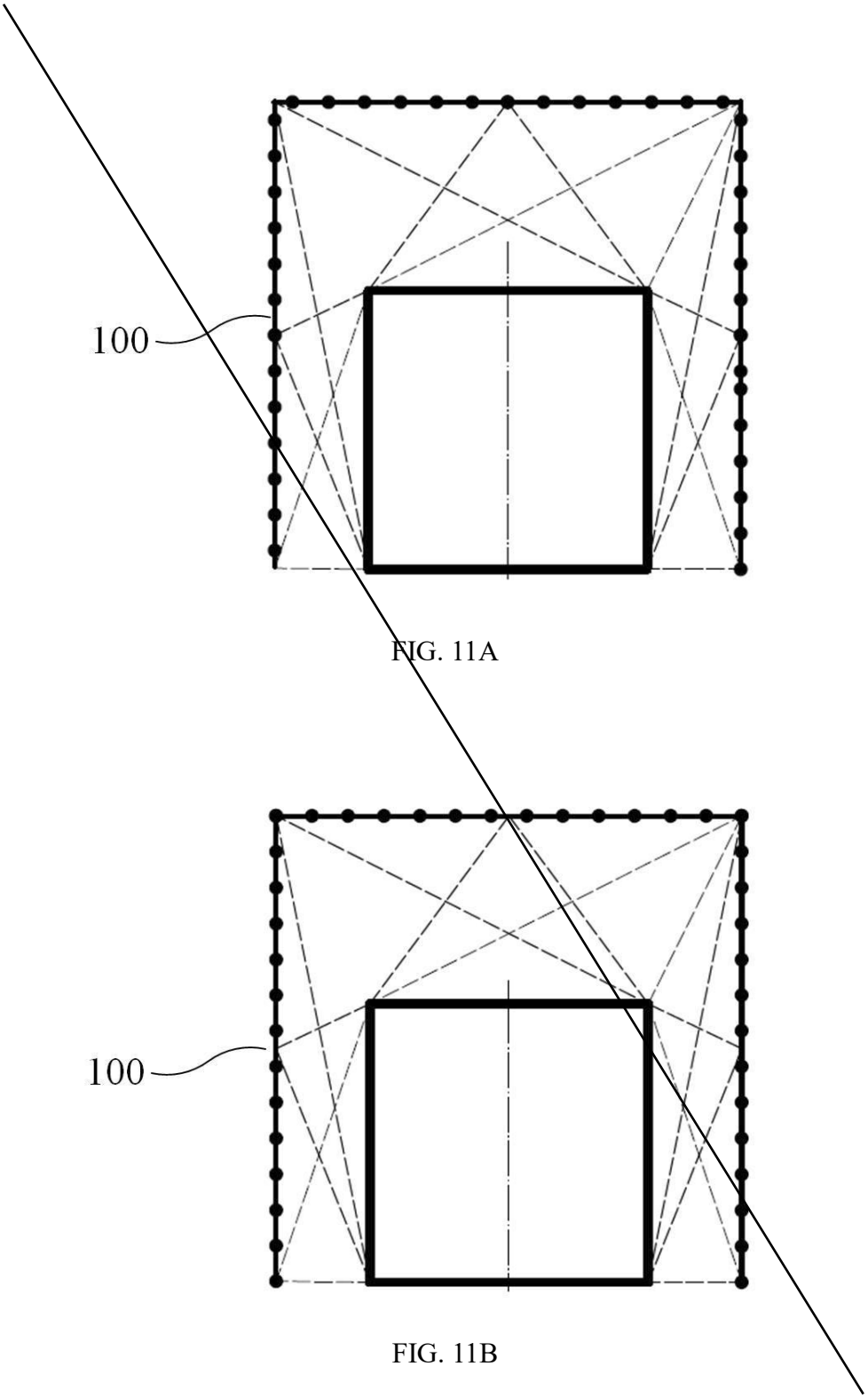

FIG. 11A

FIG. 11B

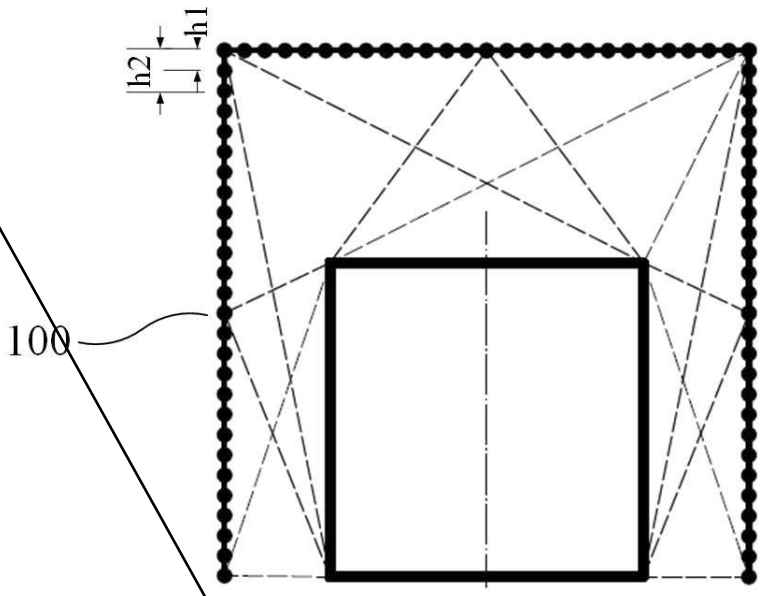

FIG. 11C

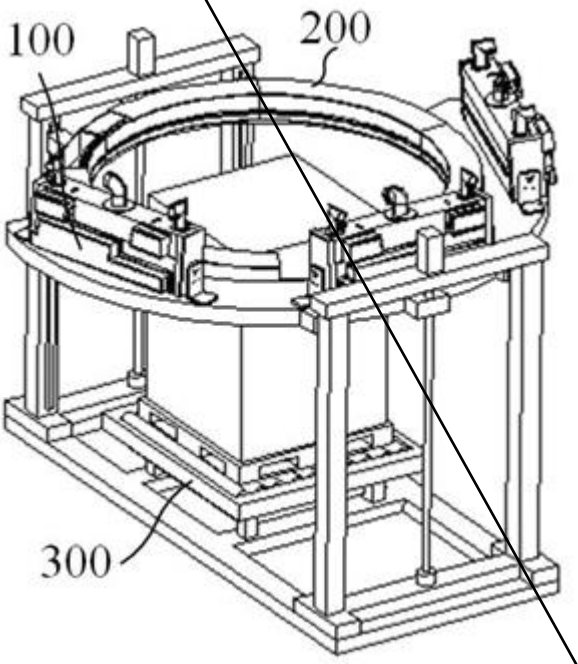

FIG. 12A

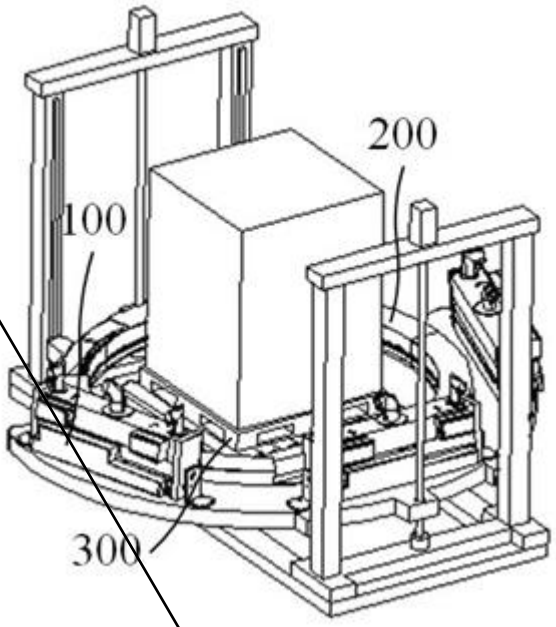

FIG. 12B

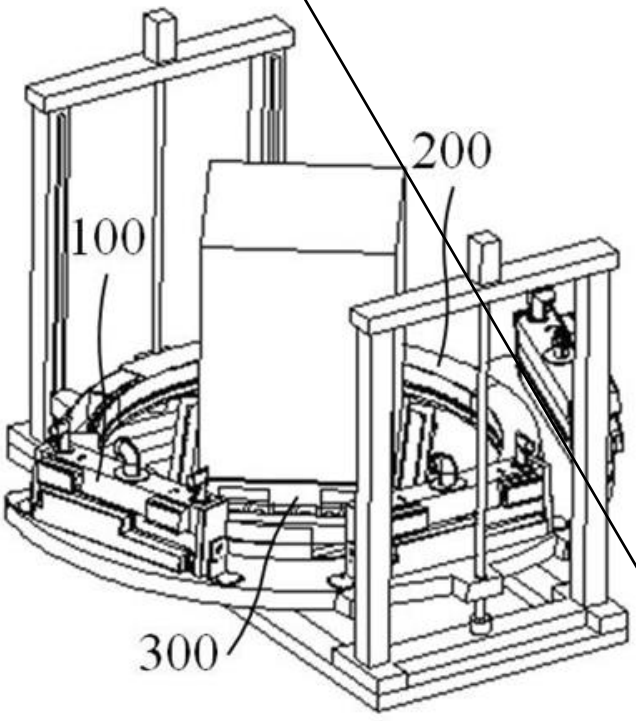

FIG. 12C

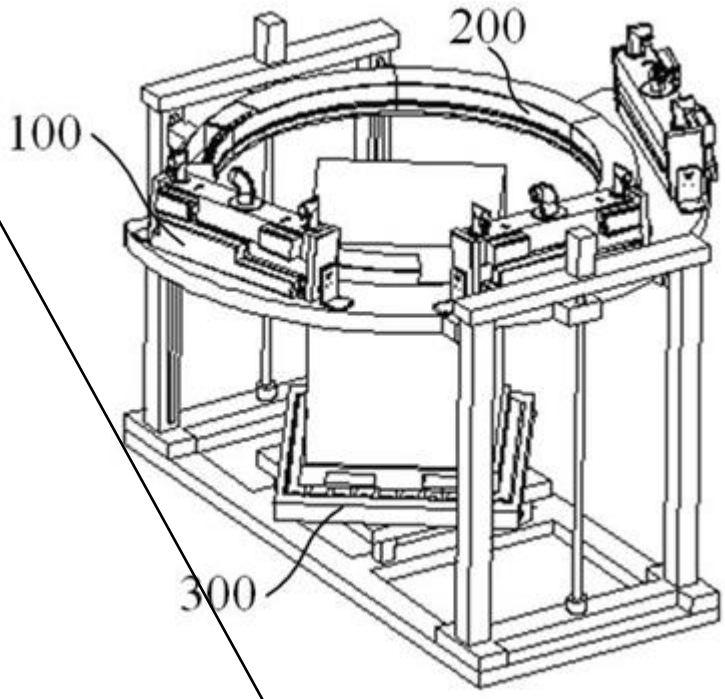

FIG. 12D

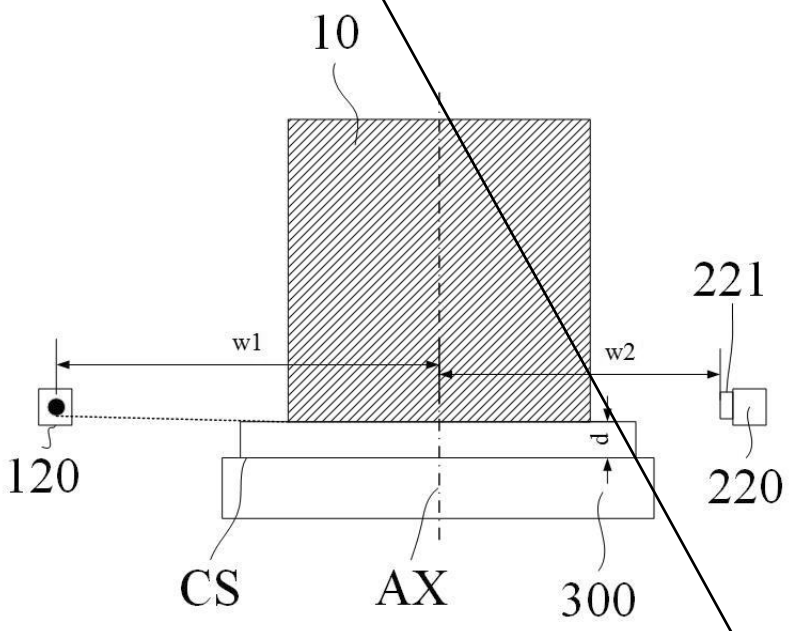

FIG. 13

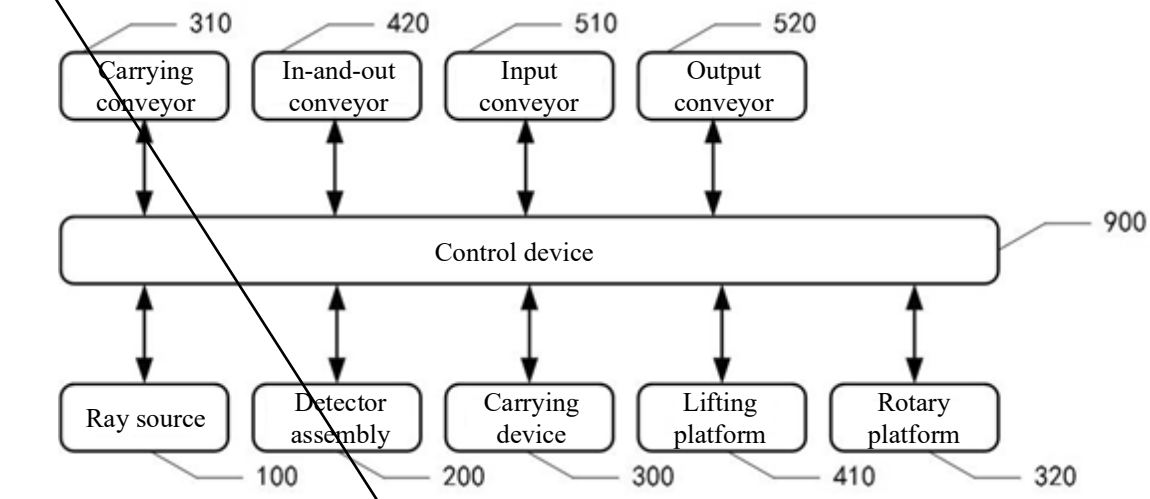
310
420
510
520
Carrying conveyor
In-and-out conveyor
Input conveyor
Output conveyor
900
Control device
Ray source
Detector assembly
Carrying device
Lifting platform
Rotary platform
100
200
300
410
320

FIG. 14

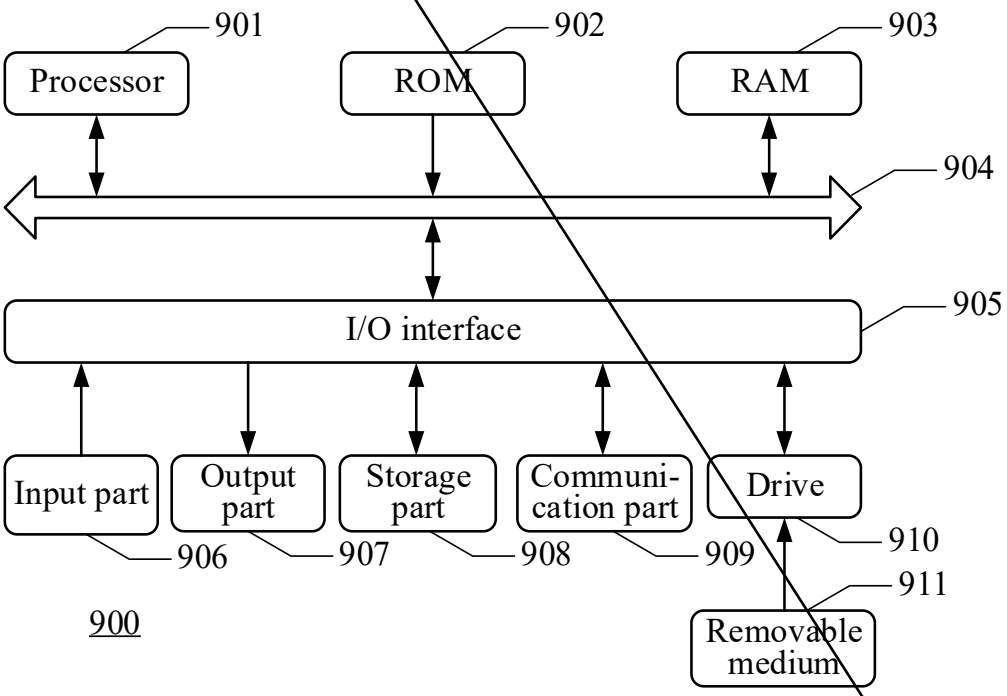
901
902
903
Processor
ROM
RAM
904
905
I/O interface
Input part
Output part
Storage part
Communi-cation part
Drive
906
907
908
909
910
911
900
Removable medium

FIG. 15

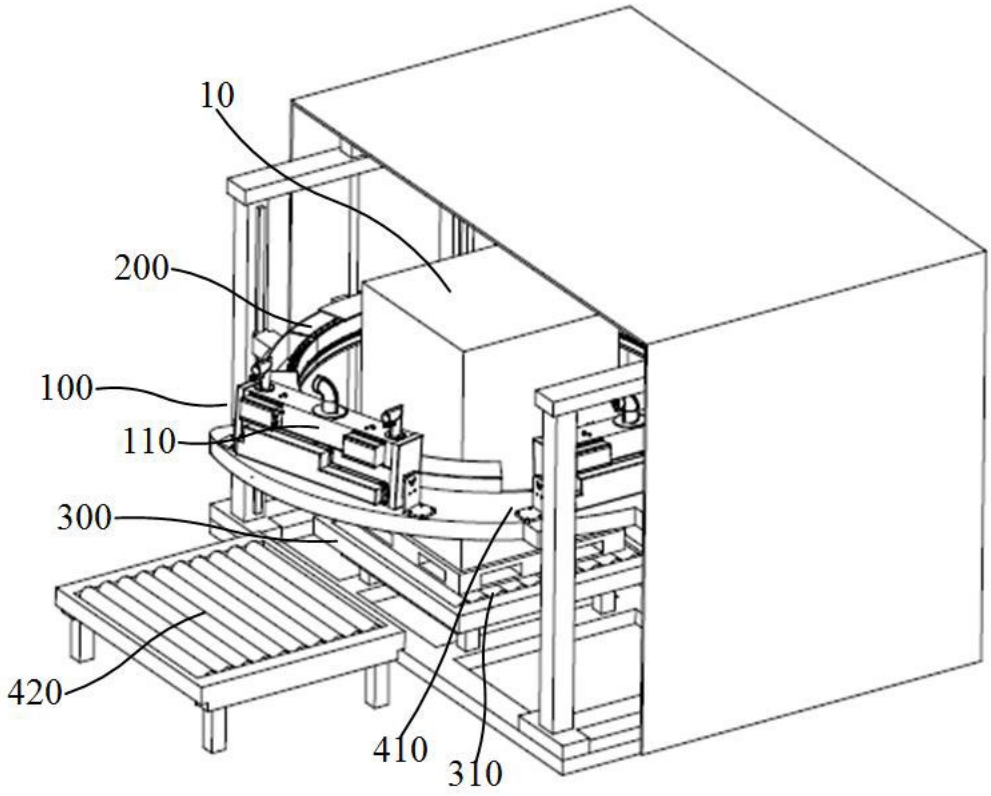

FIG. 1

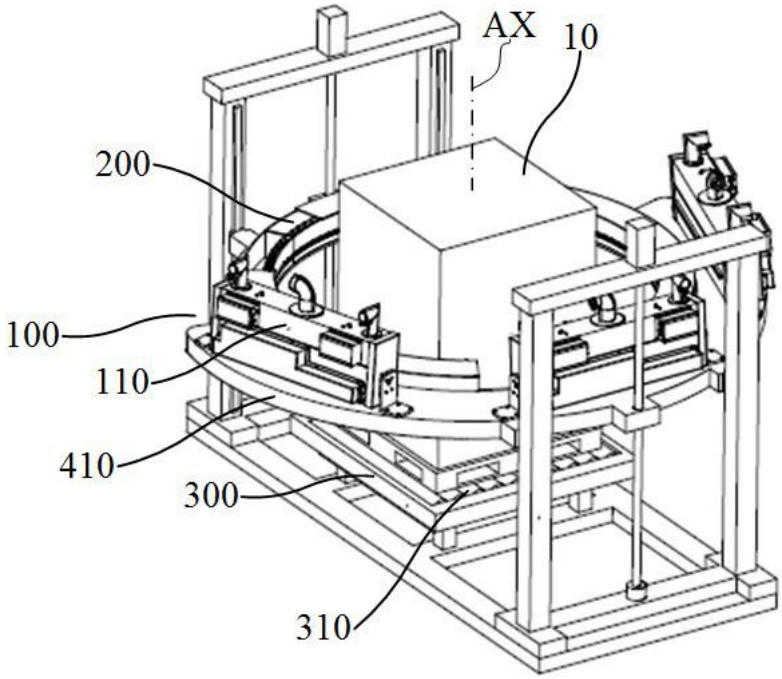

FIG. 2

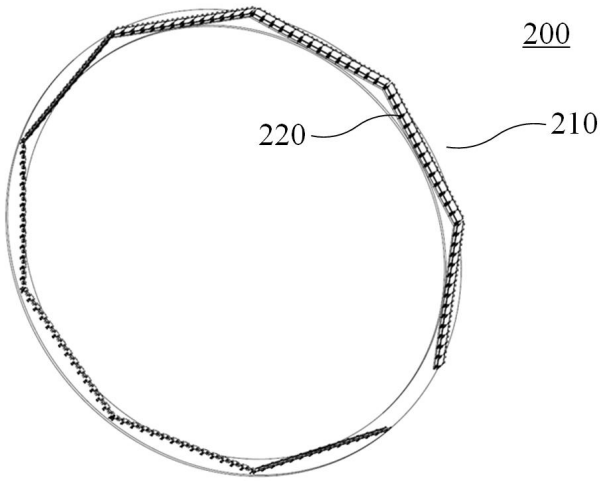

FIG. 3

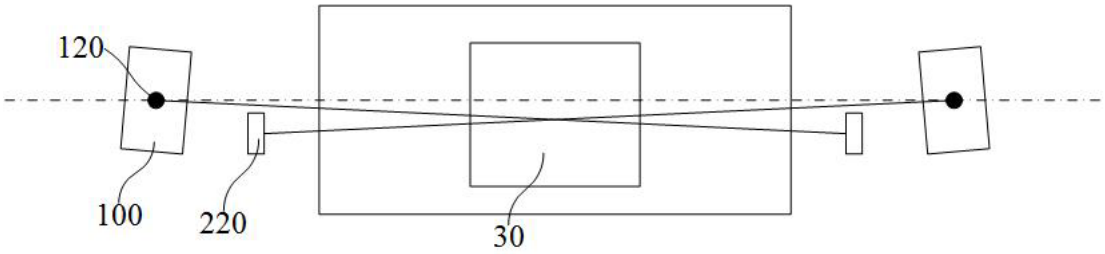

FIG. 4

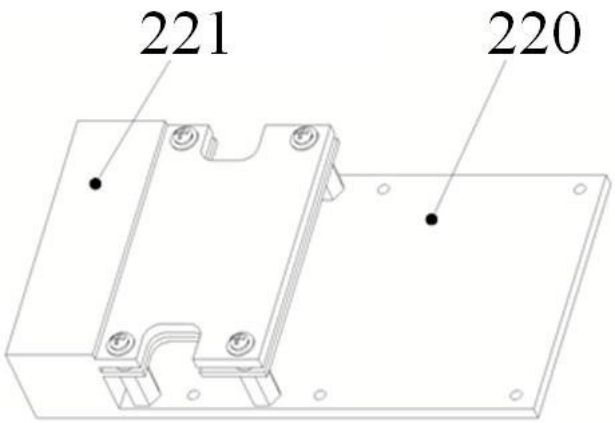

FIG. 5

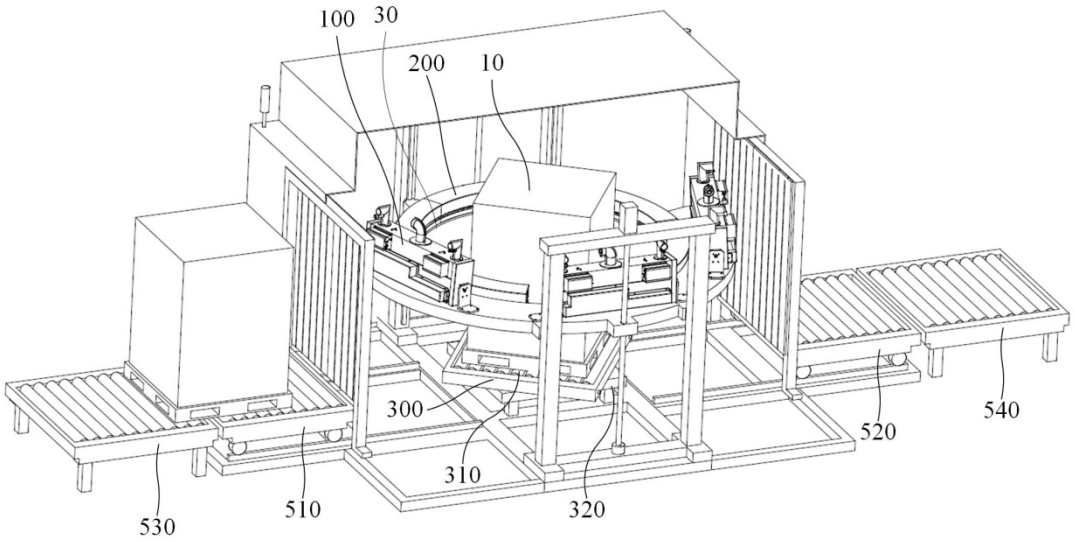

FIG. 6

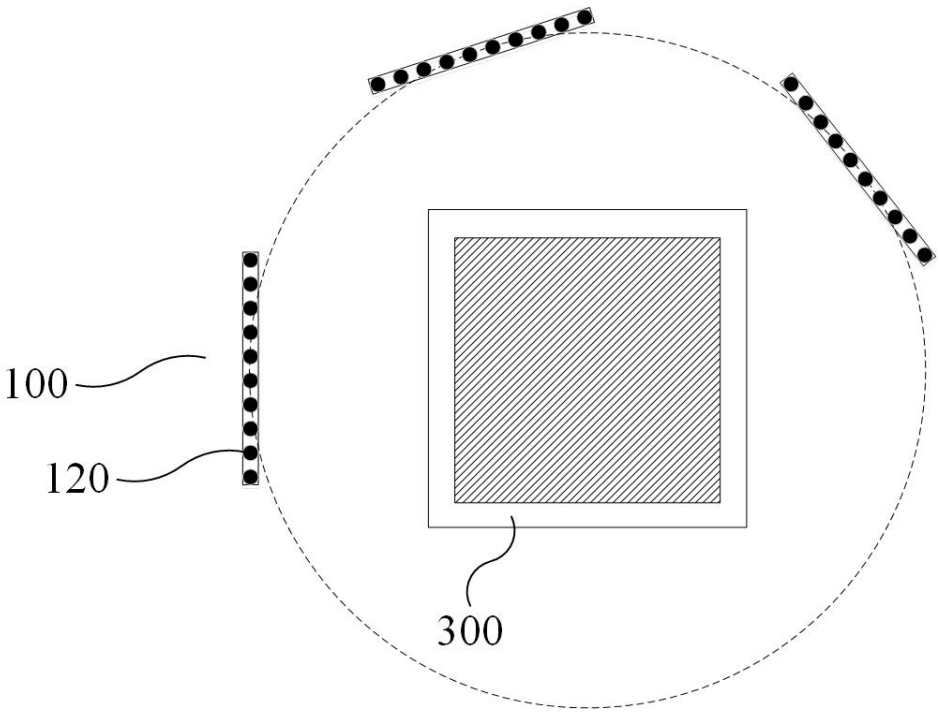

FIG. 7A

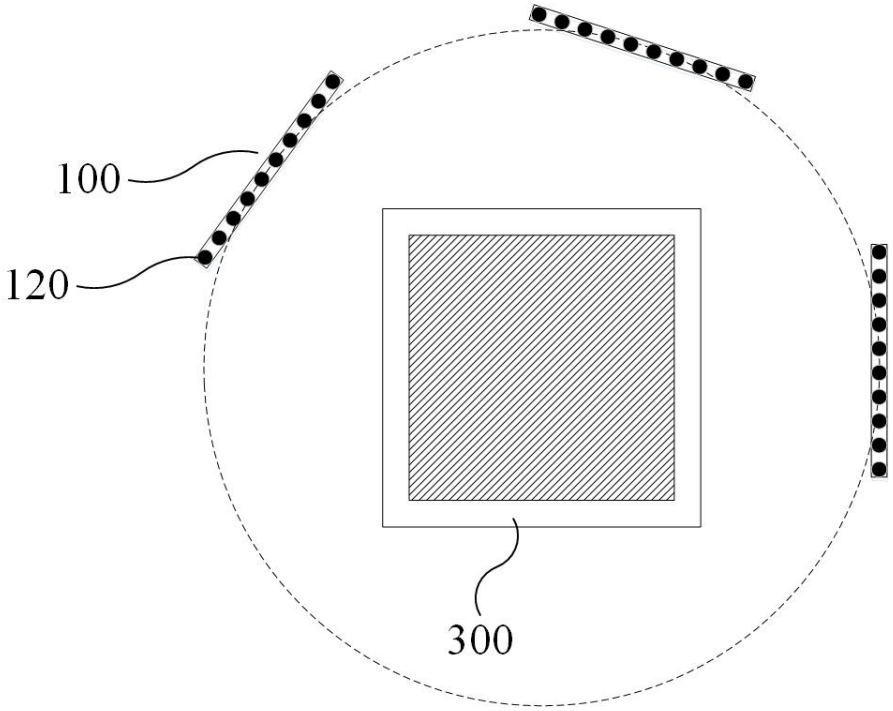

FIG. 7B

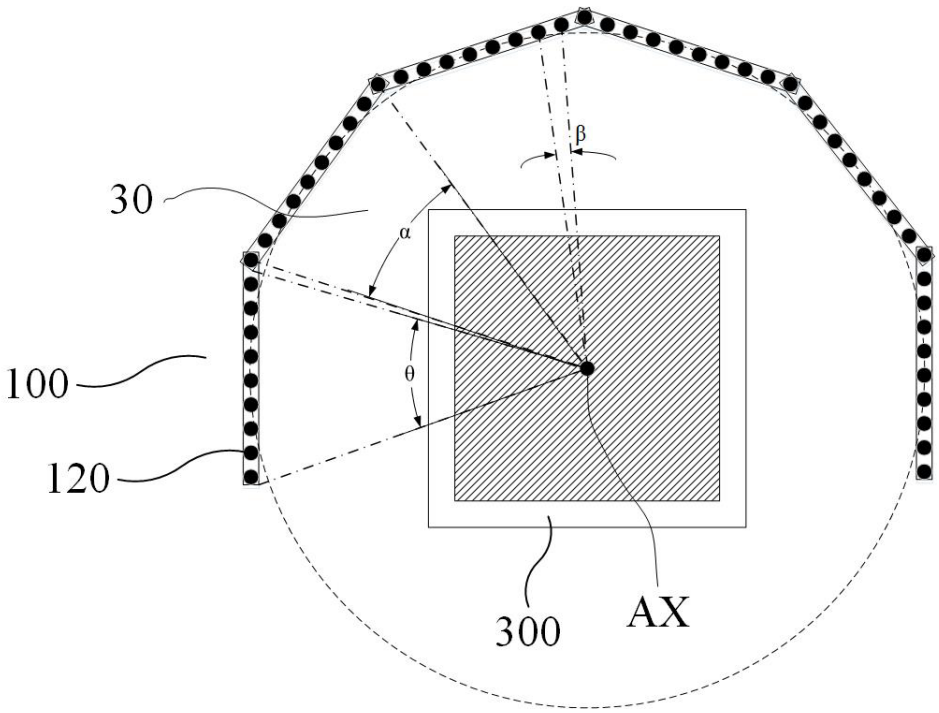

FIG. 7C

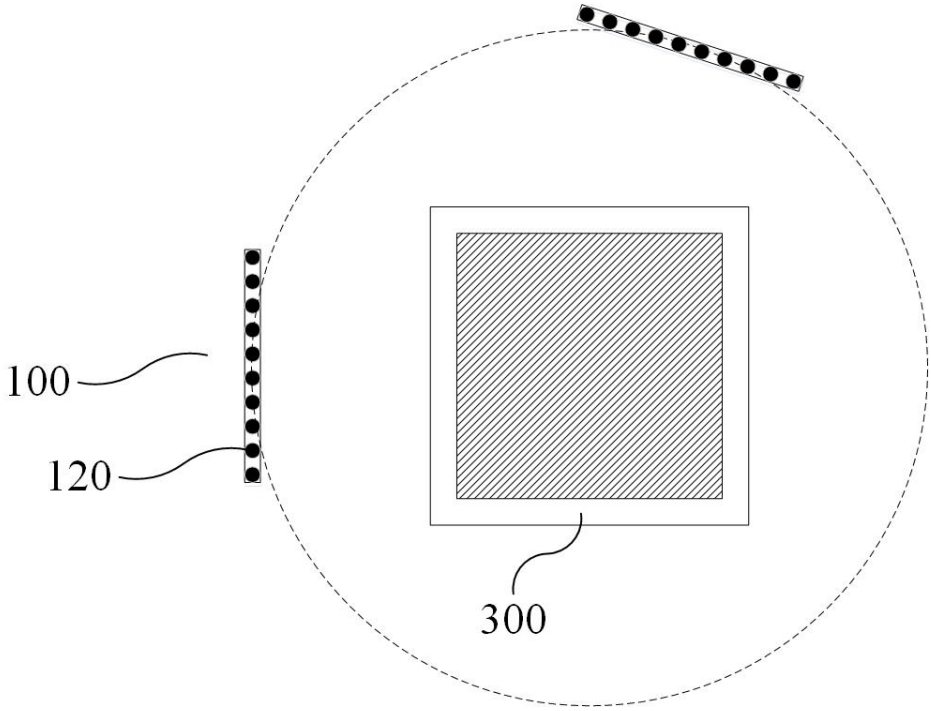

FIG. 8A

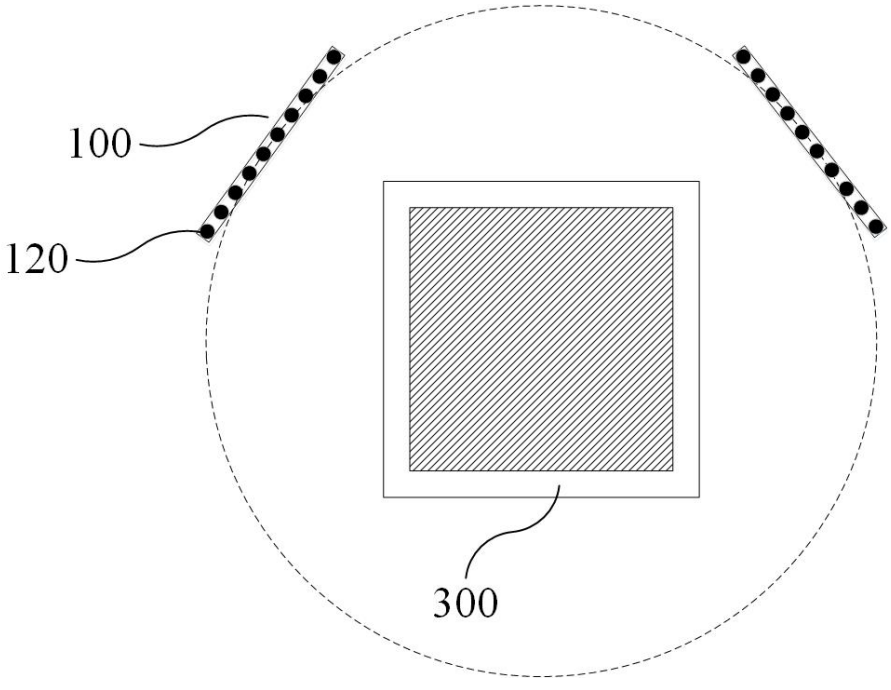

FIG. 8B

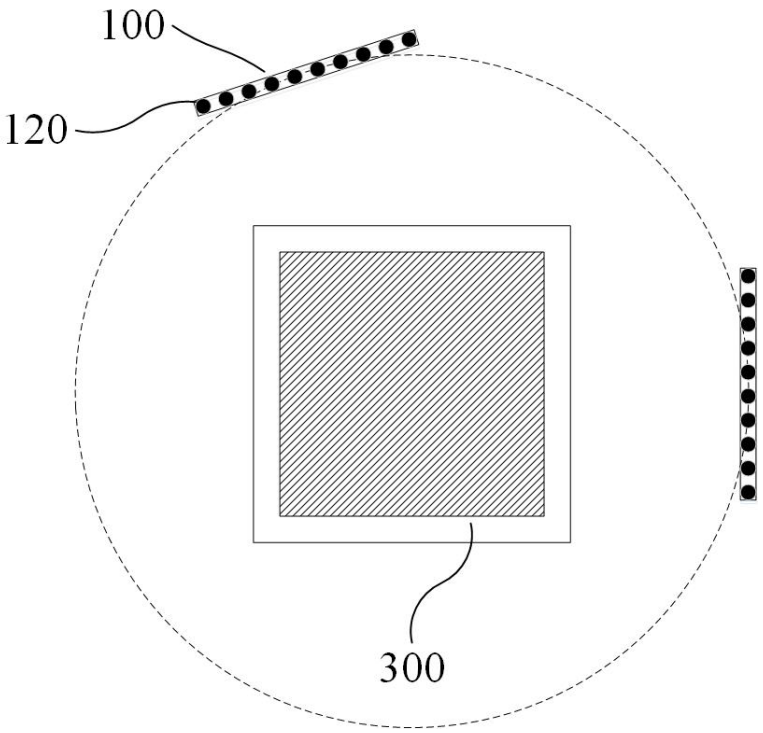

FIG. 8C

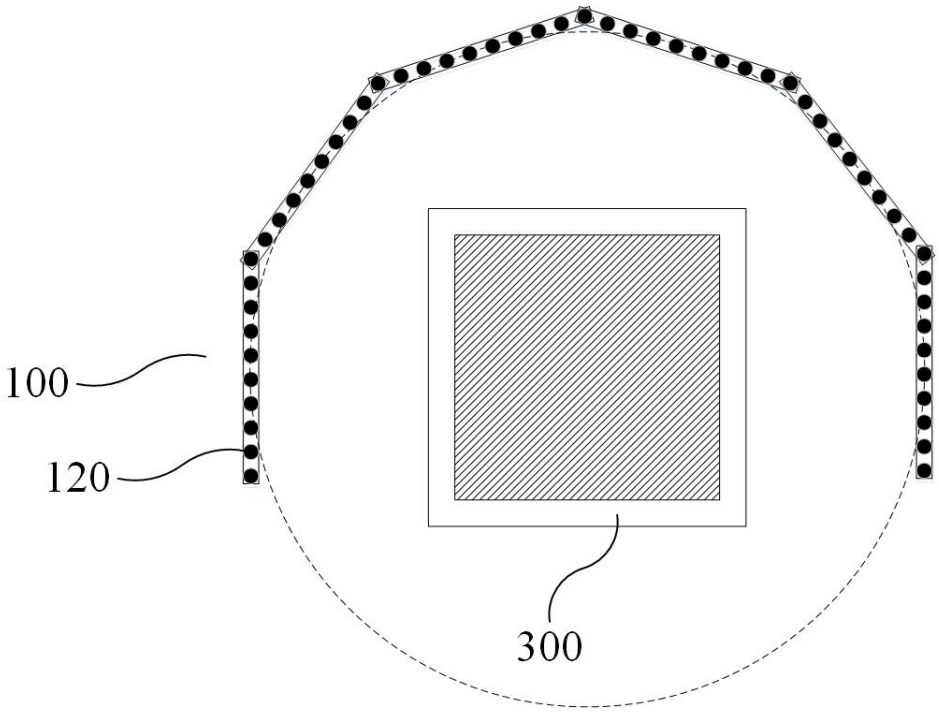

FIG. 8D

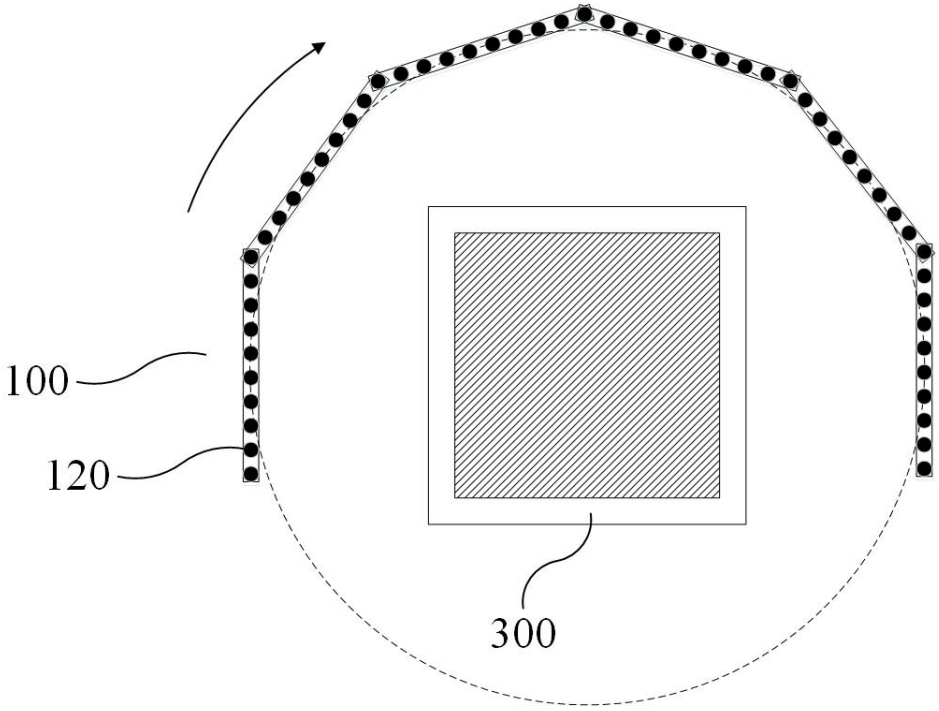

FIG. 9

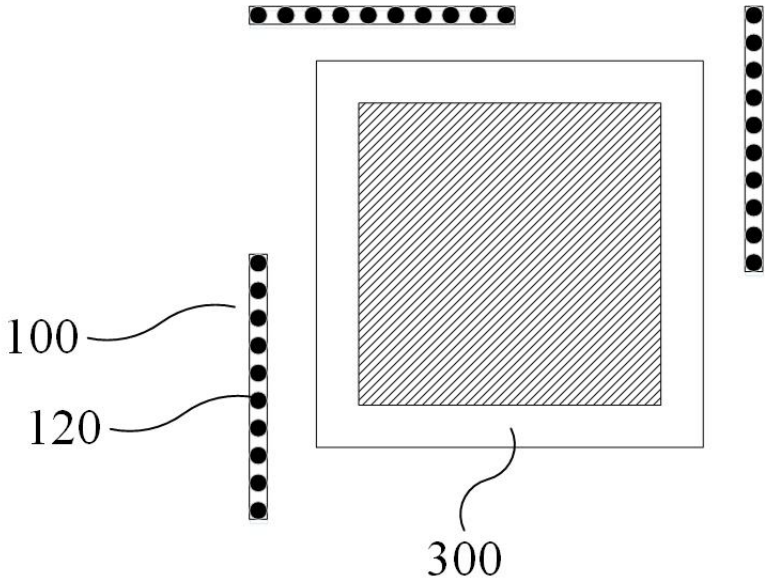

FIG. 10A

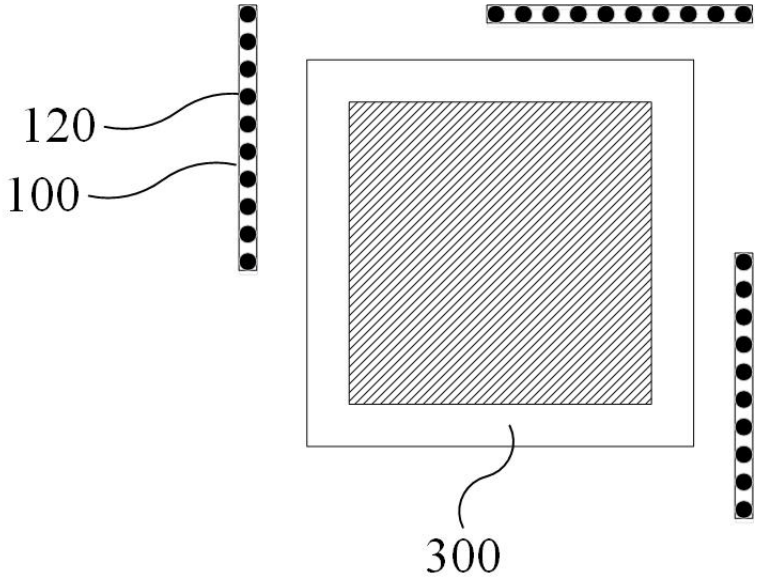

FIG. 10B

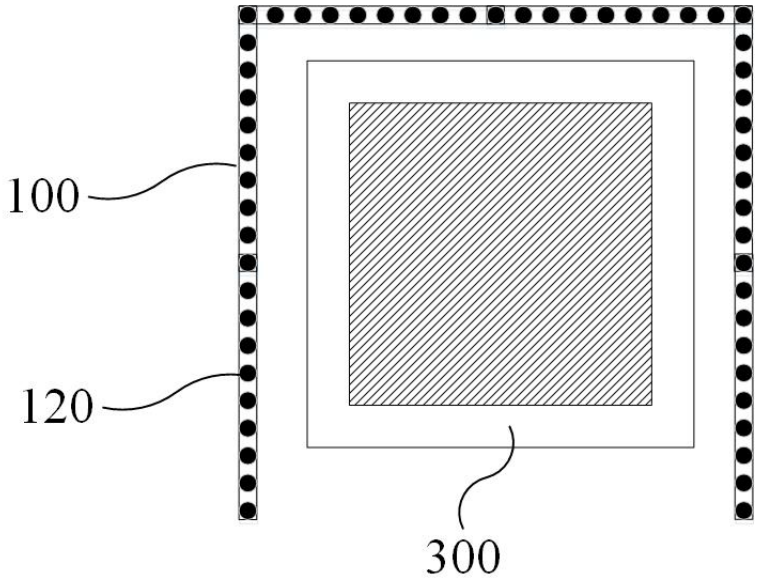

FIG. 10C

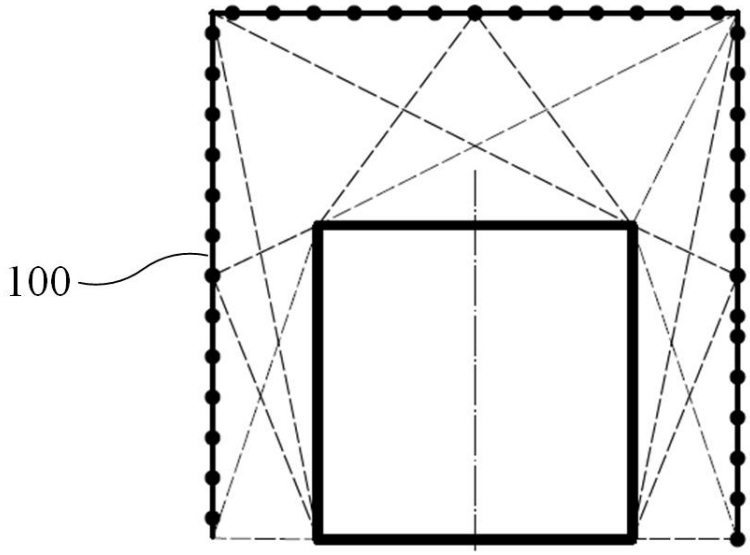

FIG. 11A

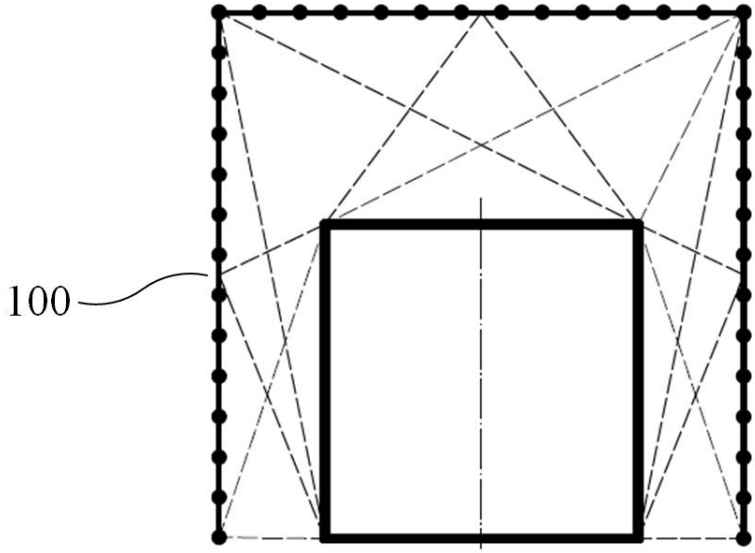

FIG. 11B

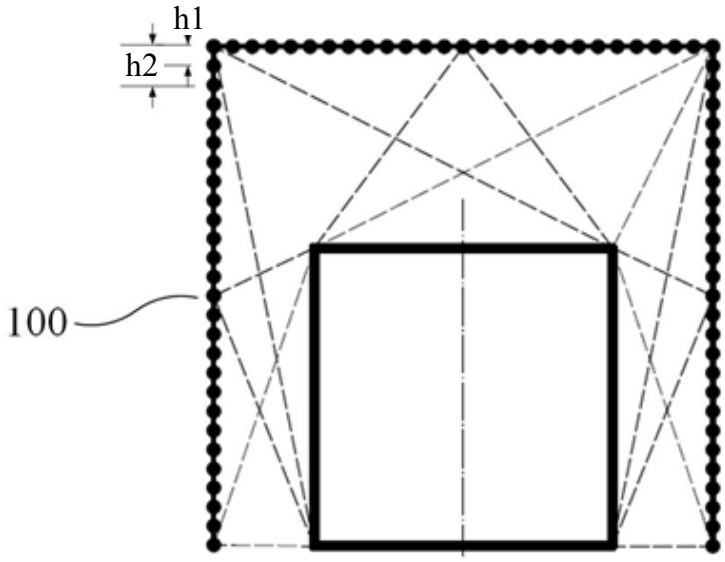

FIG. 11C

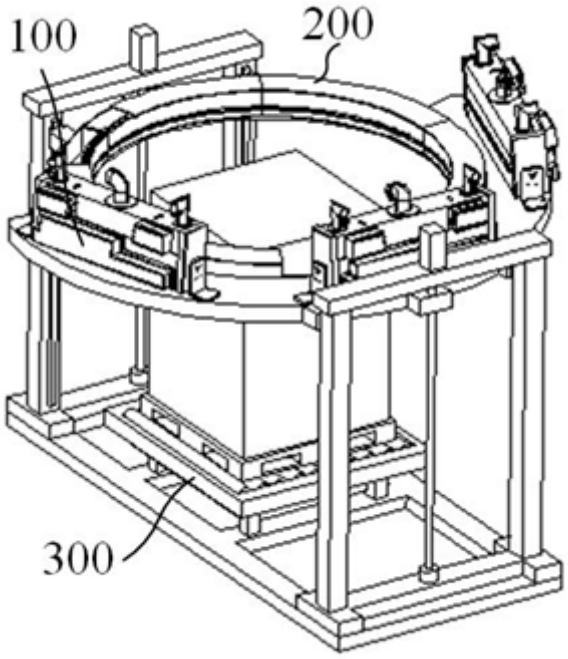

FIG. 12A

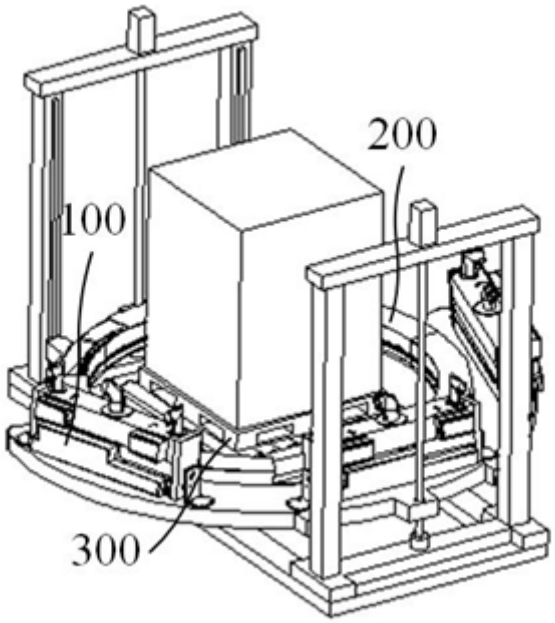

FIG. 12B

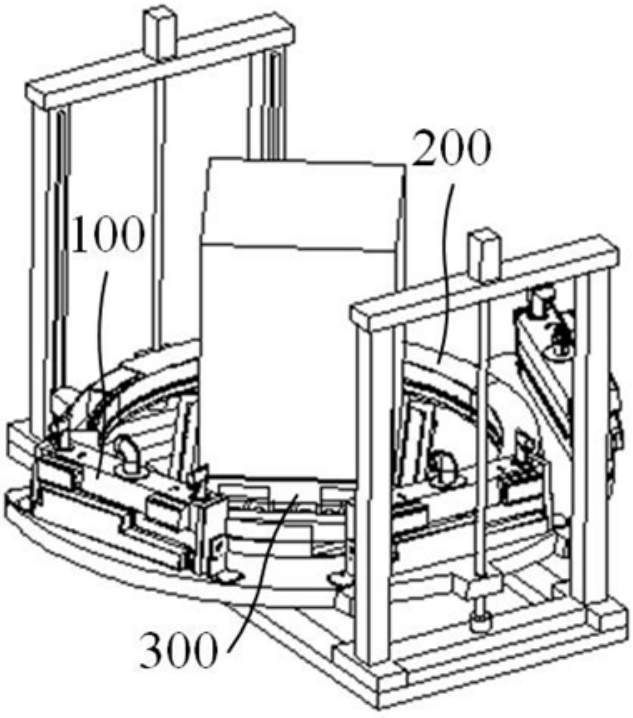

FIG. 12C

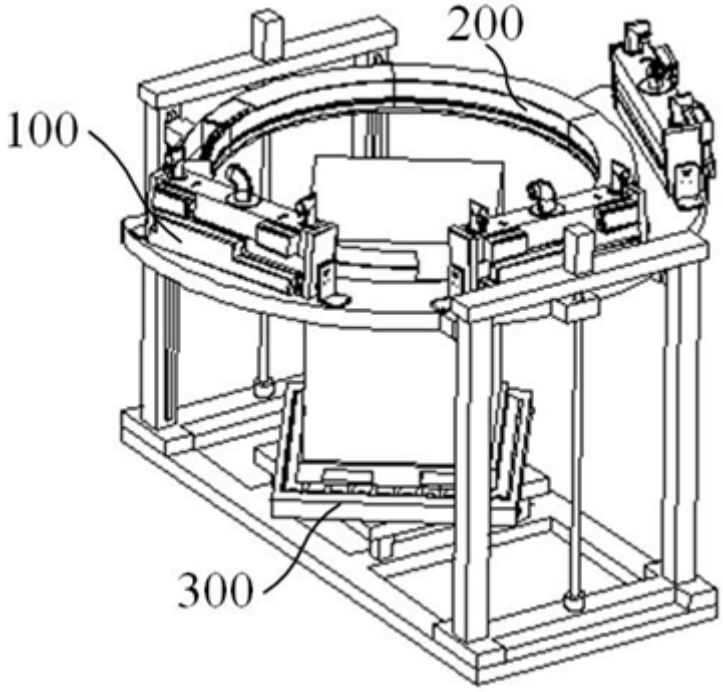

FIG. 12D

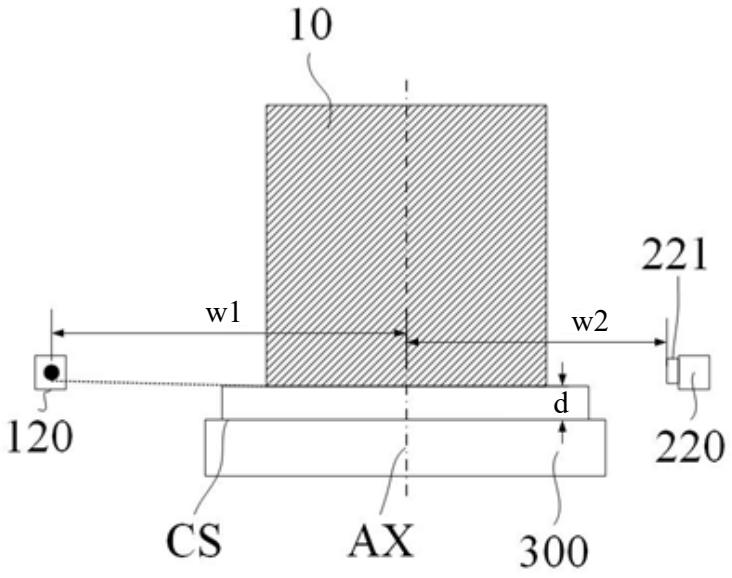

FIG. 13

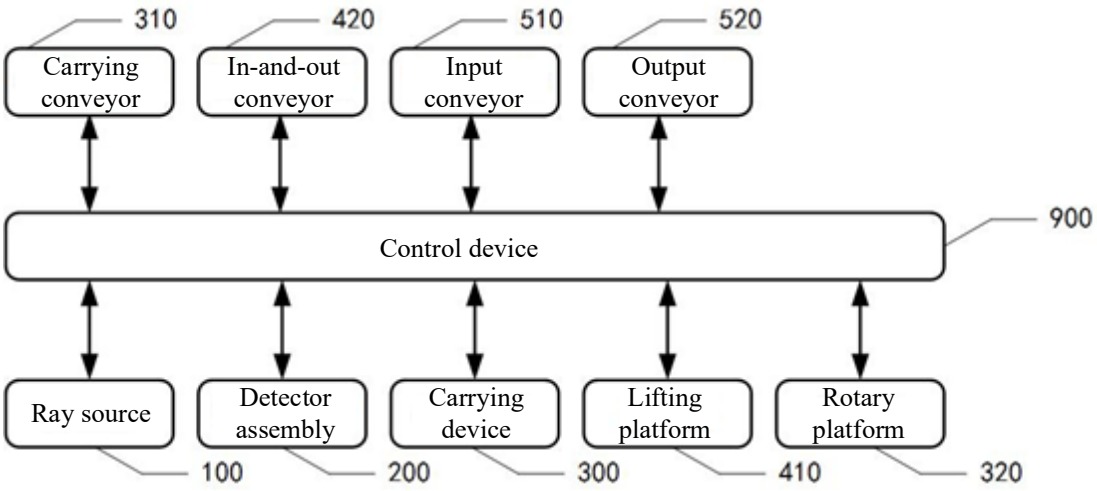
310
420
510
520
Carrying conveyor
In-and-out conveyor
Input conveyor
Output conveyor
900
Control device
Ray source
Detector assembly
Carrying device
Lifting platform
Rotary platform
100
200
300
410
320

FIG. 14

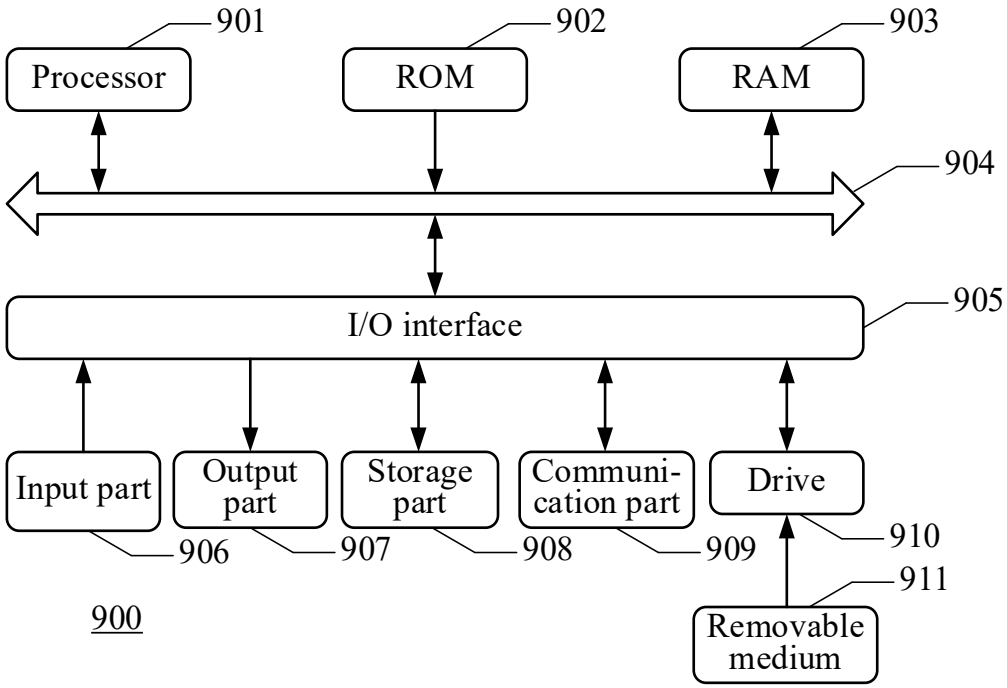
901
902
903
Processor
ROM
RAM
904
905
I/O interface
Input part
Output part
Storage part
Communi-cation part
Drive
906
907
908
909
910
911
900
Removable medium

FIG. 15