(12) INTERNATIONAL APPLICATION PUBLISHED UNDER THE PATENT COOPERATION TREATY (PCT)

(19) World Intellectual Property Organization
International Bureau

(43) International Publication Date
27 September 2012 (27.09.2012)

WIPO | PCT

(10) International Publication Number
WO 2012/128717 A1

(51) International Patent Classification:
B01L 3/00 (2006.01)

(21) International Application Number:
PCT/SG2012/000084

(22) International Filing Date:
13 March 2012 (13.03.2012)

(25) Filing Language: English

(26) Publication Language: English

(30) Priority Data:
201101977-5 18 March 2011 (18.03.2011) SG

(71) Applicant *(for all designated States except US)*: **NATIONAL UNIVERSITY OF SINGAPORE** [SG/SG]; 21 Lower Kent Ridge Road, Singapore 119077 (SG).

(72) Inventors; and

(75) Inventors/Applicants *(for US only)*: **LIM, Chwee Teck** [SG/SG]; 38 College Ave East, #02-253, Singapore 138601 (SG). **TAN, Swee Jin** [SG/SG]; Blk 410C Fernvale Road, #21-86, Singapore 793410 (SG). **BHAGAT Ali Asgar S.** [IN/SG]; 67 Hume Avenue, #08-02, Singapore 598744 (SG).

(74) Agent: **PEACOCK, Blayne, Malcolm**; Marks & Clerk Singapore LLP, Tanjong Pagar, P.O. Box 636, Singapore 910816 (SG).

(81) Designated States *(unless otherwise indicated, for every kind of national protection available)*: AE, AG, AL, AM, AO, AT, AU, AZ, BA, BB, BG, BH, BR, BW, BY, BZ, CA, CH, CL, CN, CO, CR, CU, CZ, DE, DK, DM, DO, DZ, EC, EE, EG, ES, FI, GB, GD, GE, GH, GM, GT, HN, HR, HU, ID, IL, IN, IS, JP, KE, KG, KM, KN, KP, KR, KZ, LA, LC, LK, LR, LS, LT, LU, LY, MA, MD, ME, MG, MK, MN, MW, MX, MY, MZ, NA, NG, NI, NO, NZ, OM, PE, PG, PH, PL, PT, QA, RO, RS, RU, RW, SC, SD, SE, SG, SK, SL, SM, ST, SV, SY, TH, TJ, TM, TN, TR, TT, TZ, UA, UG, US, UZ, VC, VN, ZA, ZM, ZW.

(84) Designated States *(unless otherwise indicated, for every kind of regional protection available)*: ARIPO (BW, GH, GM, KE, LR, LS, MW, MZ, NA, RW, SD, SL, SZ, TZ, UG, ZM, ZW), Eurasian (AM, AZ, BY, KG, KZ, MD, RU,

[Continued on next page]

(54) Title: ISOLATING TARGET CELLS FROM A BIOLOGICAL FLUID

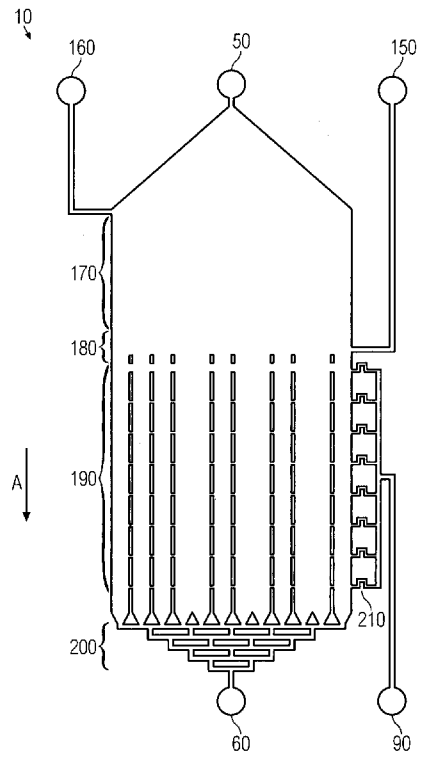

FIG. 3

(57) Abstract: A micro-fluidic device (10) operable to isolate target cells from a biological fluid and a method of isolating target cells from a biological fluid are disclosed. The micro-fluidic device (10) comprises: an inlet (50) operable to receive the biological fluid, the biological fluid comprising target cells and other components; an waste outlet (60) operable to receive at least the other components of the biological fluid; a plurality of parallel arrays of cell isolation wells (190) coupling the inlet (50) with the waste outlet (60), each parallel array of cell isolation wells (190) supporting a flow of the biological fluid from the inlet (50) to the waste outlet (60) in response to a pressure differential thereacross, each array of cell isolation wells (190) comprising a plurality isolation wells, each isolation well being dimensioned to mechanically trap the target cells therein whilst permitting flow of other components of the biological fluid; and at least one pressure maintenance structure operable to assist in maintaining a predetermined pressure differential across each of the plurality of parallel arrays of cell isolation wells (190). An increased volume of fluid can be processed using an increased number of traps in order to increase the number of target cells which are retained. By providing the arrays in parallel, the volume of sample that can be processed per unit time may be increased. This may reduce the processing time of a sample whilst increasing the efficiency of target cell isolation. Also, by using pressure maintenance structures (40), each of the parallel arrays of cell isolation structures may be operated effectively to ensure correct processing of the sample. This helps to ameliorate the problem of increasing the scale of the micro-fluidic device (10) which is difficult because it is difficult to reliably achieve a predictable flow in the presence of samples having wide-varying characteristics.

WO 2012/128717 A1

TJ, TM), European (AL, AT, BE, BG, CH, CY, CZ, DE, DK, EE, ES, FI, FR, GB, GR, HR, HU, IE, IS, IT, LT, LU, LV, MC, MK, MT, NL, NO, PL, PT, RO, RS, SE, SI, SK, SM, TR), OAPI (BF, BJ, CF, CG, CI, CM, GA, GN, GQ, GW, ML, MR, NE, SN, TD, TG).

Declarations under Rule 4.17:

— *of inventorship (Rule 4.17(iv))*

Published:

— *with international search report (Art. 21(3))*