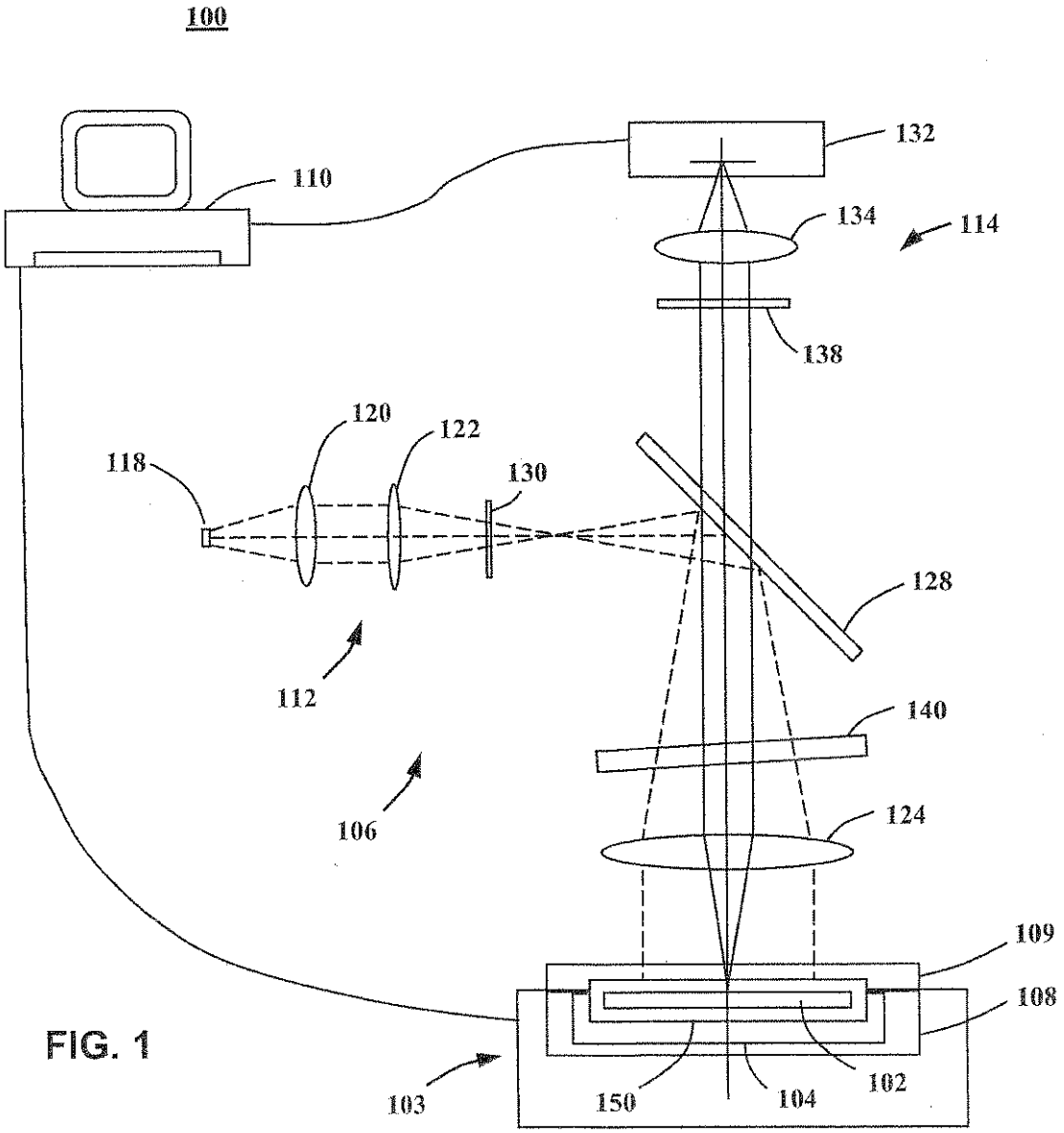
100
110
132
134
114
138
120
122
118
130
128
112
140
106
124
109
108
103
150
104
102

FIG. 1

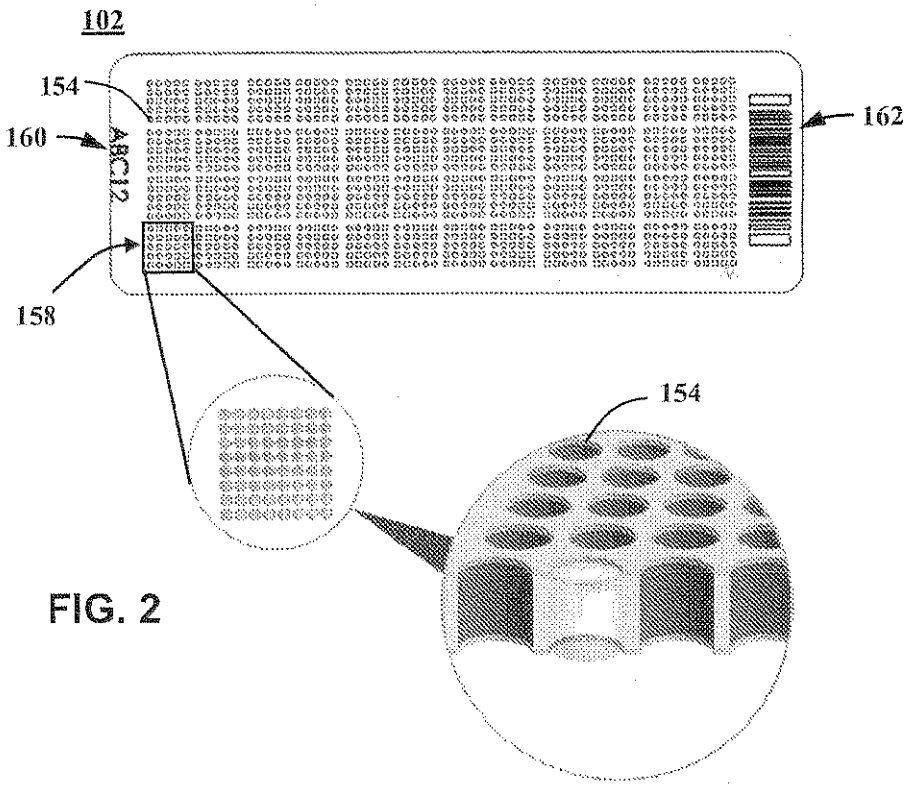

FIG. 2

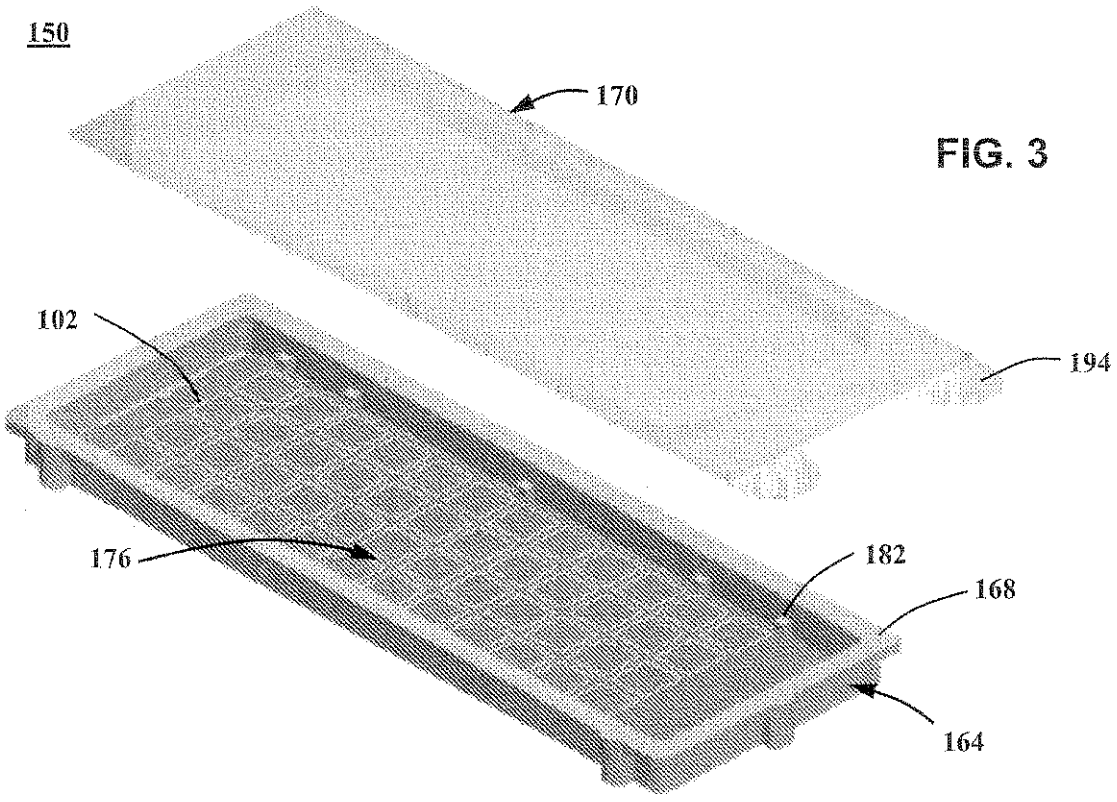

FIG. 3

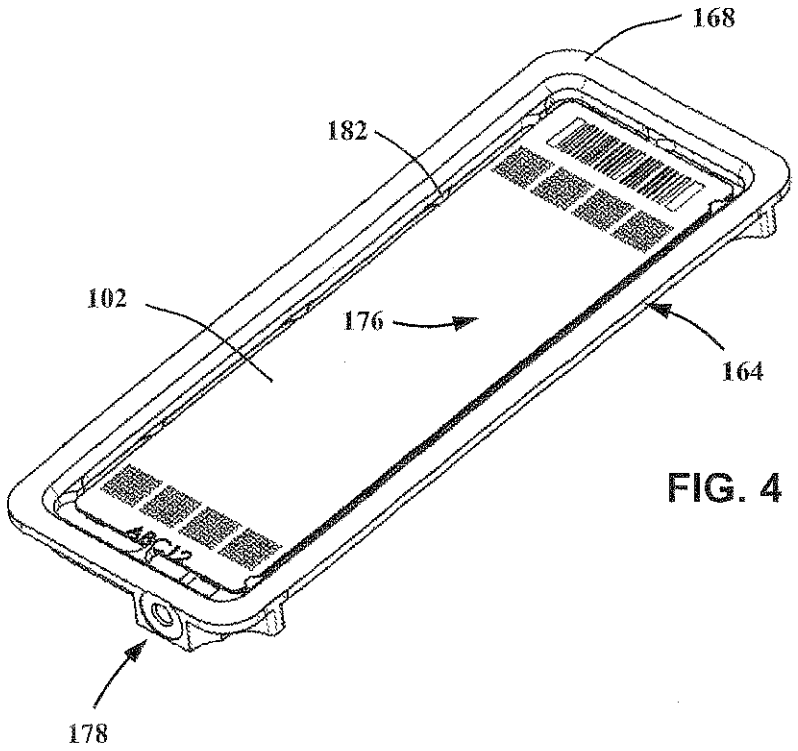

FIG. 4

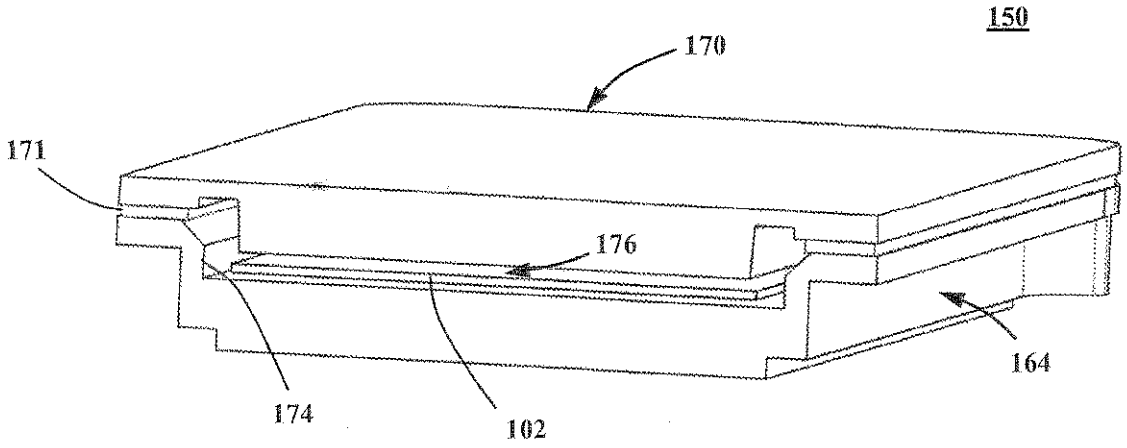

FIG. 5

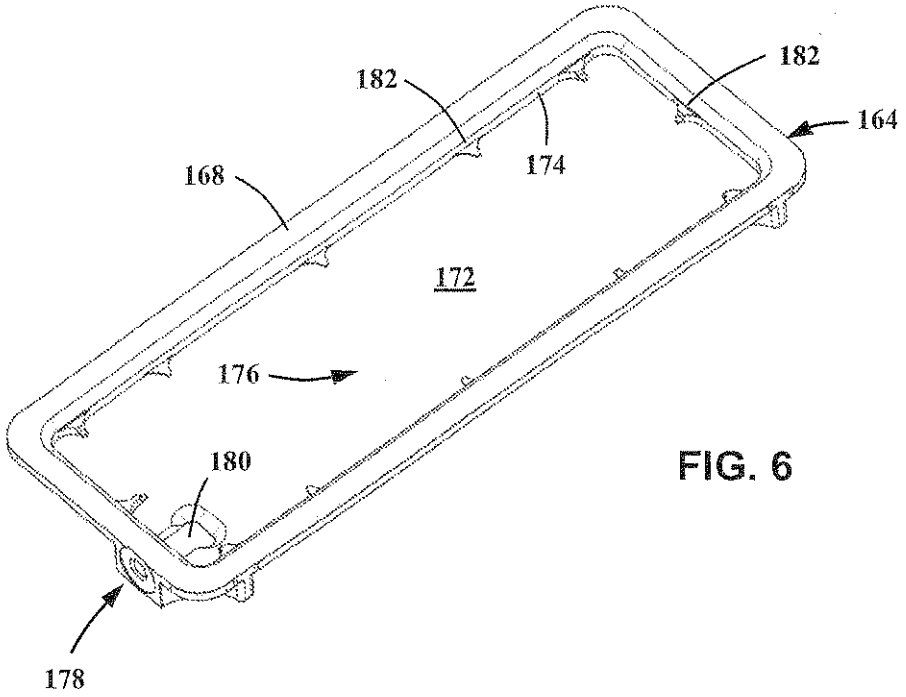

FIG. 6

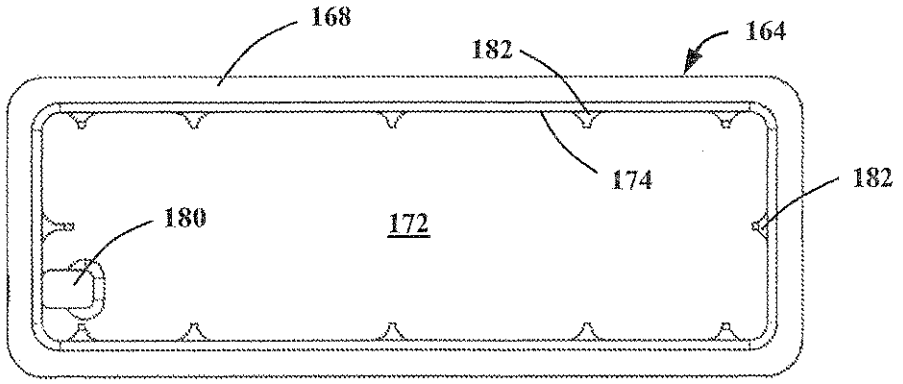

FIG. 7

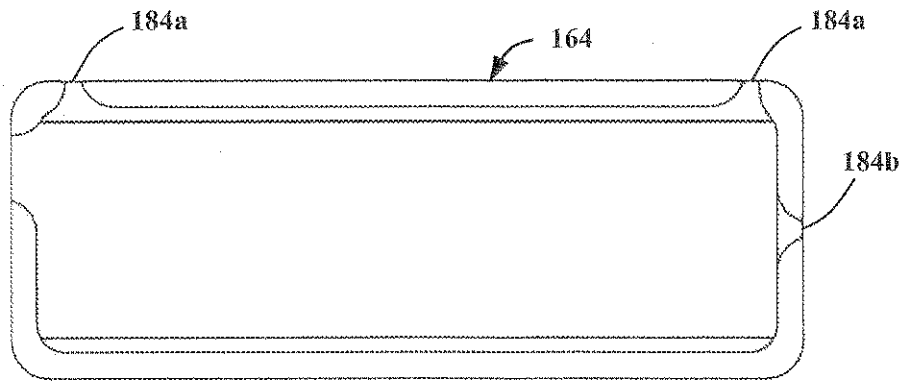

FIG. 8

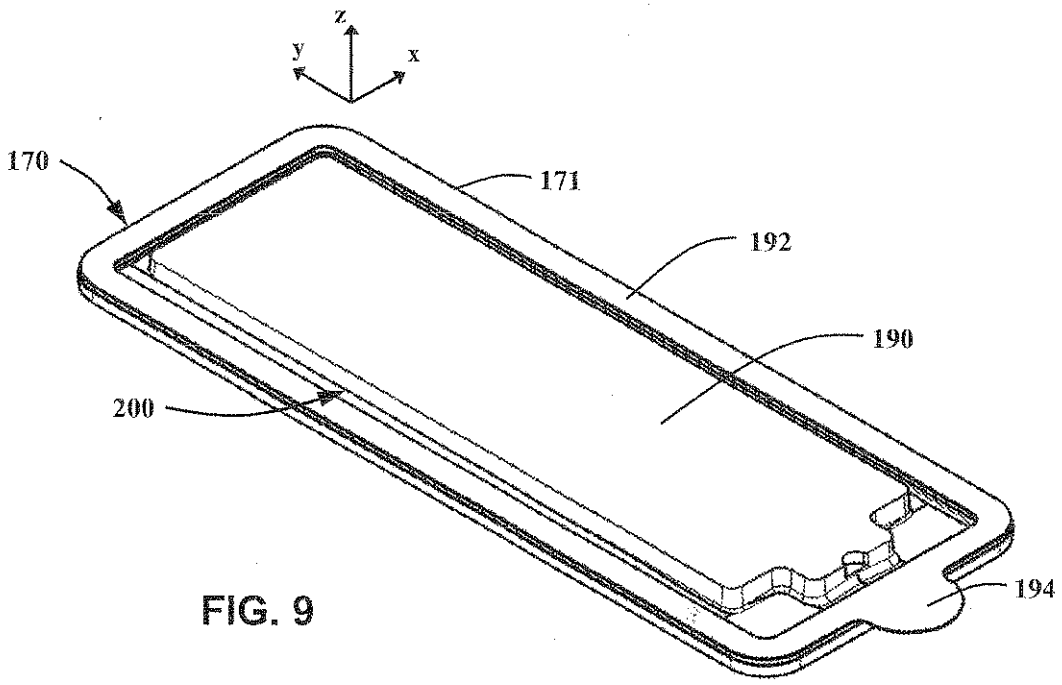

FIG. 9

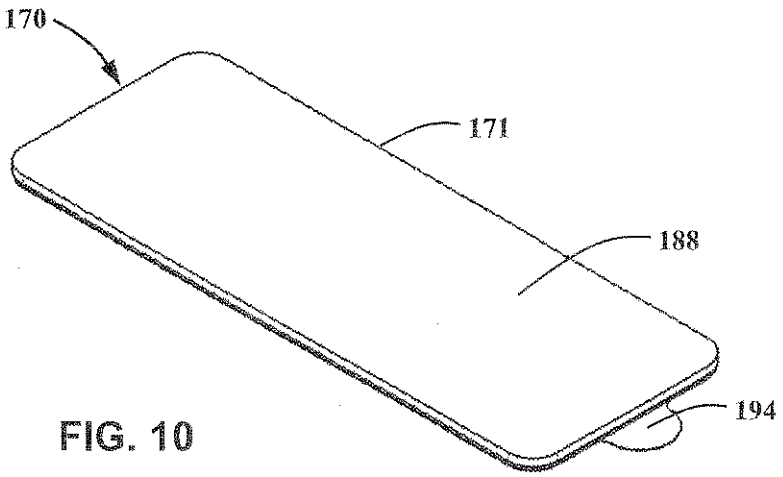

FIG. 10

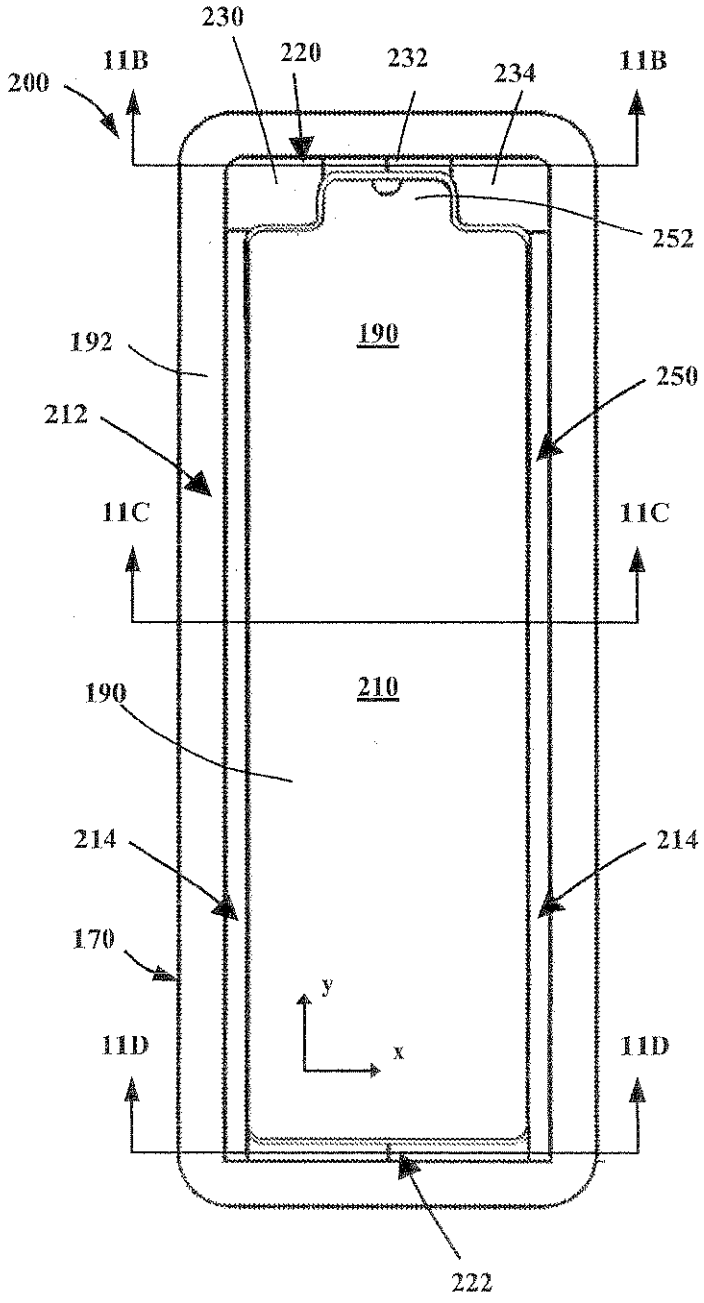

FIG. 11A

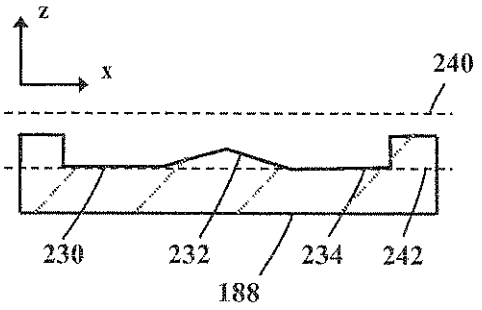

FIG. 11B

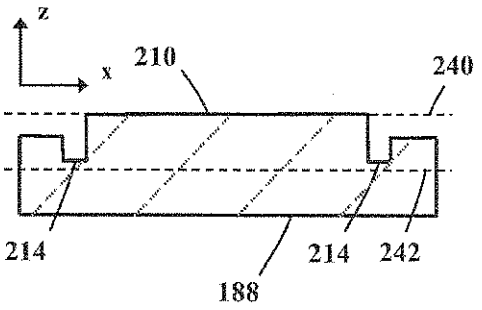

FIG. 11C

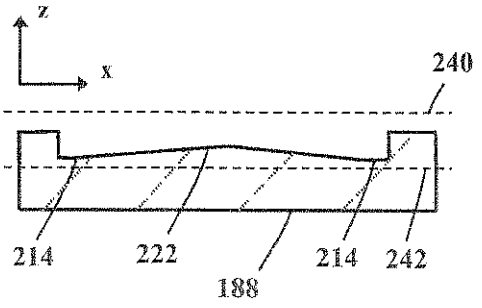

FIG. 11D

FIG. 12A

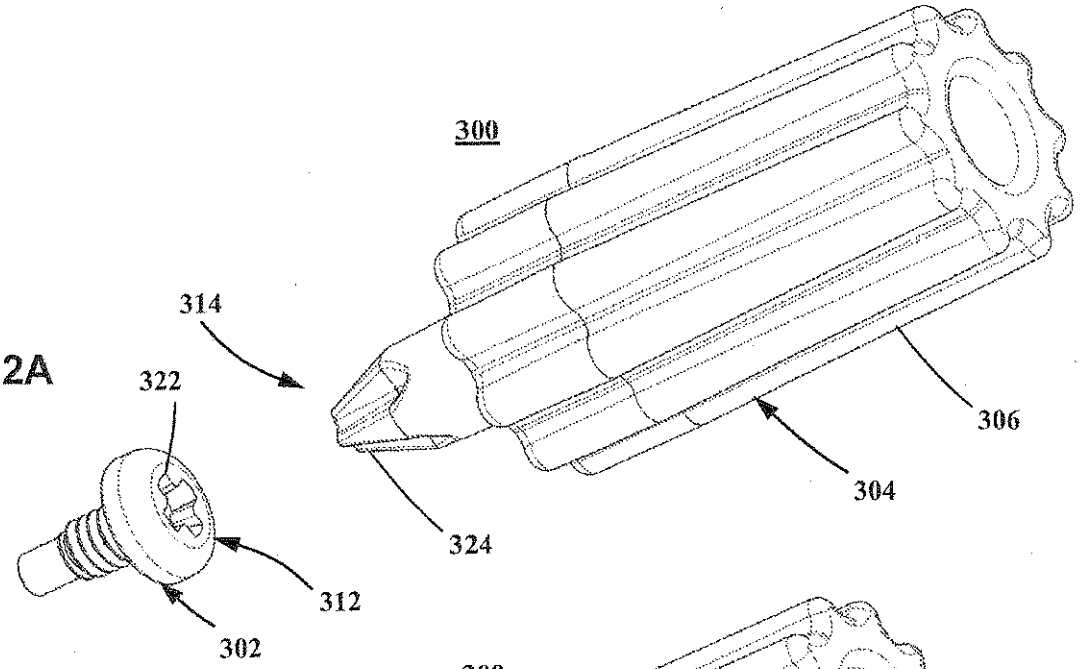

FIG. 12B

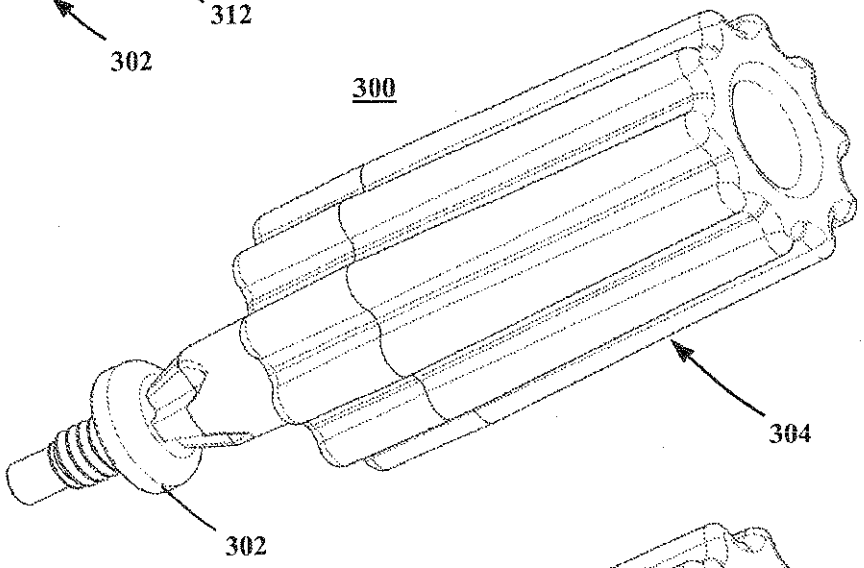

FIG. 12C

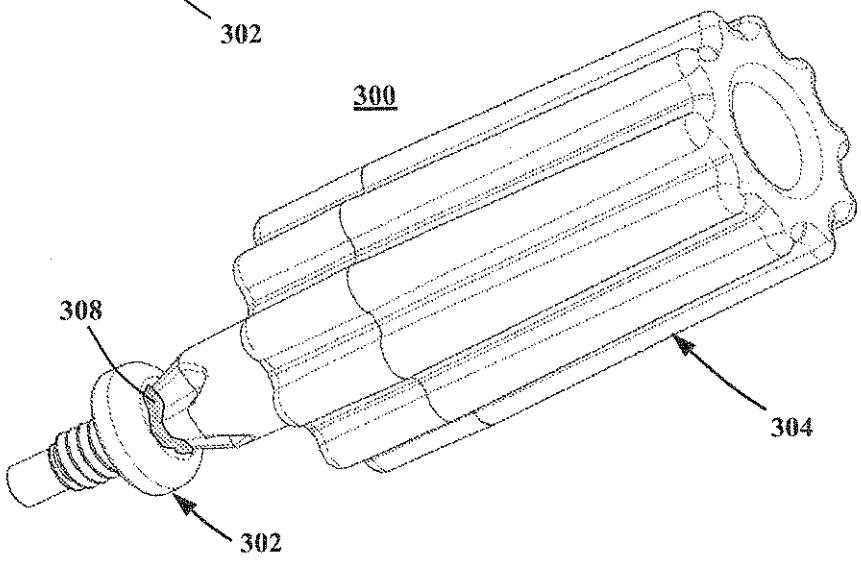

FIG. 13

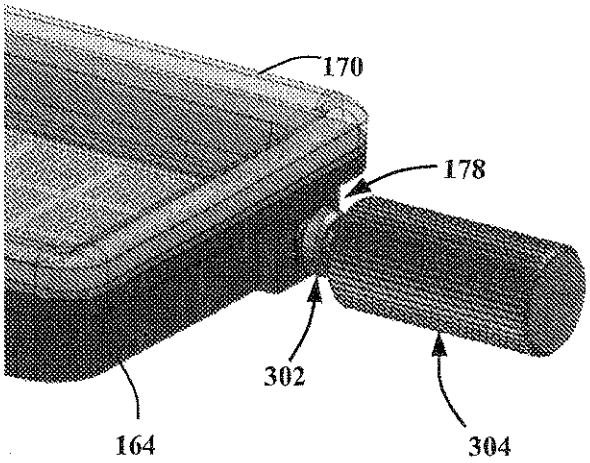

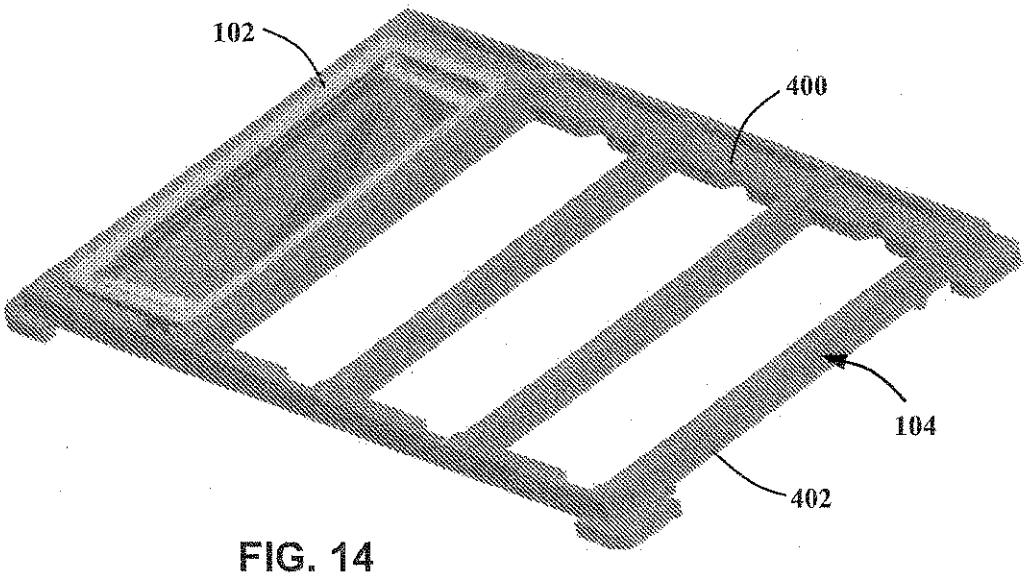

FIG. 14

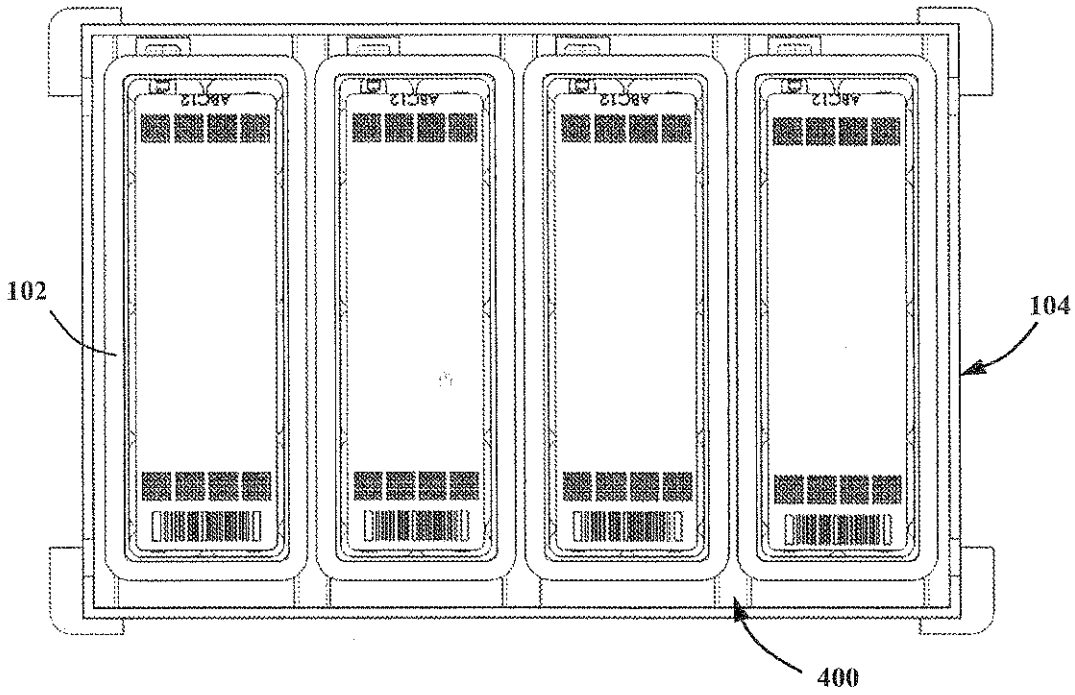

FIG. 15

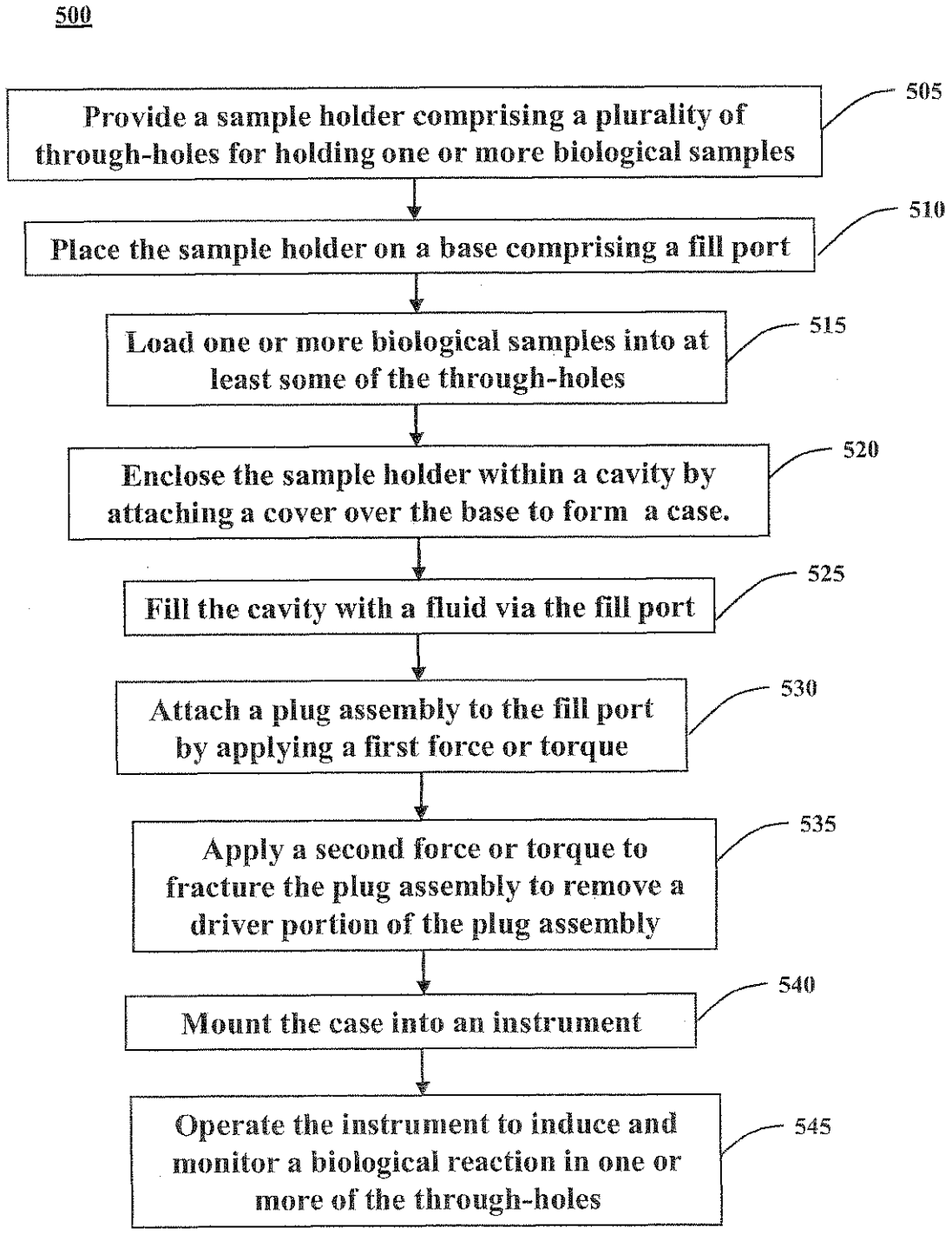
500
Provide a sample holder comprising a plurality of through-holes for holding one or more biological samples
505
Place the sample holder on a base comprising a fill port
510
Load one or more biological samples into at least some of the through-holes
515
Enclose the sample holder within a cavity by attaching a cover over the base to form a case.
520
Fill the cavity with a fluid via the fill port
525
Attach a plug assembly to the fill port by applying a first force or torque
530
Apply a second force or torque to fracture the plug assembly to remove a driver portion of the plug assembly
535
Mount the case into an instrument
540
Operate the instrument to induce and monitor a biological reaction in one or more of the through-holes
545

FIG. 16