【Fig.1】

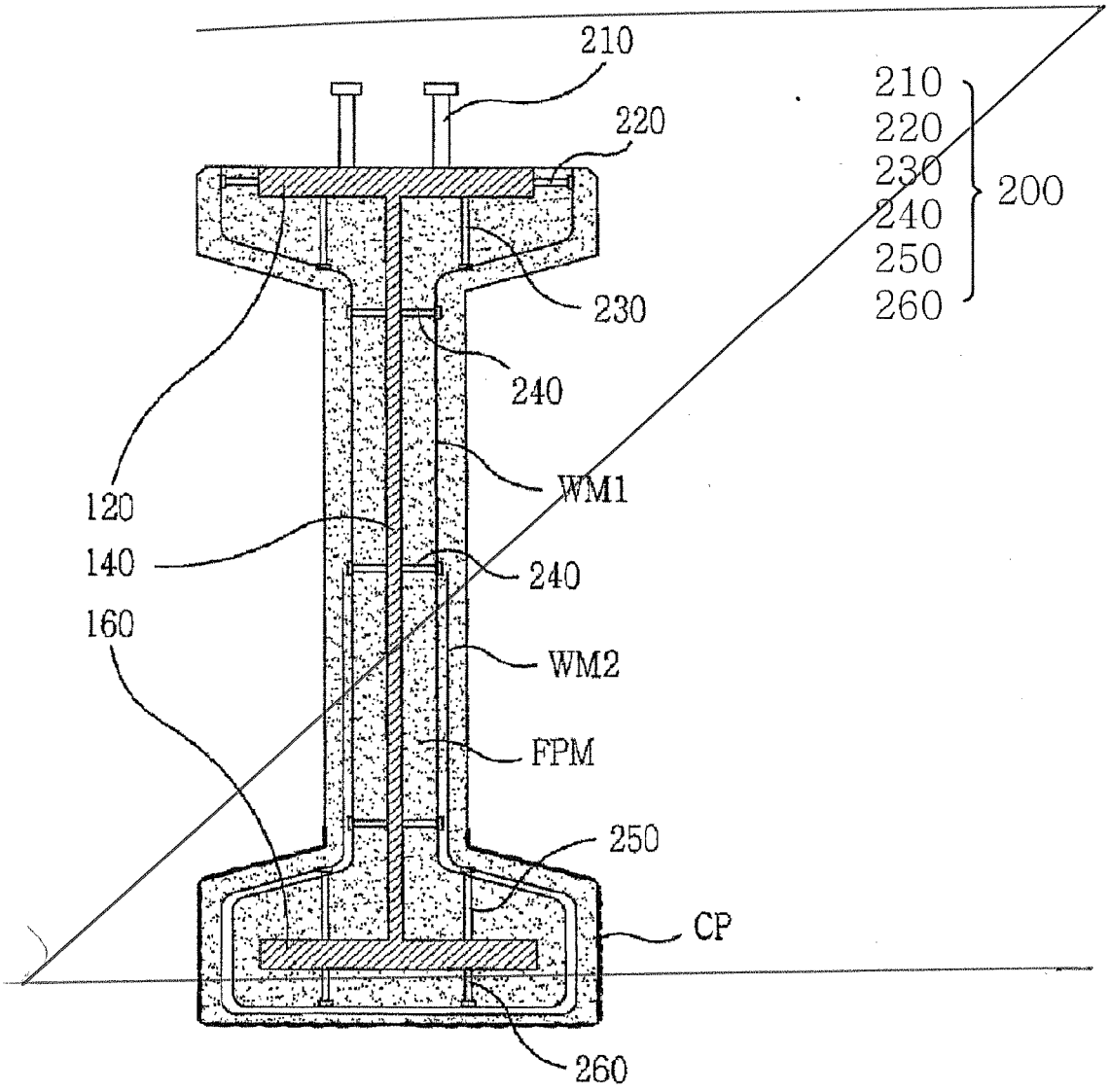
210
220
230
240
250
260
200
210
220
230
240
WM1
120
140
240
160
WM2
FPM
250
CP
260

【Fig.2】

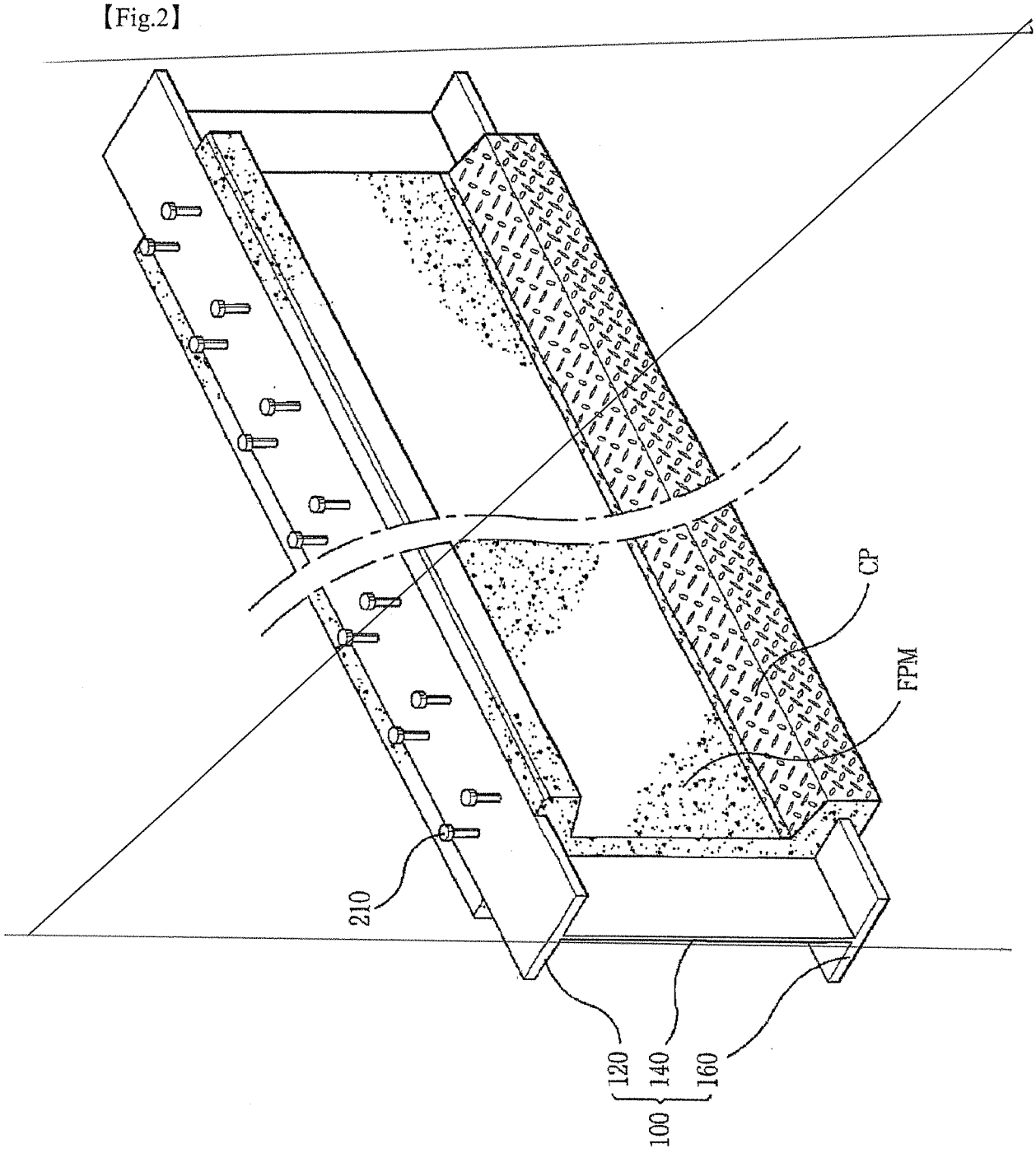

【Fig.1】

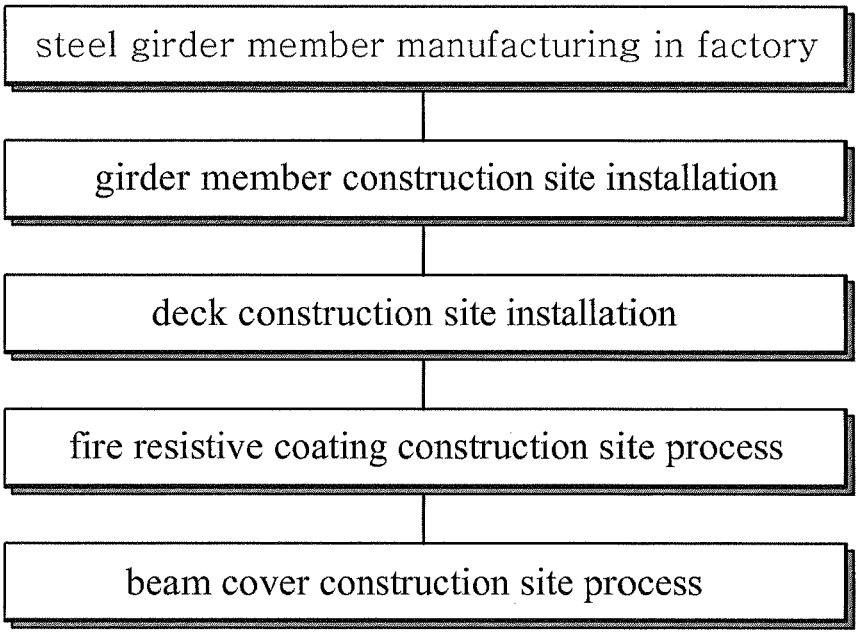
steel girder member manufacturing in factory
girder member construction site installation
deck construction site installation
fire resistive coating construction site process
beam cover construction site process

【Fig.2】

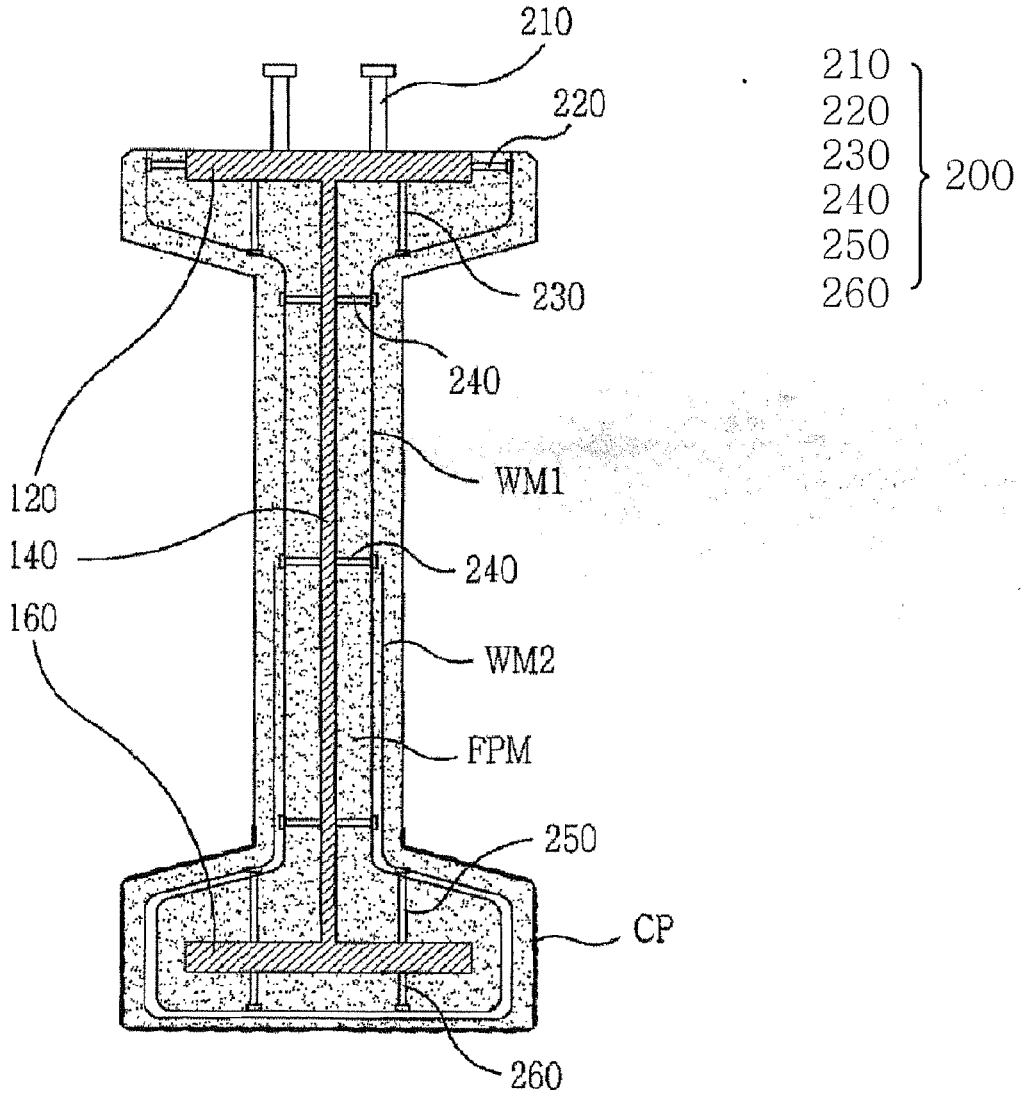
210
220
230
240
250
260
200
210
220
230
240
WM1
120
140
240
160
WM2
FPM
250
CP
260

【Fig.3】

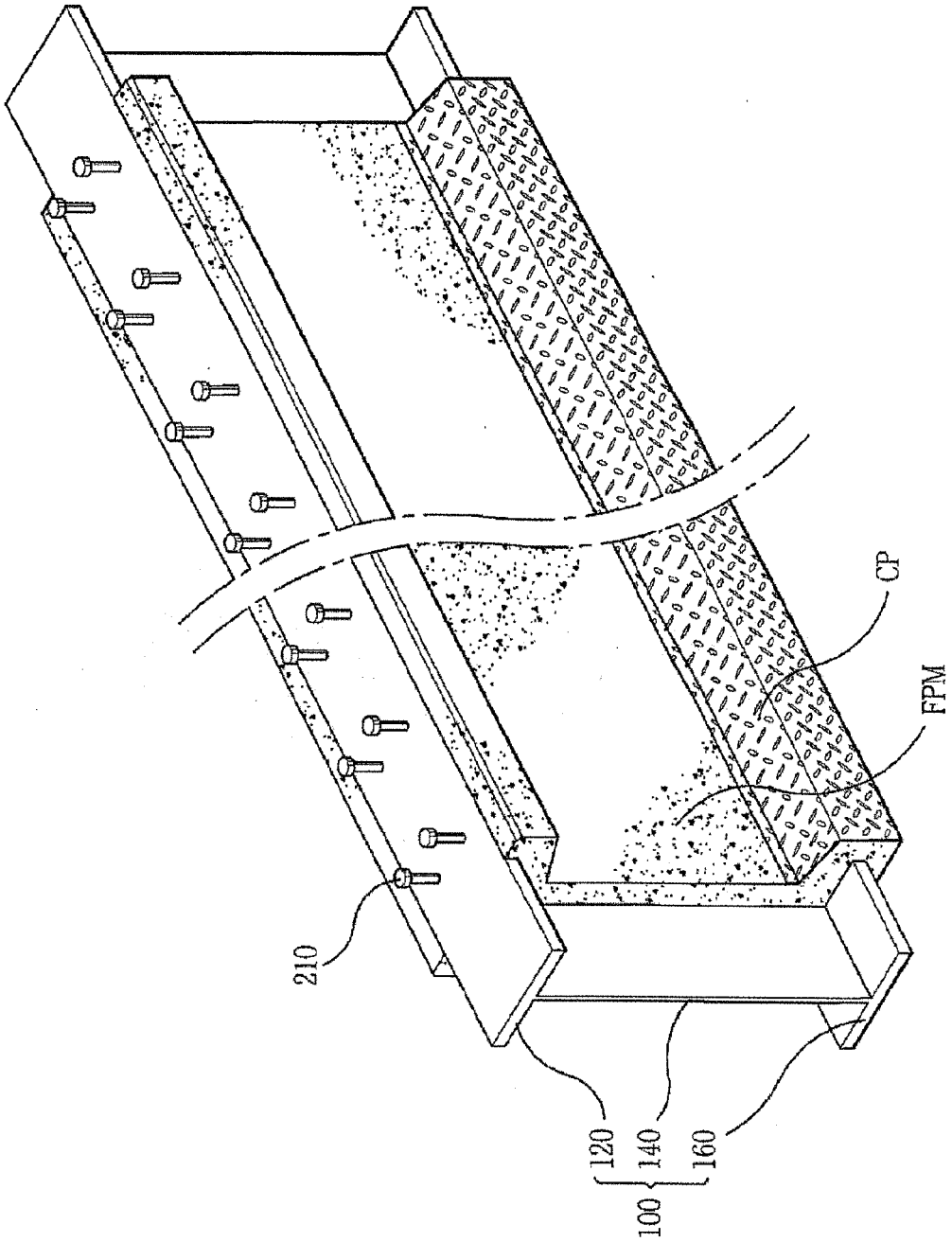

【Fig.4a】

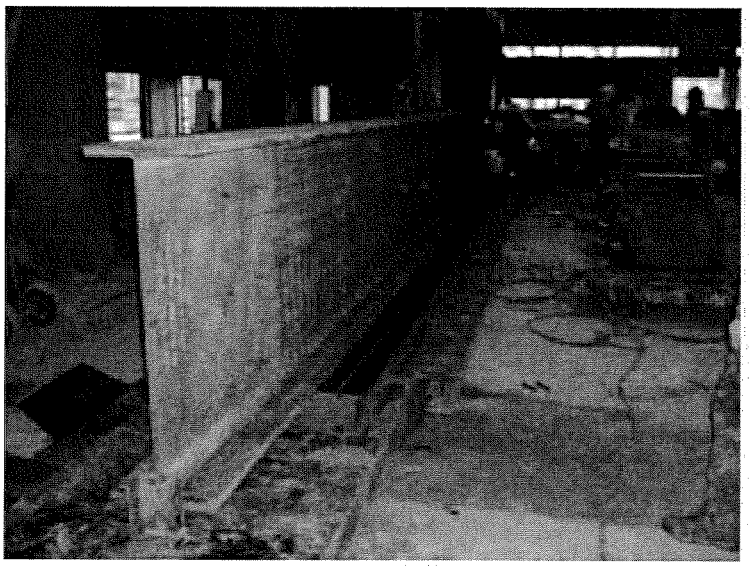

【Fig.4b】

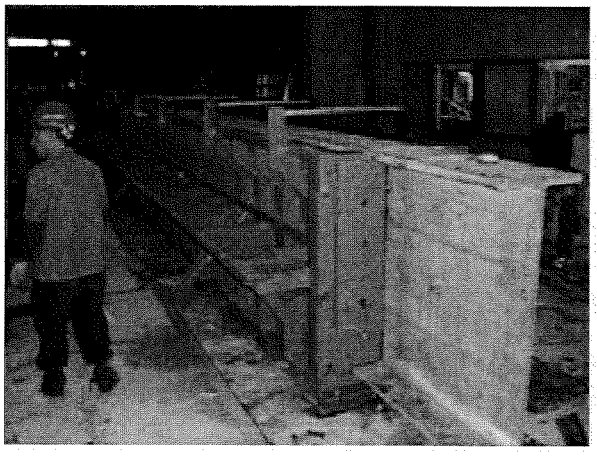

【Fig.4c】

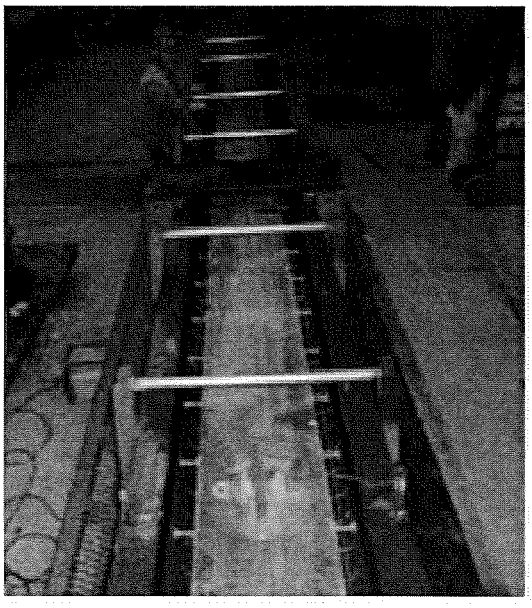

【Fig.4d】

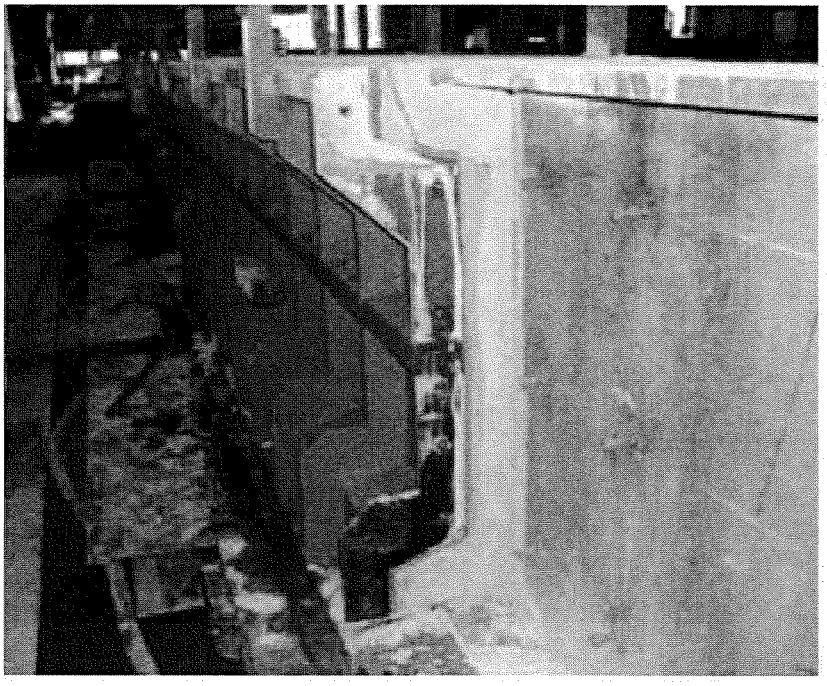

【Fig.4e】

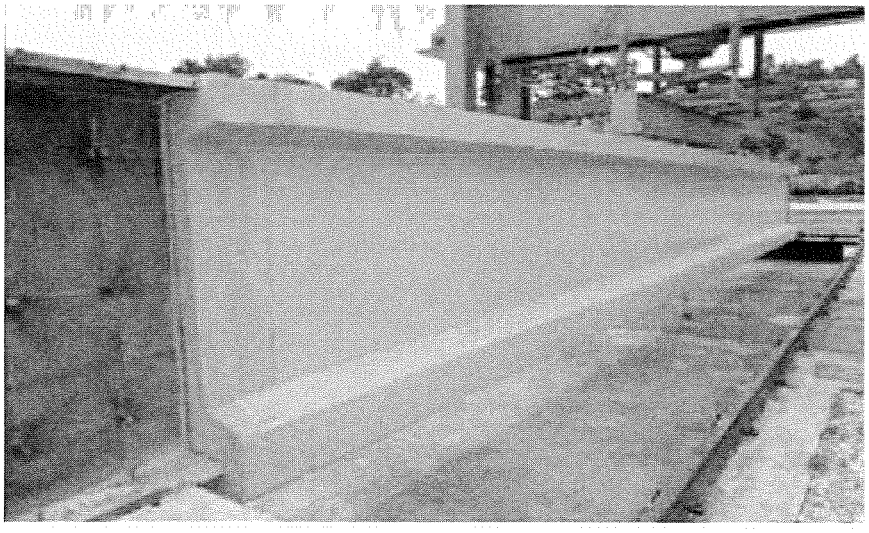

【Fig.4f】



【Fig.5】

W/B (%) water/ binder ratior	Gmax (mm) coarse aggregate maximum sizer	S/a (%) fine aggregate ratio	quantity of material per unit (kg/m^3)					
			W water	C cement	f/a fly ash	S fine aggregate	G coarse aggregate	AD chemical agent
33.6	13	52.9	173	463	52	858	782	7.21
AD = high performance polycarboxylate superplasticizer								

【Fig.6】

