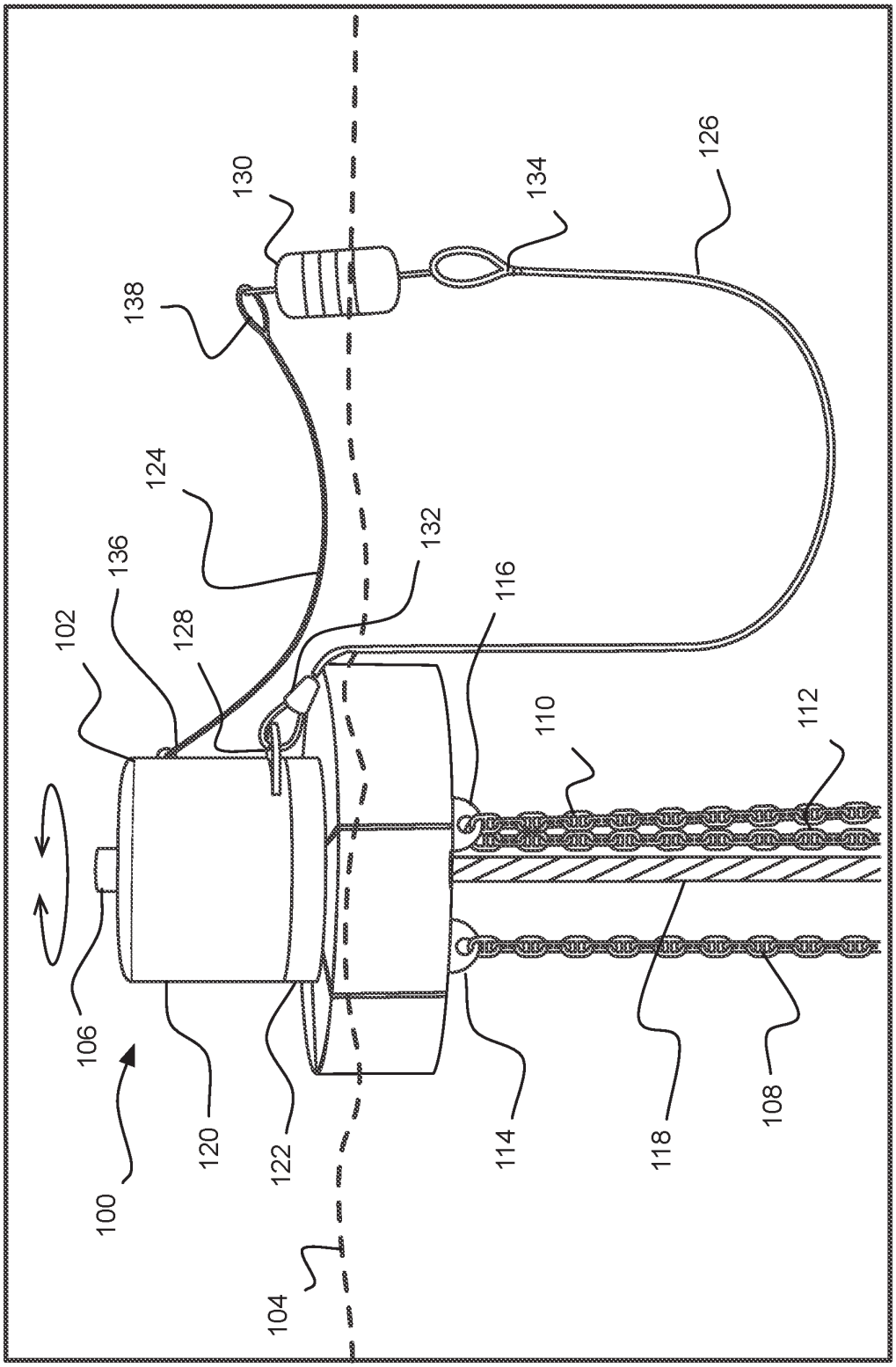
100
102
104
106
108
110
112
114
116
118
120
122
124
126
128
130
132
134
136
138

Figure 1

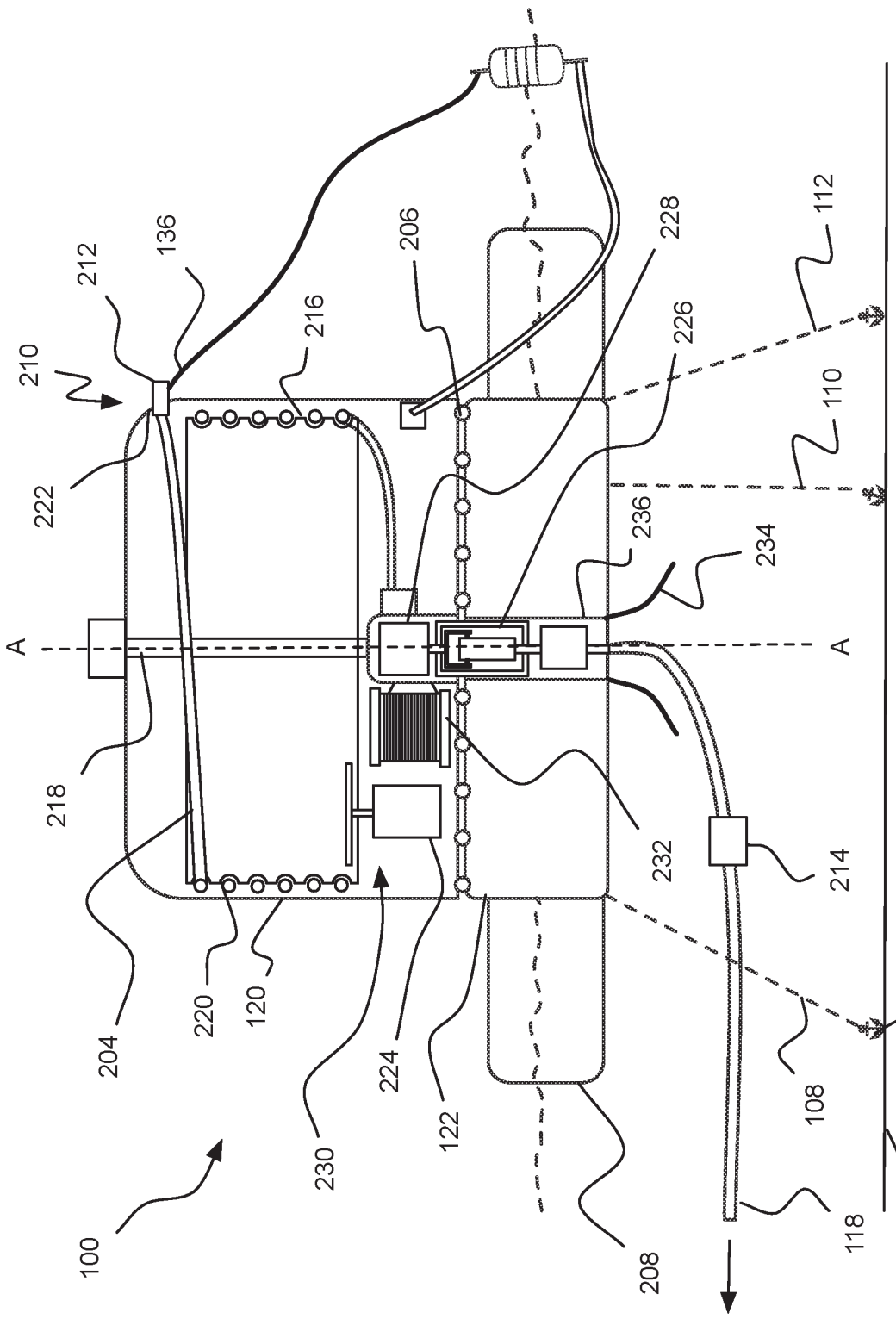
100
200
202
204
206
208
210
212
214
216
218
220
222
224
226
228
230
232
234
236
108
110
112
118
120
122
136
A
A

Figure 2

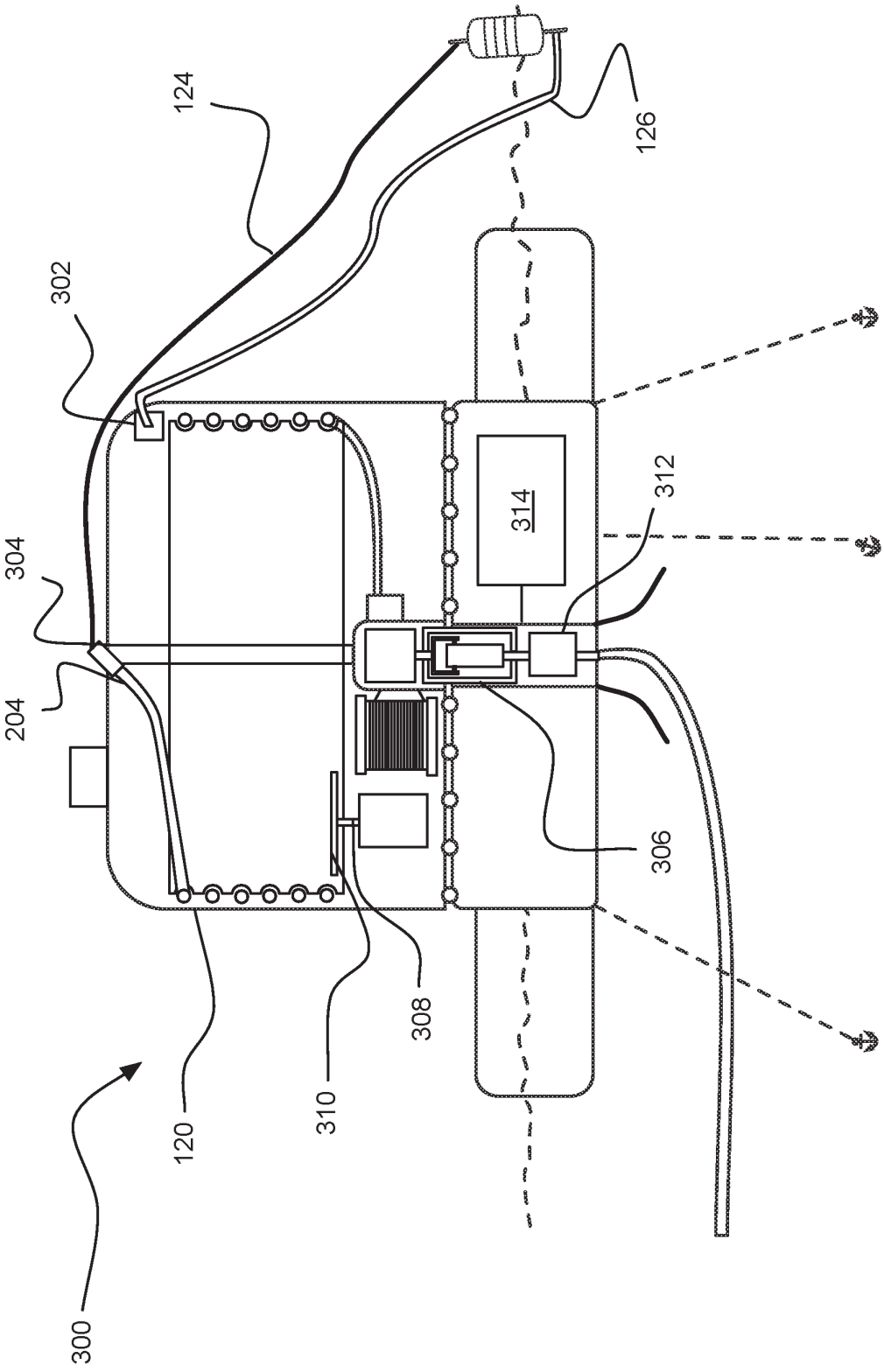

Figure 3

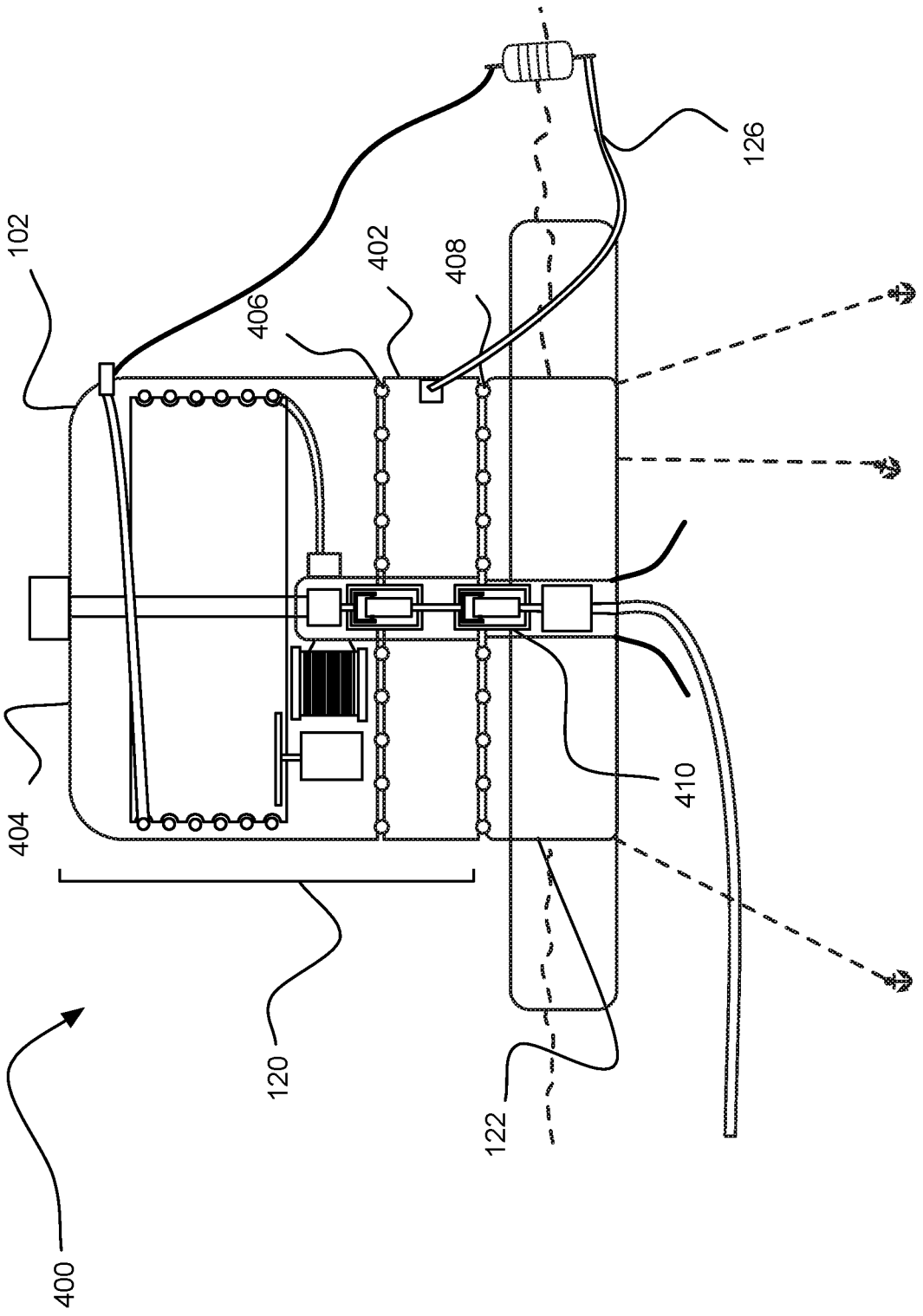

Figure 4

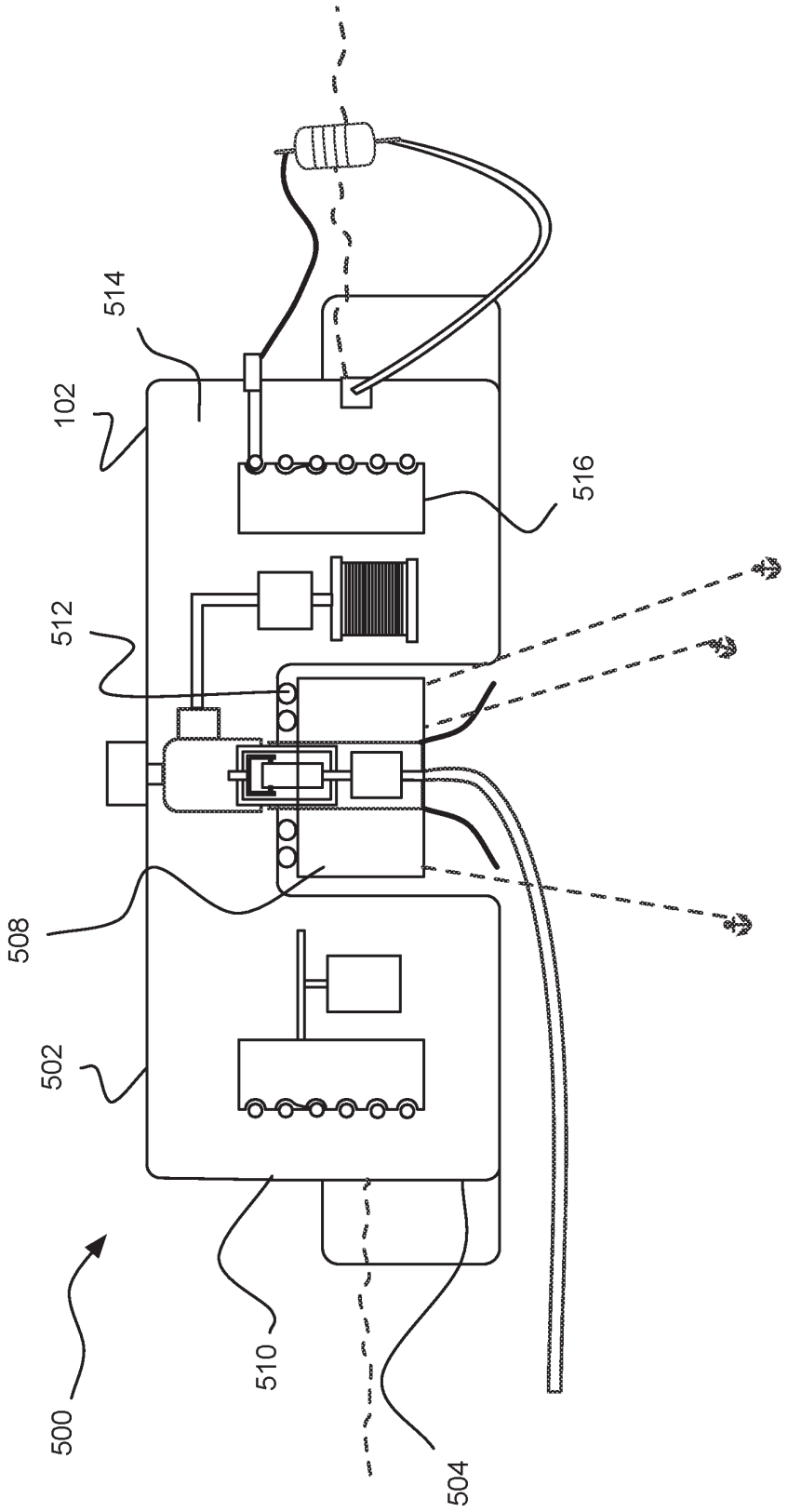

Figure 5

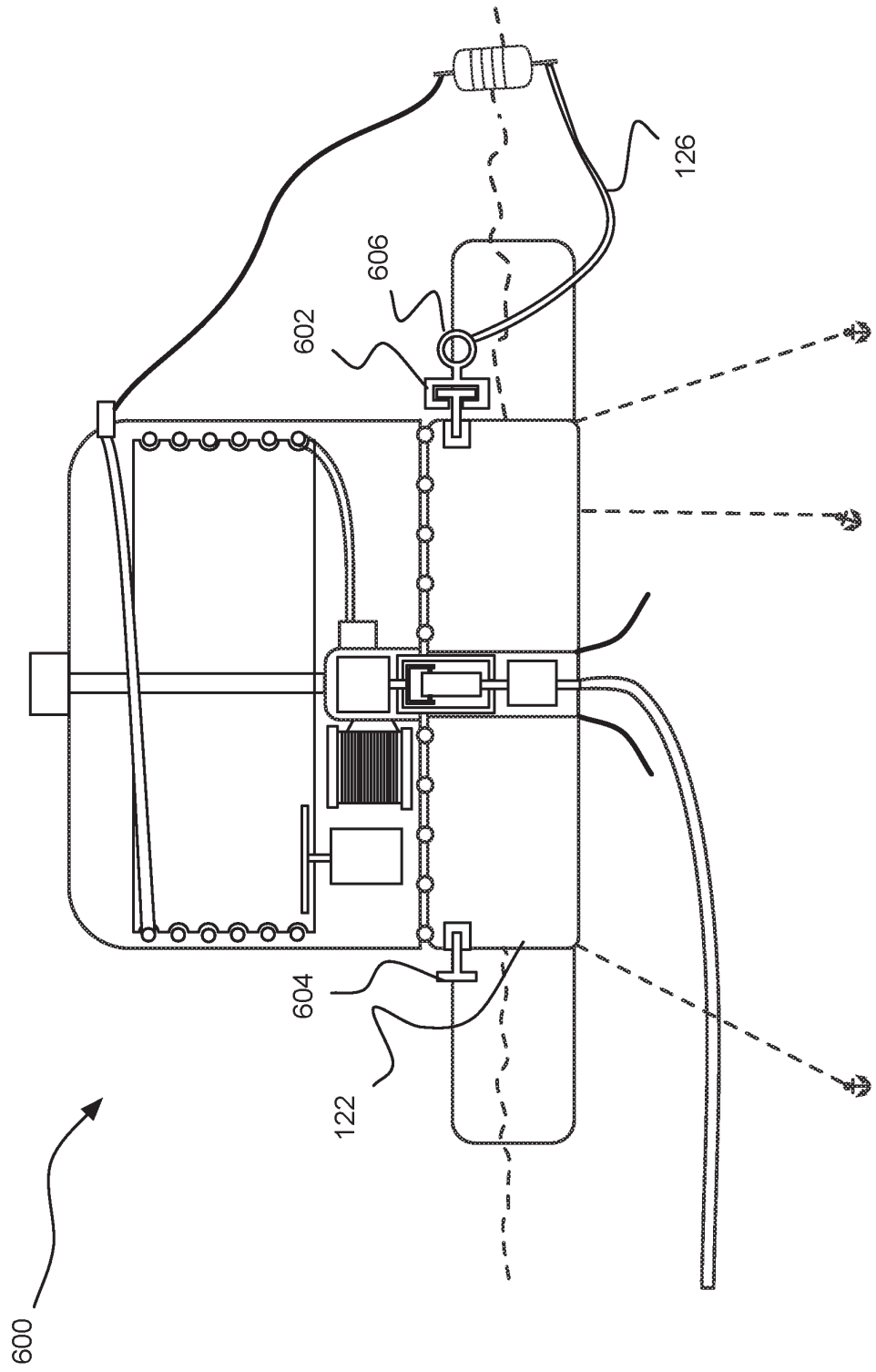

Figure 6

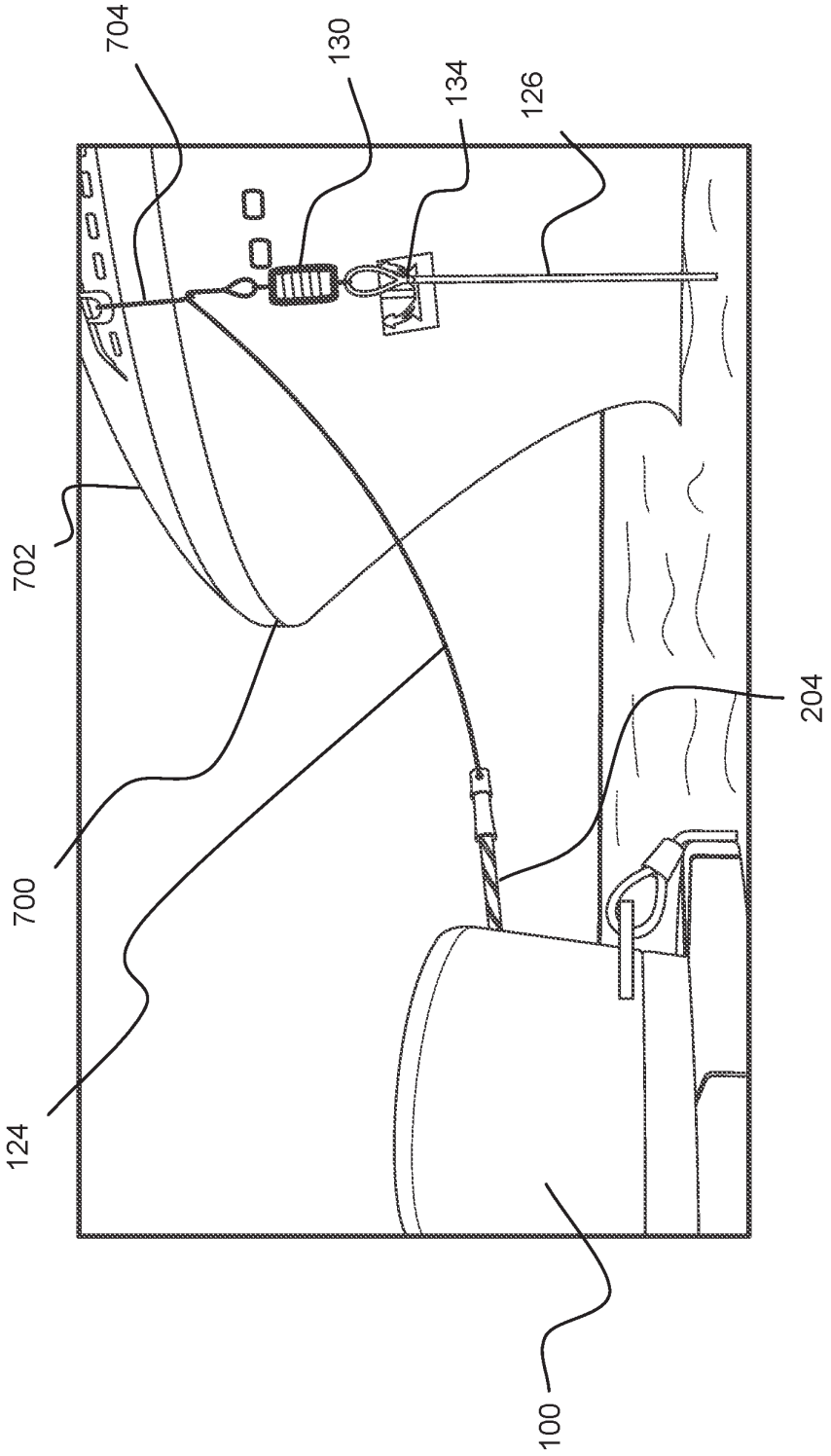

Figure 7

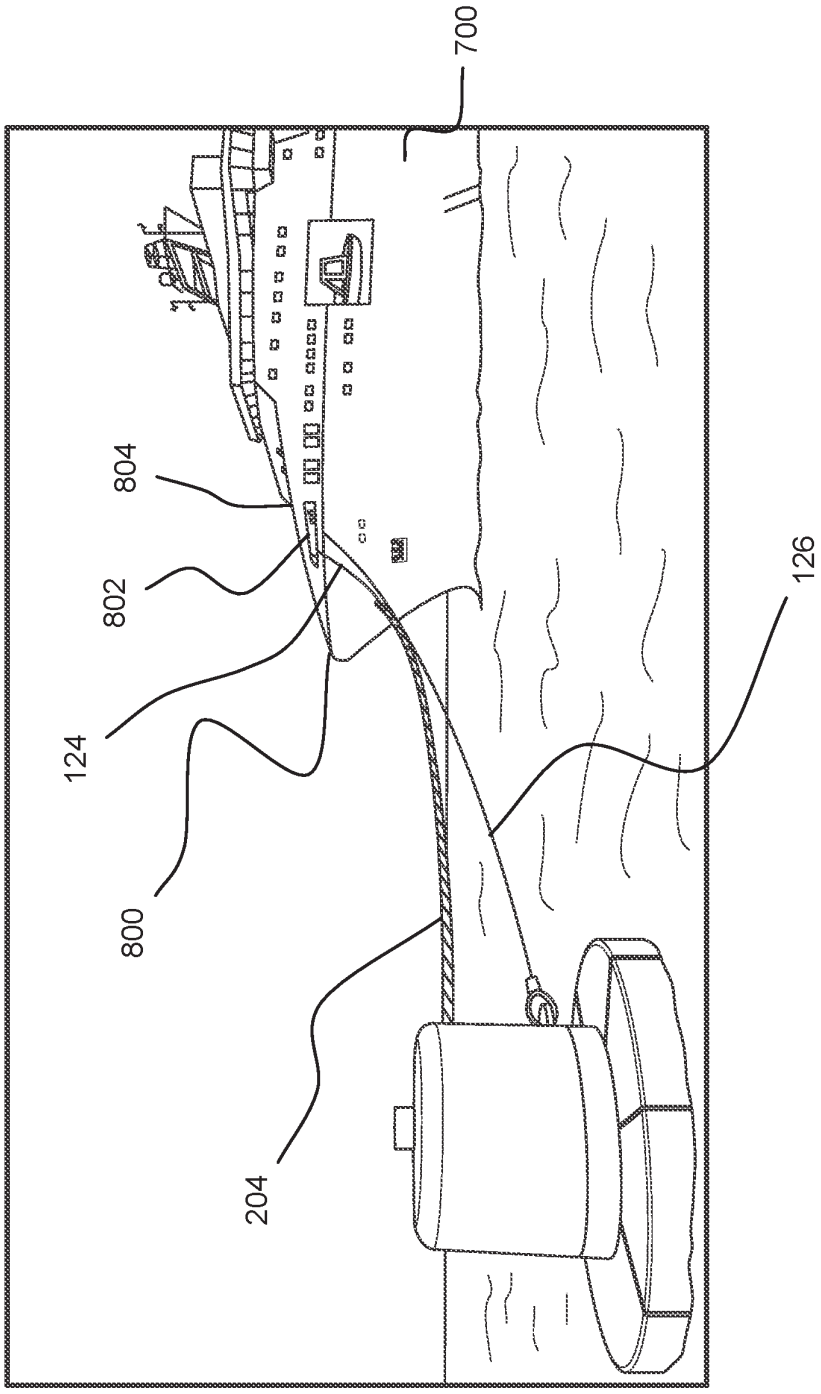

Figure 8

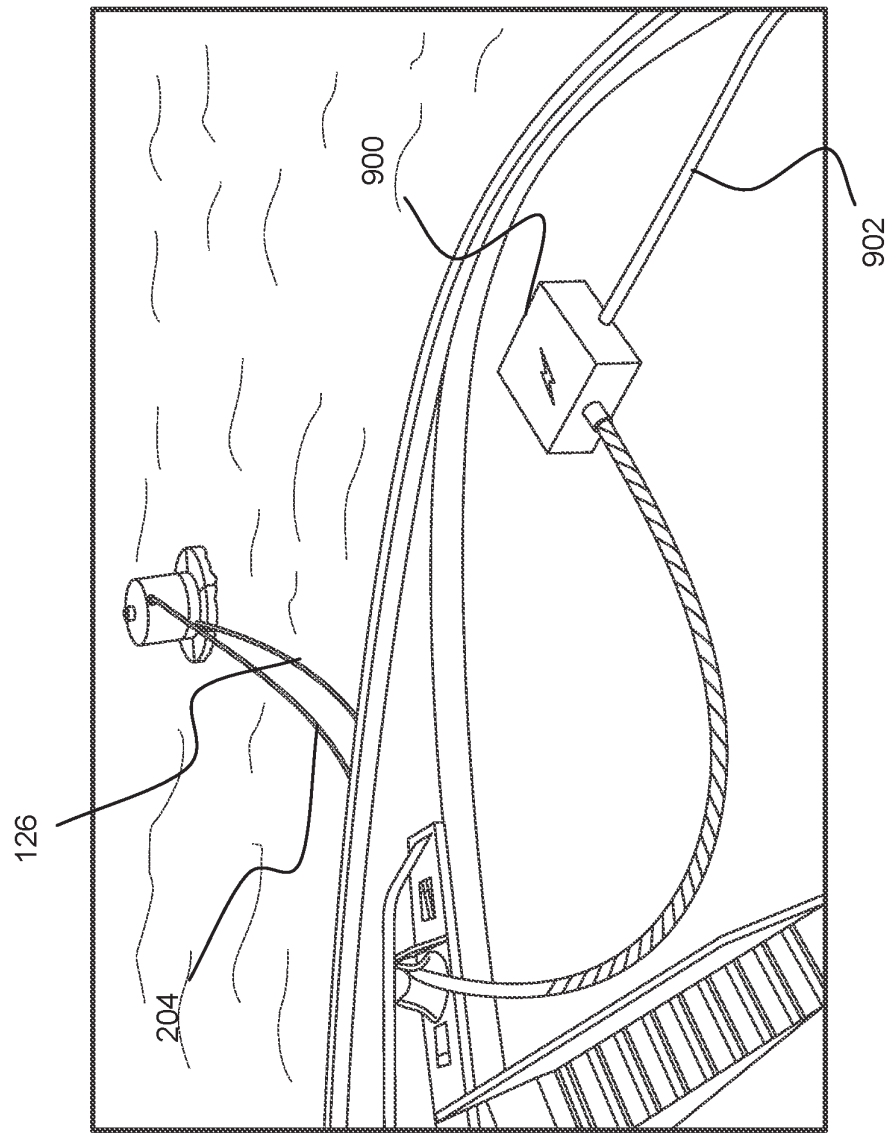

Figure 9

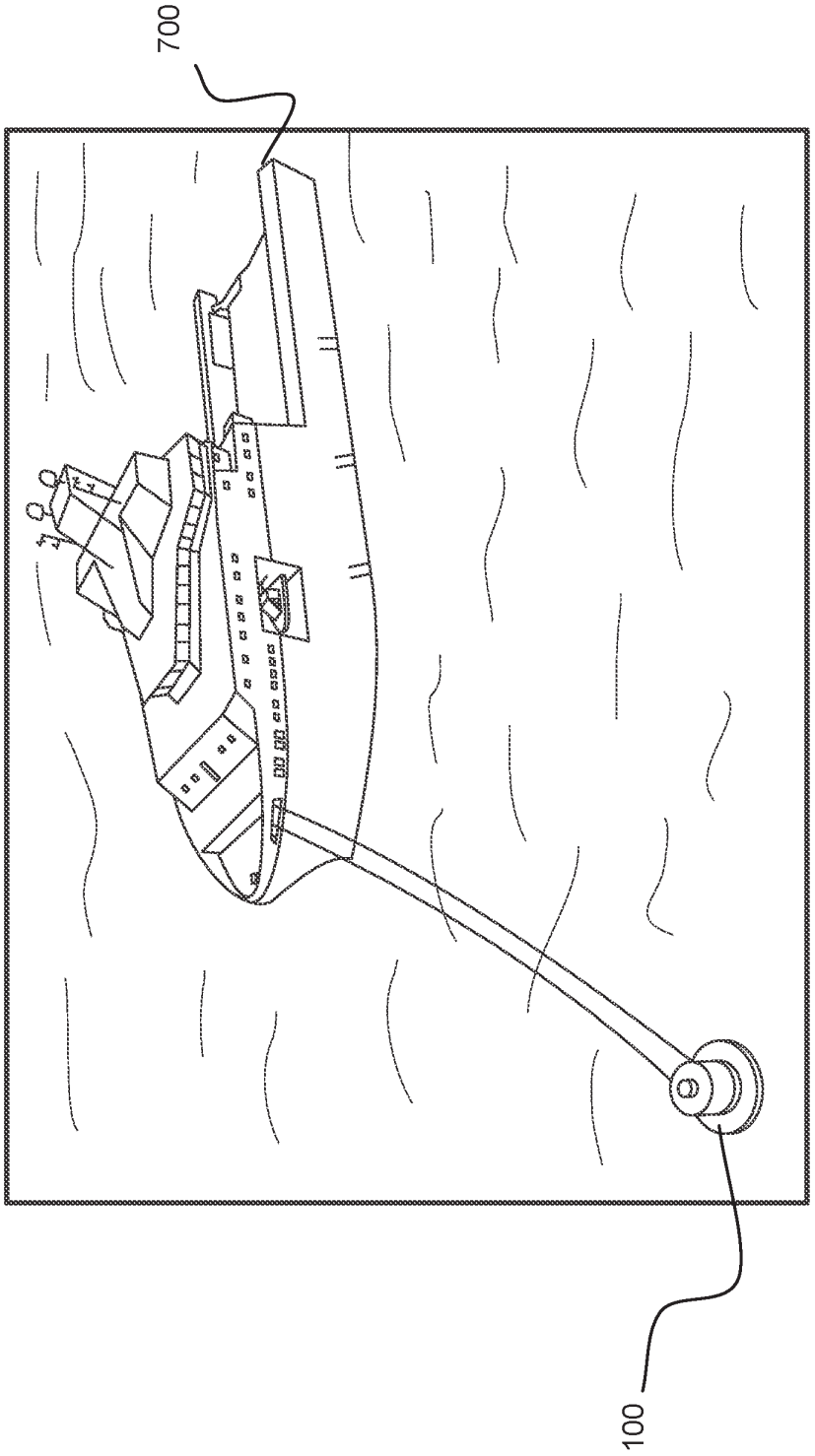

Figure 10

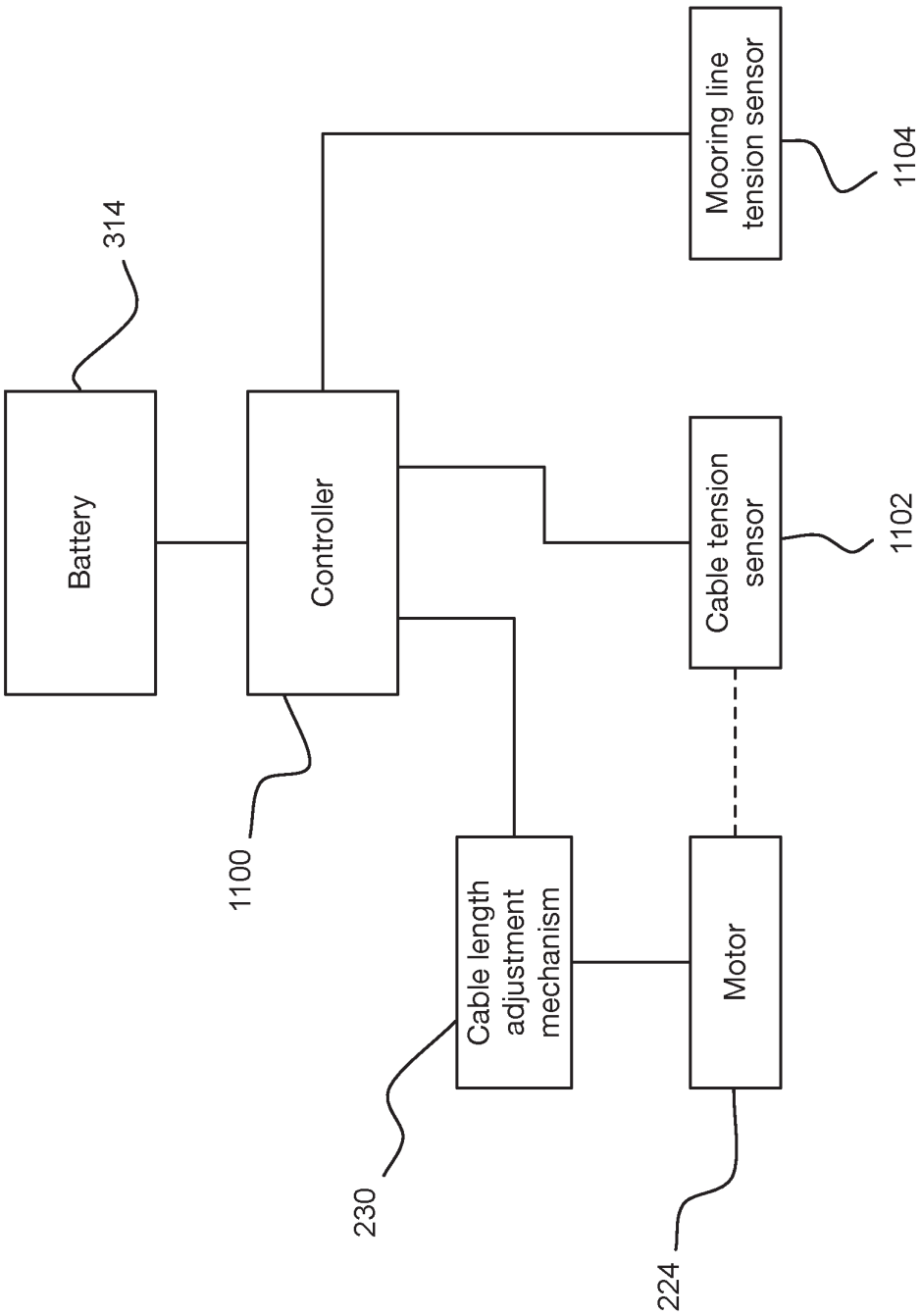
Battery
314
Controller
1100
Mooring line tension sensor
1104
Cable tension sensor
1102
Cable length adjustment mechanism
230
Motor
224

Figure 11

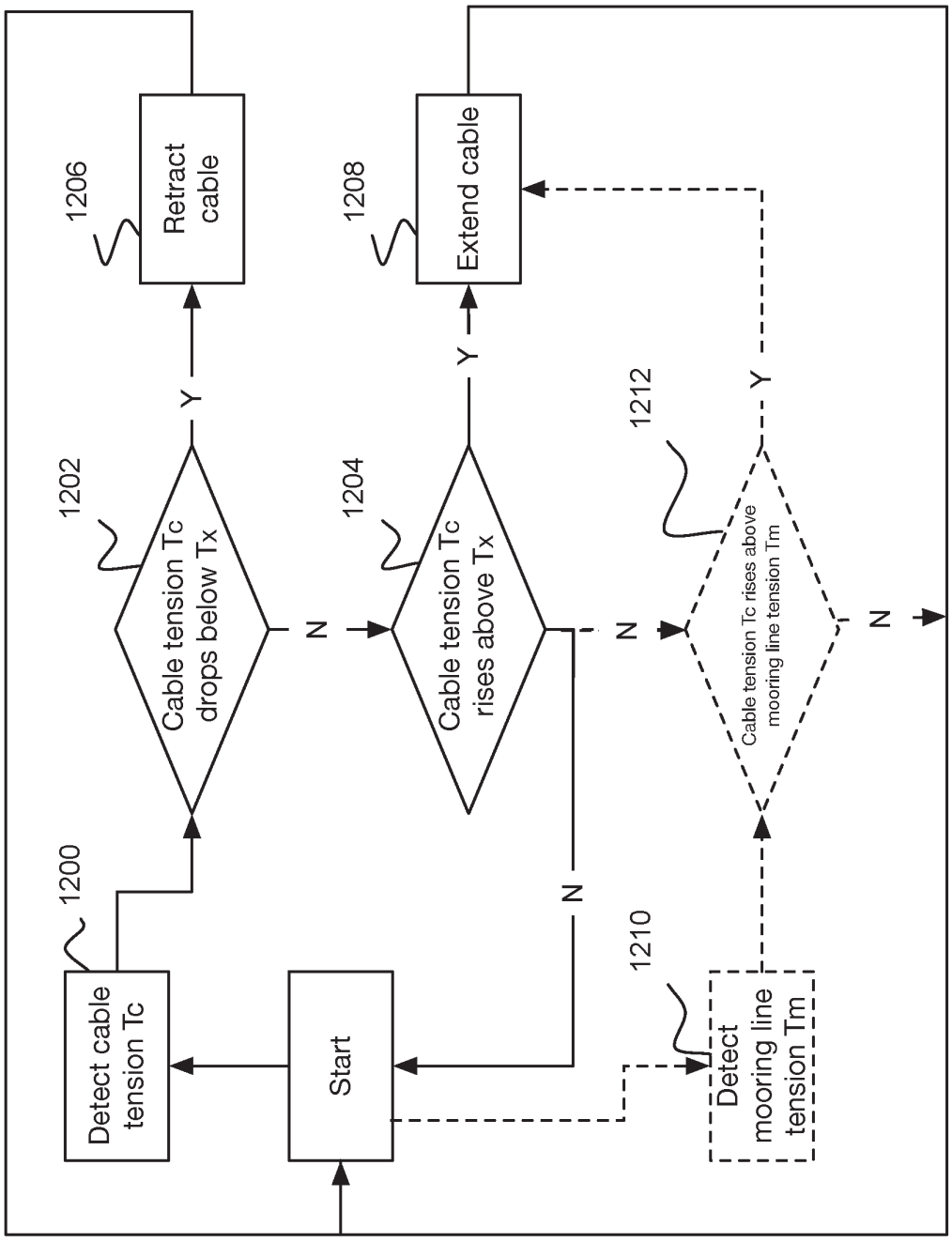
Start
Detect cable tension Tc
1200
Cable tension Tc drops below Tx
1202
Retract cable
1206
Cable tension Tc rises above Tx
1204
Extend cable
1208
Detect mooring line tension Tm
1210
Cable tension Tc rises above mooring line tension Tm
1212
Y
N
Y
N
Y
N
N

Figure 12