FIG.1

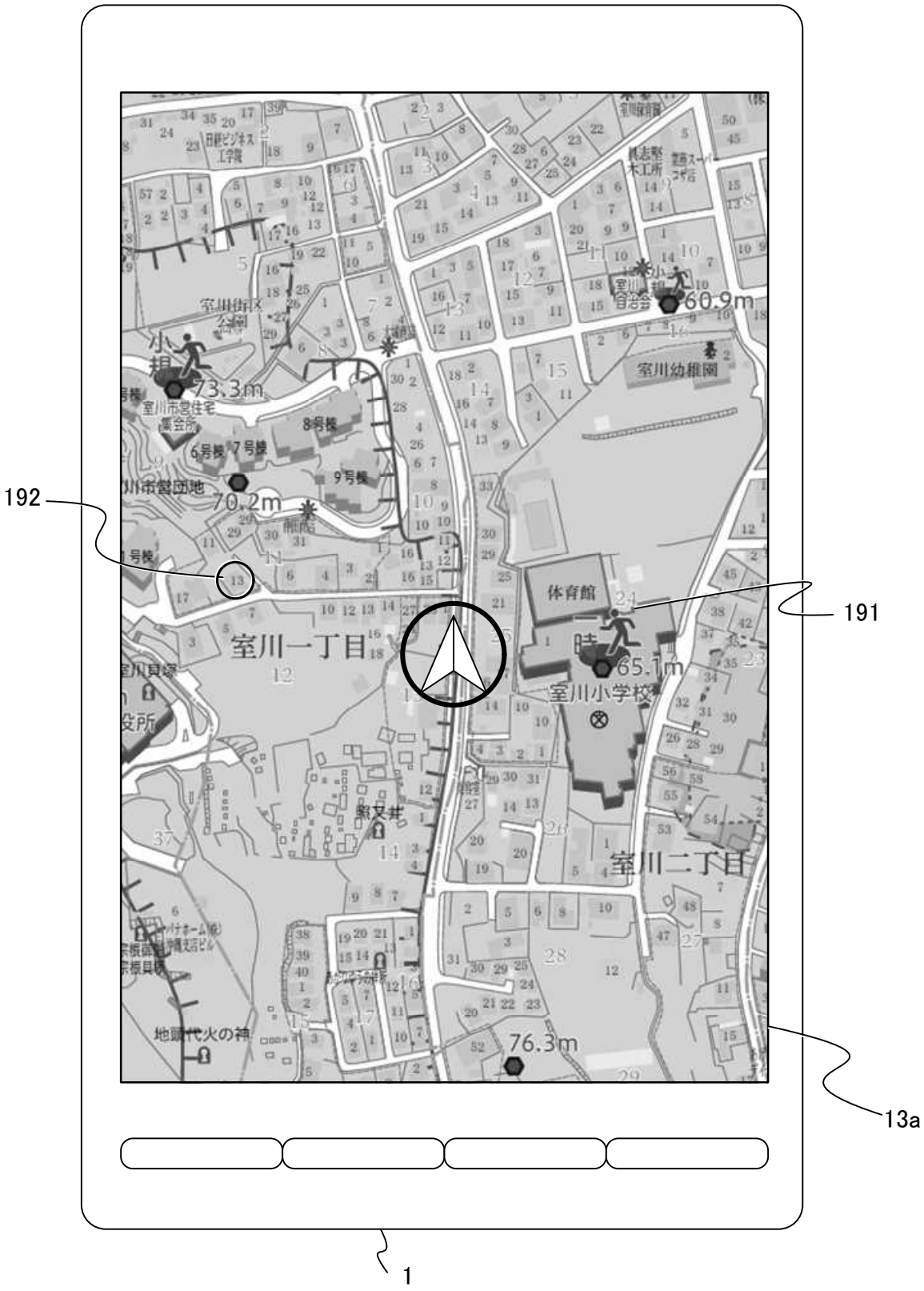
192
191
13a
1
73.3m
70.2m
60.9m
65.1m
76.3m
室川一丁目
室川二丁目
室川小学校
体育館
室川幼稚園
室川市営住宅
6号棟
7号棟
8号棟
9号棟
地頭代火の神

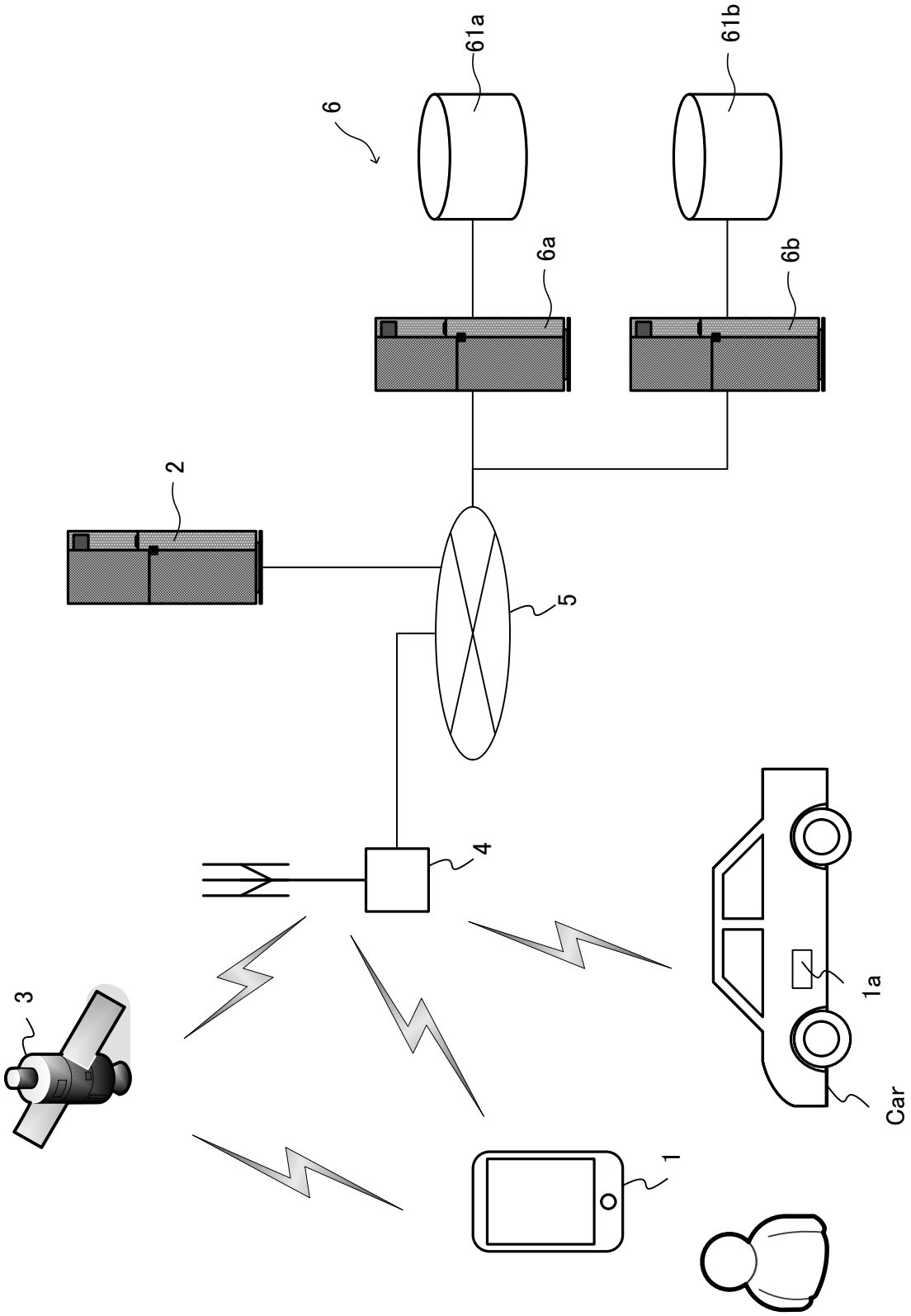

FIG.2

FIG.3

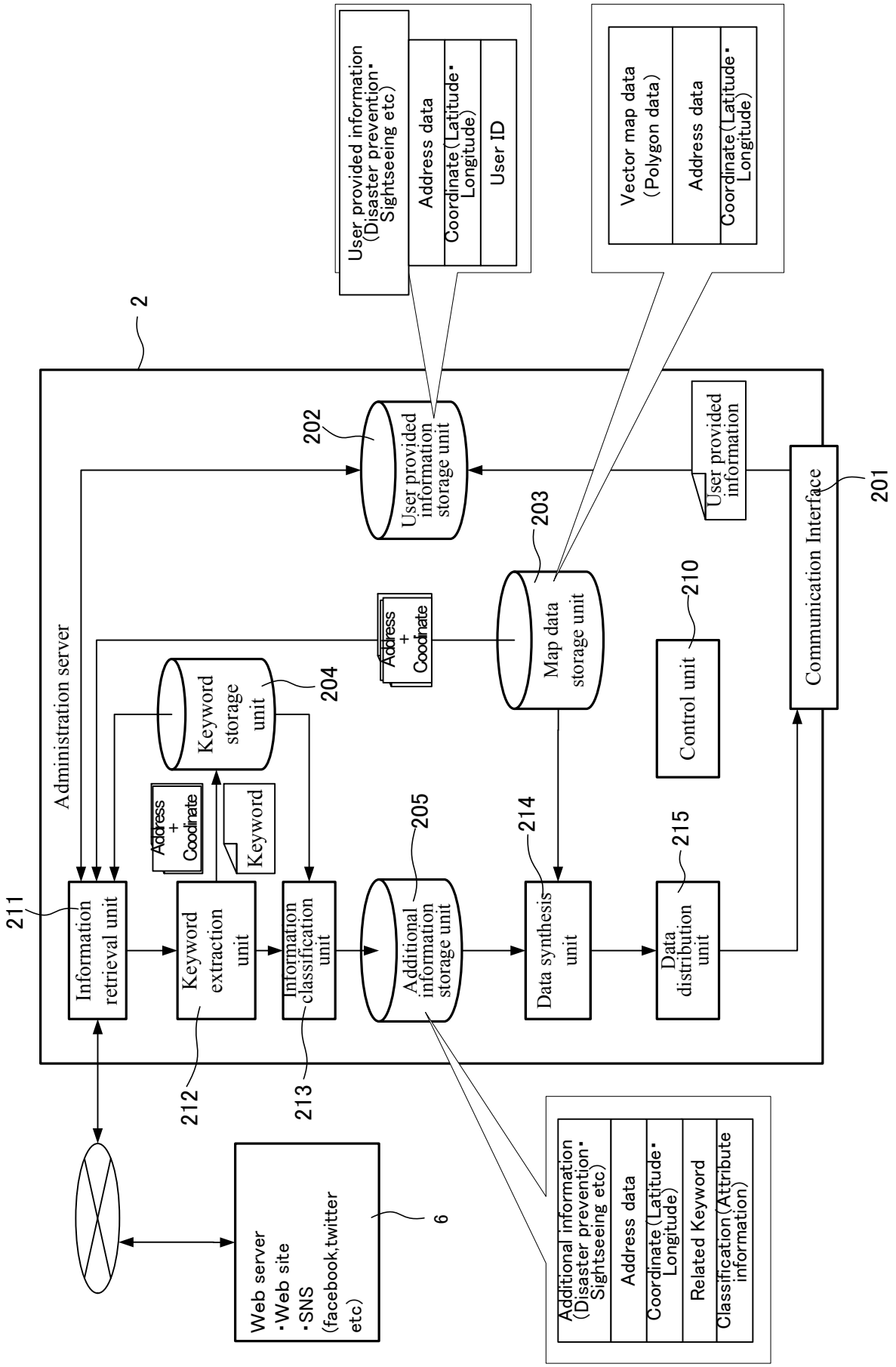
2
Administration server
211
Information retrieval unit
Keyword extraction unit
212
Information classification unit
213
Additional information storage unit
205
Data synthesis unit
214
Data distribution unit
215
Keyword storage unit
204
Address + Coodinate
Keyword
Map data storage unit
203
Control unit
210
User provided information storage unit
202
User provided information
Communication Interface
201
User provided information (Disaster prevention・Sightseeing etc)
Address data
Coordinate(Latitude・Longitude)
User ID
Vector map data (Polygon data)
Address data
Coordinate(Latitude・Longitude)
Additional information (Disaster prevention・Sightseeing etc)
Address data
Coordinate(Latitude・Longitude)
Related Keyword
Classification(Attribute information)
Web server
・Web site
・SNS
(facebook,twitter etc)
6

FIG.4

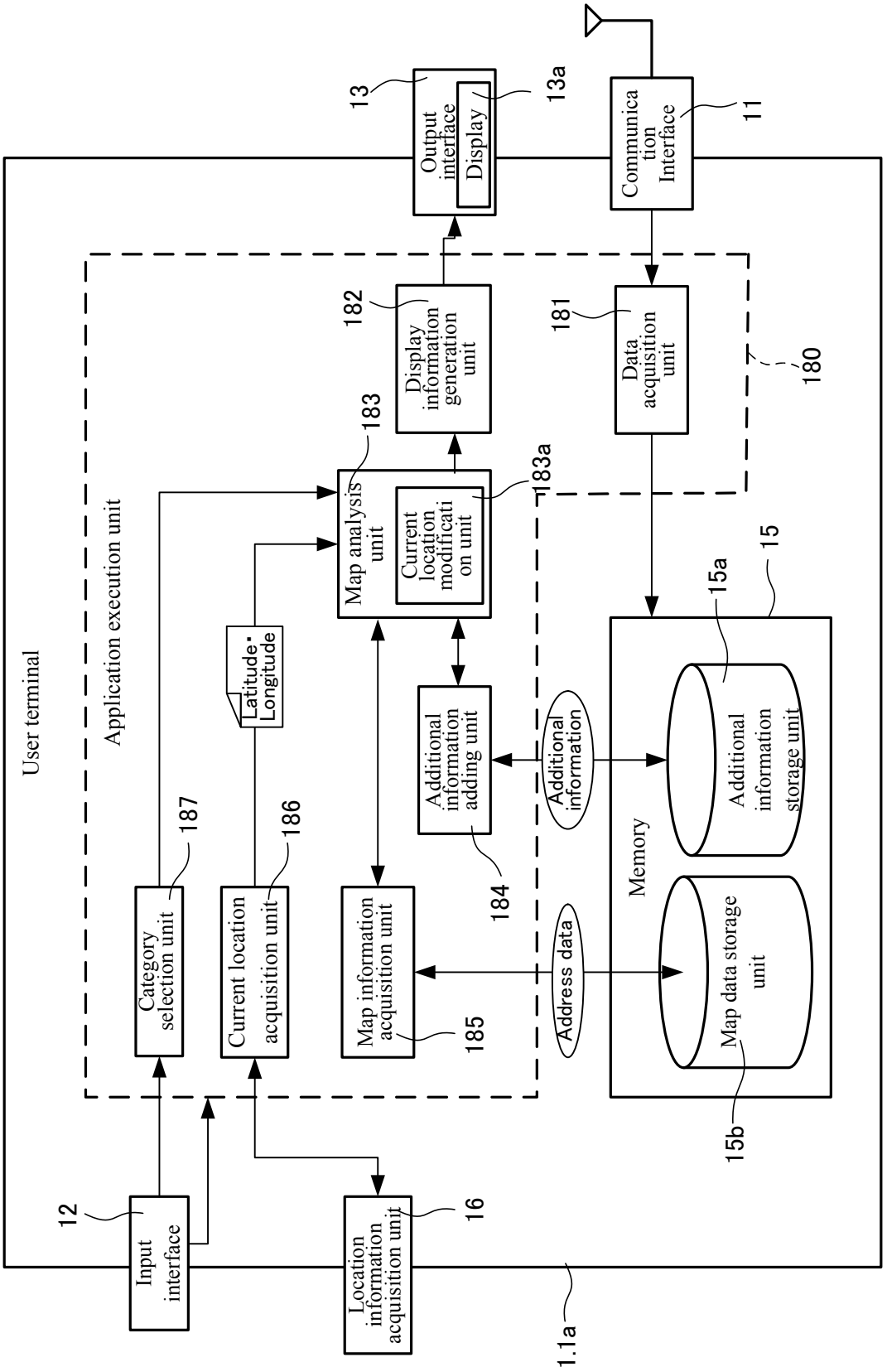
User terminal
Application execution unit
Input interface
12
Location information acquisition unit
16
1.1a
Category selection unit
187
Current location acquisition unit
186
Latitude・Longitude
Map information acquisition unit
185
Map analysis unit
183
Current location modification unit
183a
Additional information adding unit
184
Display information generation unit
182
Data acquisition unit
181
180
Output interface
Display
13
13a
Communication Interface
11
Memory
15
15a
Additional information storage unit
Map data storage unit
15b
Address data
Additional information

FIG.5

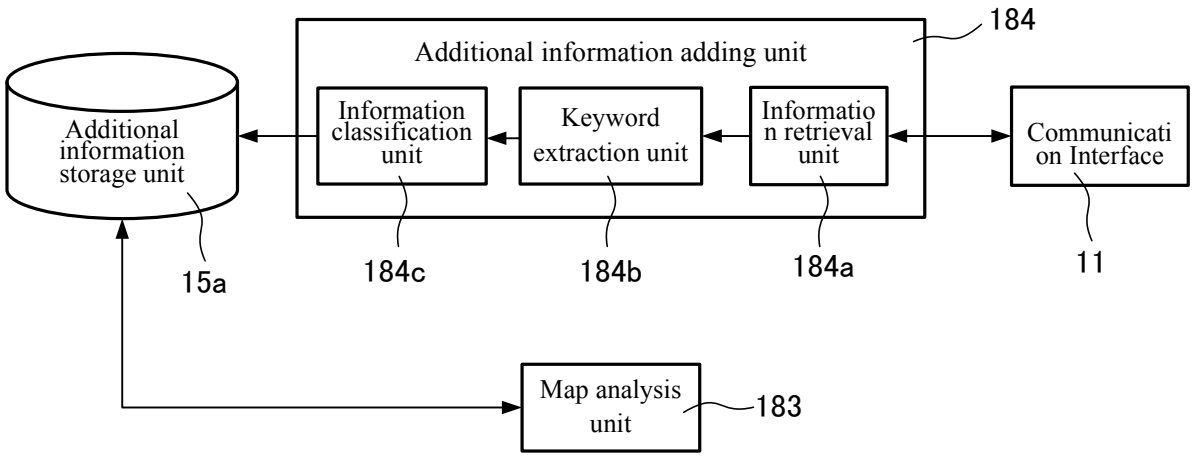
Additional information adding unit
184
Additional information storage unit
Information classification unit
Keyword extraction unit
Information retrieval unit
Communication Interface
15a
184c
184b
184a
11
Map analysis unit
183

FIG.6

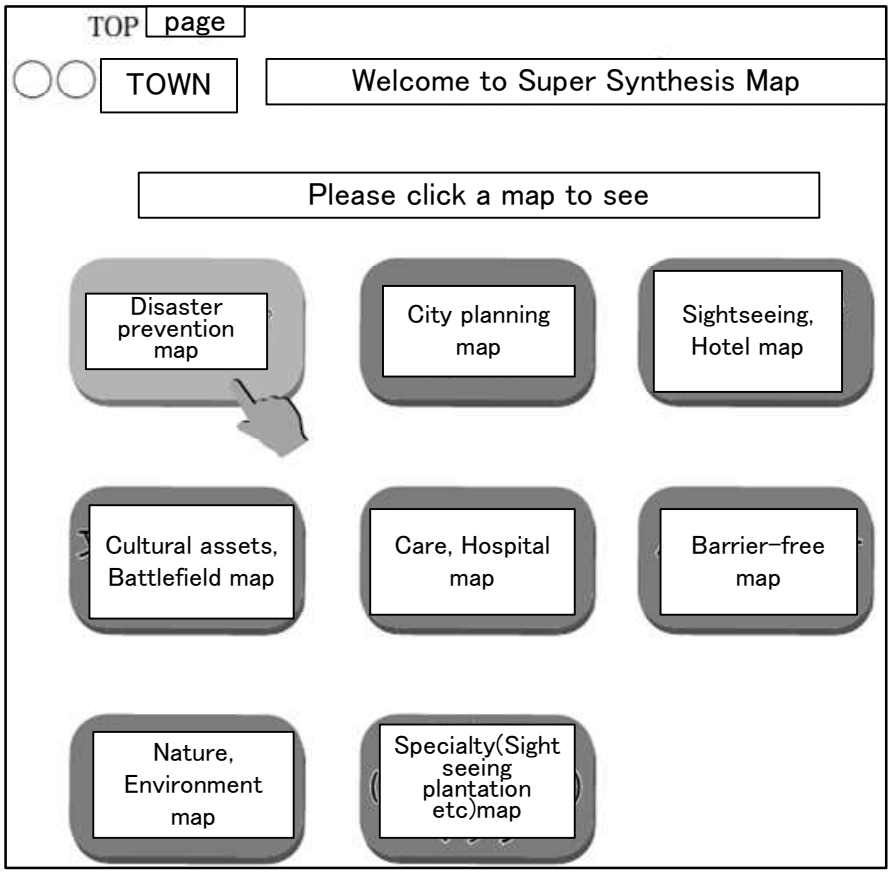
TOP page
TOWN
Welcome to Super Synthesis Map
Please click a map to see
Disaster prevention map
City planning map
Sightseeing, Hotel map
Cultural assets, Battlefield map
Care, Hospital map
Barrier-free map
Nature, Environment map
Specialty(Sightseeing plantation etc)map

FIG.7

(a)

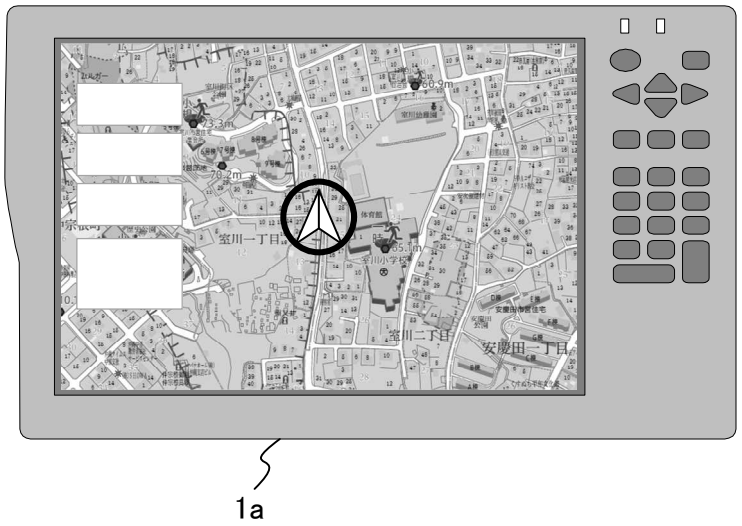

(b)

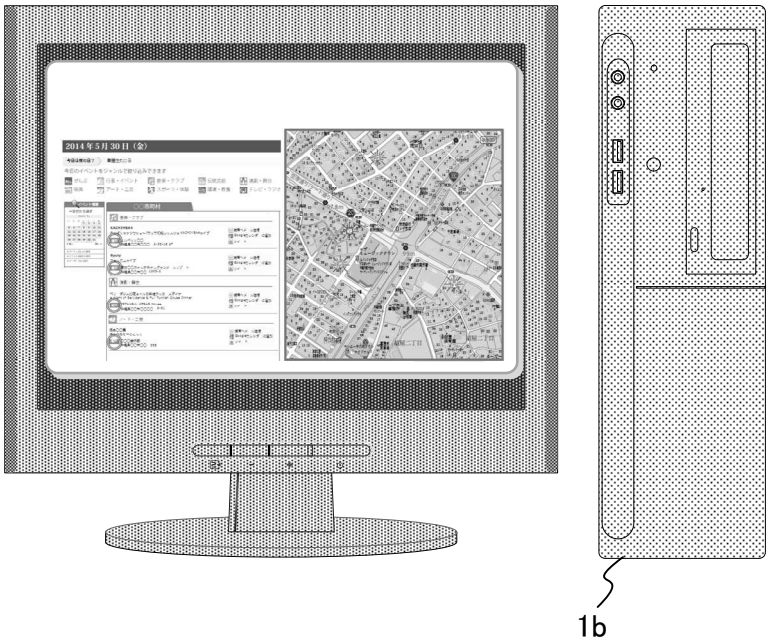

FIG.8

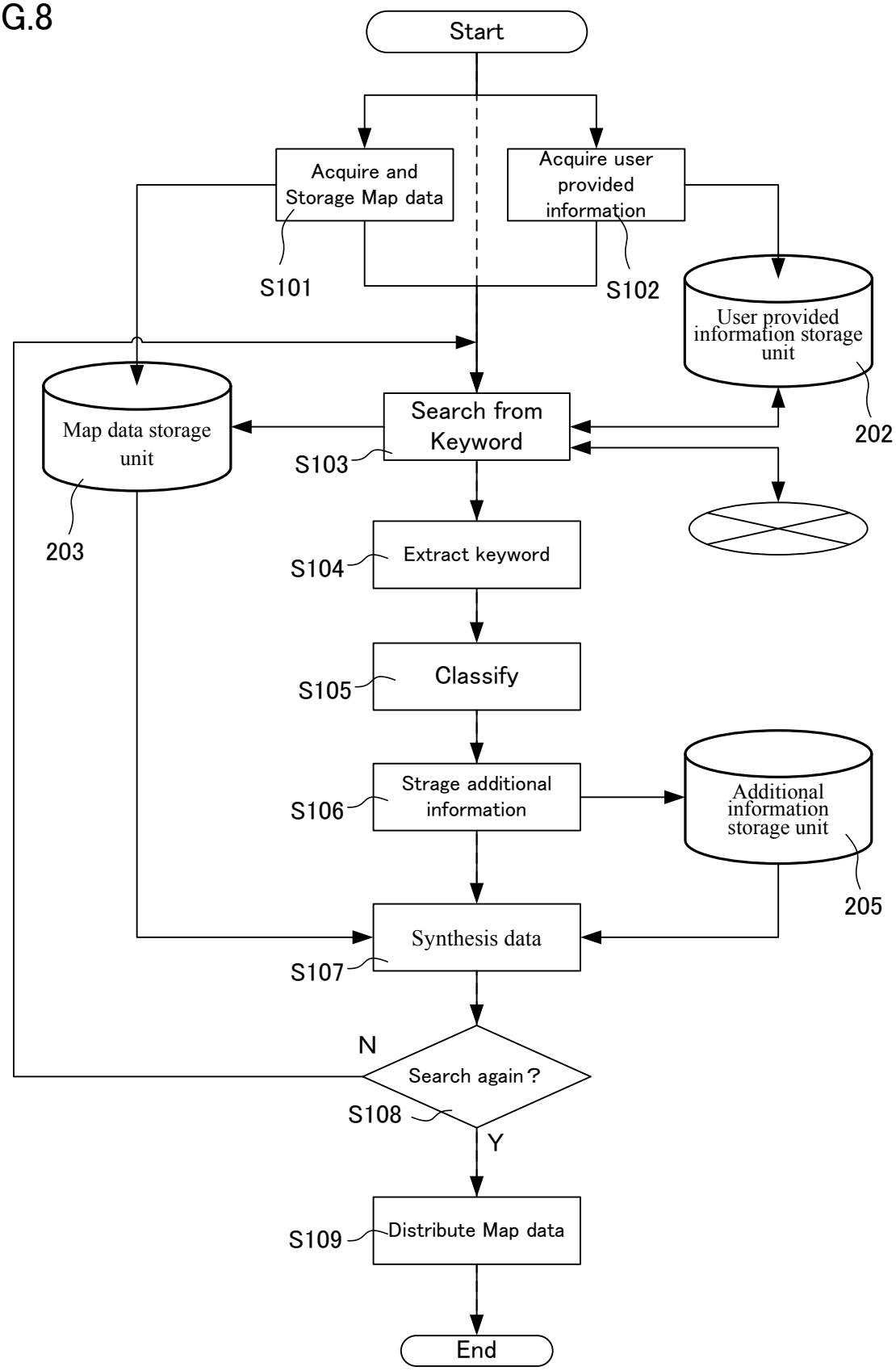
Start
Acquire and Storage Map data
Acquire user provided information
S101
S102
User provided information storage unit
202
Map data storage unit
203
Search from Keyword
S103
Extract keyword
S104
Classify
S105
Strage additional information
S106
Additional information storage unit
205
Synthesis data
S107
N
Search again？
S108
Y
Distribute Map data
S109
End

FIG.9

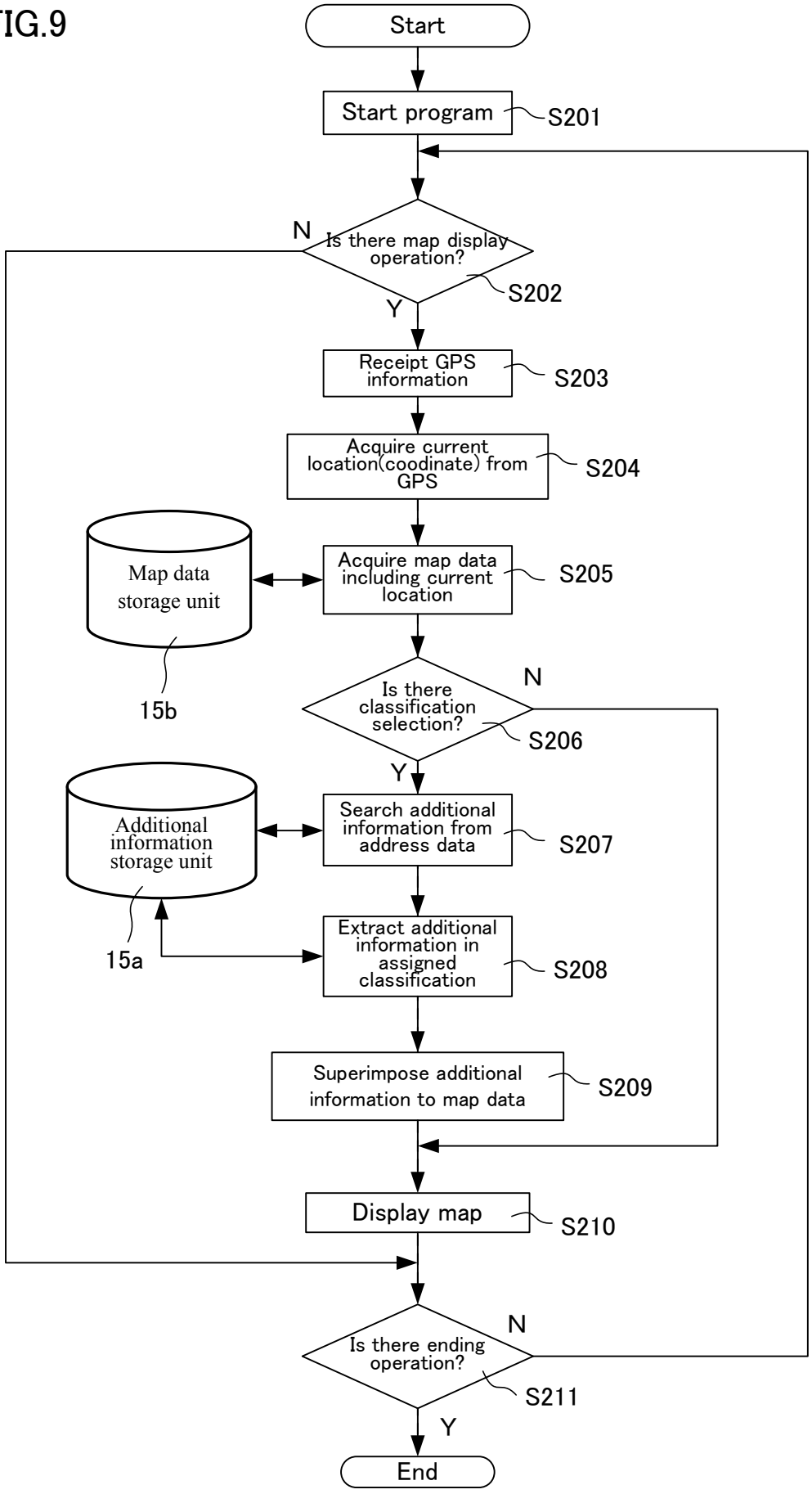
Start
Start program
S201
Is there map display operation?
N
Y
S202
Receipt GPS information
S203
Acquire current location(coodinate) from GPS
S204
Map data storage unit
15b
Acquire map data including current location
S205
Is there classification selection?
N
S206
Y
Additional information storage unit
15a
Search additional information from address data
S207
Extract additional information in assigned classification
S208
Superimpose additional information to map data
S209
Display map
S210
Is there ending operation?
N
S211
Y
End

FIG.10

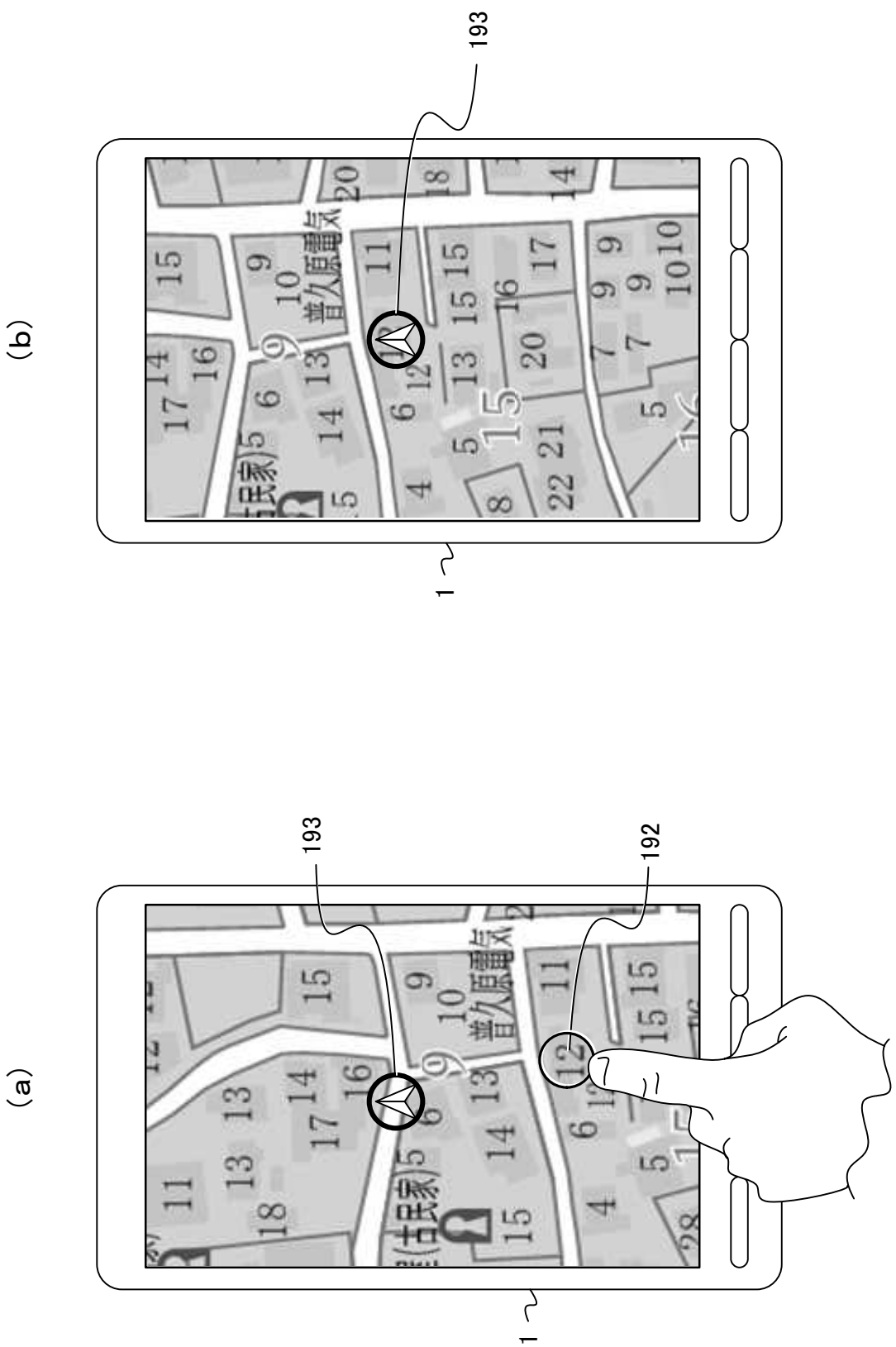

FIG.11

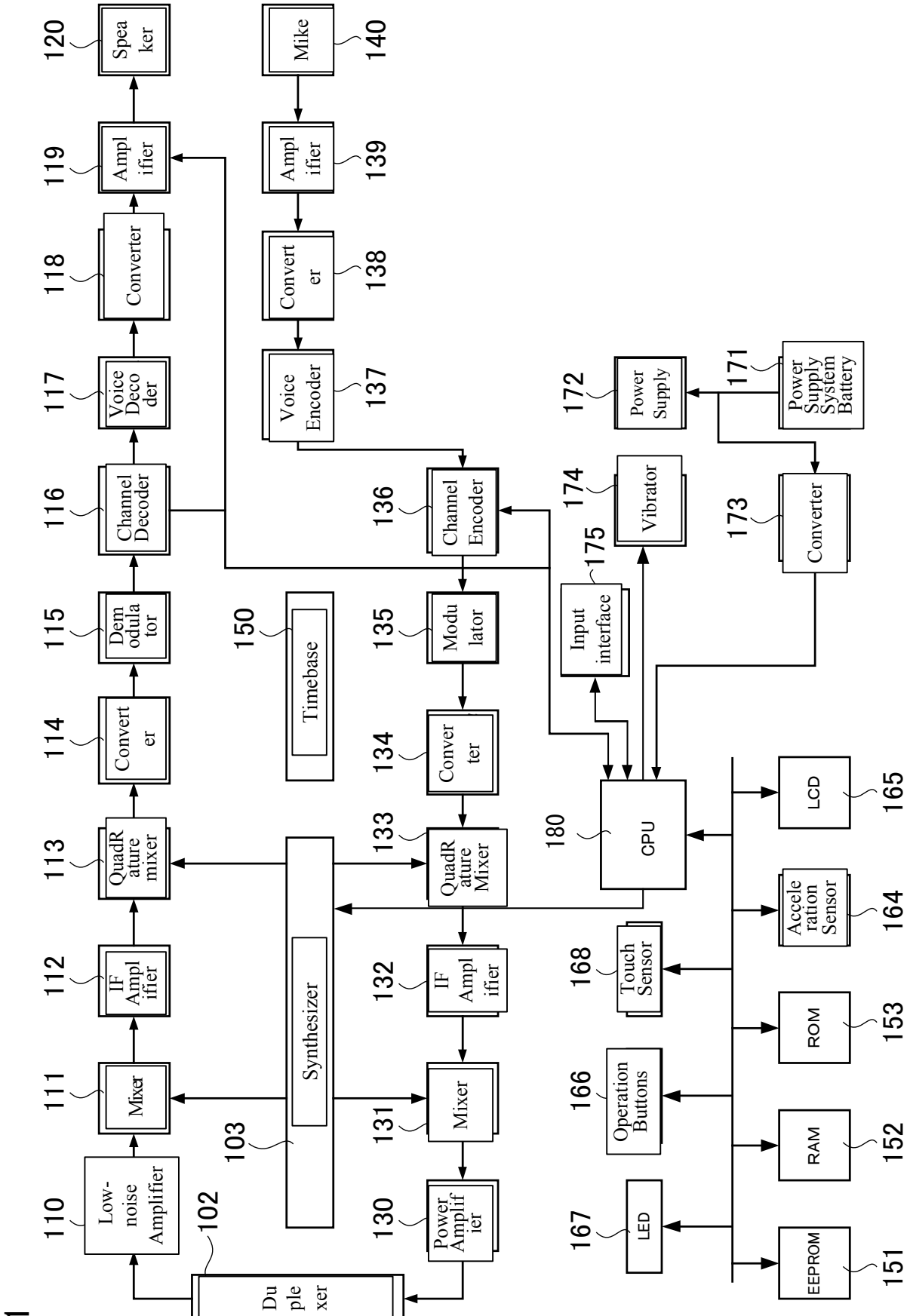
101
Antenna
102
Duplexer
103
Synthesizer
110
Low-noise Amplifier
111
Mixer
112
IF Amplifier
113
QuadRature mixer
114
Converter
115
Demodulator
116
Channel Decoder
117
Voice Decoder
118
Converter
119
Amplifier
120
Speaker
130
Power Amplifier
131
Mixer
132
IF Amplifier
133
QuadRature Mixer
134
Converter
135
Modulator
136
Channel Encoder
137
Voice Encoder
138
Converter
139
Amplifier
140
Mike
150
Timebase
151
EEPROM
152
RAM
153
ROM
164
Acceleration Sensor
165
LCD
166
Operation Buttons
167
LED
168
Touch Sensor
171
Power Supply System Battery
172
Power Supply
173
Converter
174
Vibrator
175
Input interface
180
CPU