(12) INTERNATIONAL APPLICATION PUBLISHED UNDER THE PATENT COOPERATION TREATY (PCT)

(19) World Intellectual Property Organization
International Bureau

(43) International Publication Date
17 May 2001 (17.05.2001)

PCT

(10) International Publication Number
WO 01/35462 A1

(51) International Patent Classification[7]: H01L 23/525, 23/532

(21) International Application Number: PCT/US00/24087

(22) International Filing Date: 31 August 2000 (31.08.2000)

(25) Filing Language: English

(26) Publication Language: English

(30) Priority Data:
09/434,711 5 November 1999 (05.11.1999) US

(71) Applicant: ATMEL CORPORATION [US/US]; 2325 Orchard Parkway, San Jose, CA 95131 (US).

(72) Inventors: LAM, Ken, M.; 4355 Kincaid Court, Colorado Springs, CO 80906 (US). KOVATS, Julius, A.; 368 Pilot Knob Avenue, Manitou Springs, CO 80829 (US).

(74) Agent: SCHNECK, Thomas; Law Offices of Thomas Schneck, P.O. Box 2-E, San Jose, CA 95109-0005 (US).

(81) Designated States *(national)*: CA, CN, JP, KR, NO, SG.

(84) Designated States *(regional)*: European patent (AT, BE, CH, CY, DE, DK, ES, FI, FR, GB, GR, IE, IT, LU, MC, NL, PT, SE).

Published:
- - *With international search report.*

For two-letter codes and other abbreviations, refer to the "Guidance Notes on Codes and Abbreviations" appearing at the beginning of each regular issue of the PCT Gazette.

(54) Title: METAL REDISTRIBUTION LAYER HAVING SOLDERABLE PADS AND WIRE BONDABLE PADS

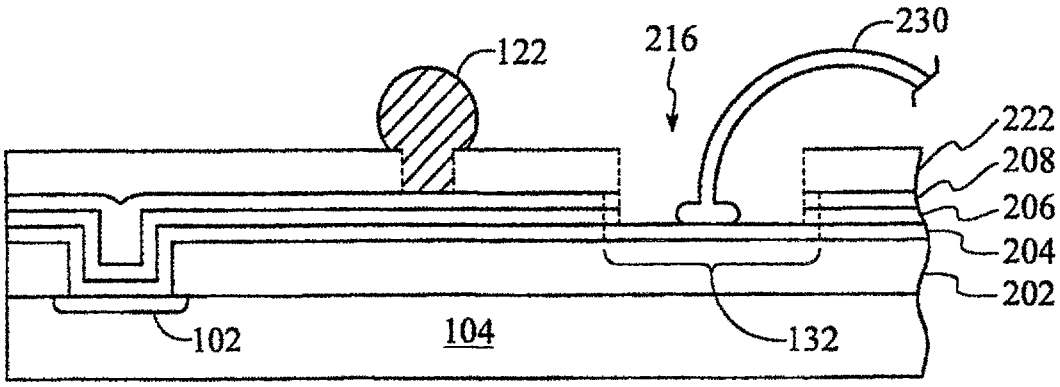

(57) Abstract: A redistribution metallization scheme combines solder bumps (122) and wire bond pads (132) in addition to existing bond pads (102) to enhance the connectivity of a semiconductor device, especially in flip-chip applications. The fabrication method includes forming the additional bond pads during the redistribution deposition step. The metals (204, 206, 208) used in the redistribution layer provide a solderable surface for solder bumping and a bondable surface for wire bonding.

WO 01/35462 A1