(12) INTERNATIONAL APPLICATION PUBLISHED UNDER THE PATENT COOPERATION TREATY (PCT)

(19) World Intellectual Property Organization
International Bureau

(43) International Publication Date
23 January 2025 (23.01.2025)

WIPO | PCT

(10) International Publication Number
WO 2025/019165 A1

(51) International Patent Classification:
H01L 21/67 (2006.01) *H01J 37/32* (2006.01)
H01L 21/687 (2006.01)

(21) International Application Number:
PCT/US2024/036925

(22) International Filing Date:
05 July 2024 (05.07.2024)

(25) Filing Language: English

(26) Publication Language: English

(30) Priority Data:
18/223,184 18 July 2023 (18.07.2023) US

(71) Applicant: **APPLIED MATERIALS, INC.** [US/US]; 3050 Bowers Avenue, Santa Clara, California 95054 (US).

(72) Inventors: **JANAKIRAMAN, Anish**; 3050 Bowers Avenue, Santa Clara, California 95054 (US). **KULKARNI, Mayur Govind**; 3050 Bowers Avenue, Santa Clara, California 95054 (US). **PADHI, Deenesh**; 3050 Bowers Avenue, Santa Clara, California 95054 (US).

(74) Agent: **SPINK, Torrey D.** et al.; 1100 Peachtree Street NE, Suite 2800, Mailstop: IP Docketing - 22, Atlanta, Georgia 30309 (US).

(81) Designated States *(unless otherwise indicated, for every kind of national protection available)*: AE, AG, AL, AM, AO, AT, AU, AZ, BA, BB, BG, BH, BN, BR, BW, BY, BZ, CA, CH, CL, CN, CO, CR, CU, CV, CZ, DE, DJ, DK, DM, DO, DZ, EC, EE, EG, ES, FI, GB, GD, GE, GH, GM, GT, HN, HR, HU, ID, IL, IN, IQ, IR, IS, IT, JM, JO, JP, KE, KG, KH, KN, KP, KR, KW, KZ, LA, LC, LK, LR, LS, LU, LY, MA, MD, MG, MK, MN, MU, MW, MX, MY, MZ, NA, NG, NI, NO, NZ, OM, PA, PE, PG, PH, PL, PT, QA, RO, RS, RU, RW, SA, SC, SD, SE, SG, SK, SL, ST, SV, SY, TH, TJ, TM, TN, TR, TT, TZ, UA, UG, US, UZ, VC, VN, WS, ZA, ZM, ZW.

(84) Designated States *(unless otherwise indicated, for every kind of regional protection available)*: ARIPO (BW, CV, GH, GM, KE, LR, LS, MW, MZ, NA, RW, SC, SD, SL, ST, SZ, TZ, UG, ZM, ZW), Eurasian (AM, AZ, BY, KG, KZ, RU, TJ, TM), European (AL, AT, BE, BG, CH, CY, CZ, DE, DK, EE, ES, FI, FR, GB, GR, HR, HU, IE, IS, IT, LT, LU, LV, MC, ME, MK, MT, NL, NO, PL, PT, RO, RS, SE, SI, SK, SM, TR), OAPI (BF, BJ, CF, CG, CI, CM, GA, GN, GQ, GW, KM, ML, MR, NE, SN, TD, TG).

Published:
— *with international search report (Art. 21(3))*

(54) Title: SHAPED FACEPLATE FOR EXTREME EDGE FILM UNIFORMITY

(57) Abstract: Exemplary semiconductor processing chambers may include a chamber body. The chambers may include a substrate support within the chamber body. The substrate support may define a substrate support surface. The chambers may include a faceplate supported atop the chamber body. The substrate support and a bottom surface of the faceplate may at least partially define a processing region. The bottom surface of the faceplate may define an annular protrusion that is directly above at least a portion of a radially outer 10% of the substrate support surface and an annular groove that is positioned radially outward of the annular protrusion. At least a portion of the annular groove may extend radially outward beyond the substrate support surface. The faceplate may define apertures through the faceplate. A first subset of the apertures may extend through the annular protrusion and a second subset of the apertures may extend through the annular groove.

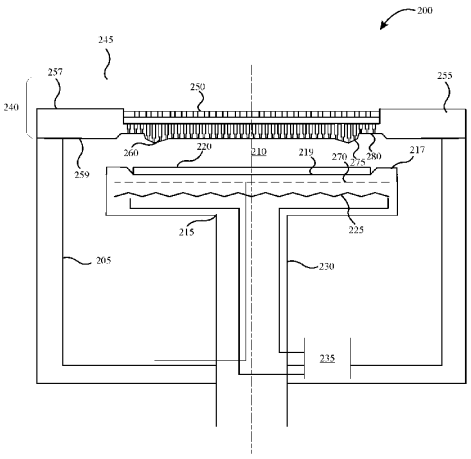

FIG. 2A

WO 2025/019165 A1