FIG. 5

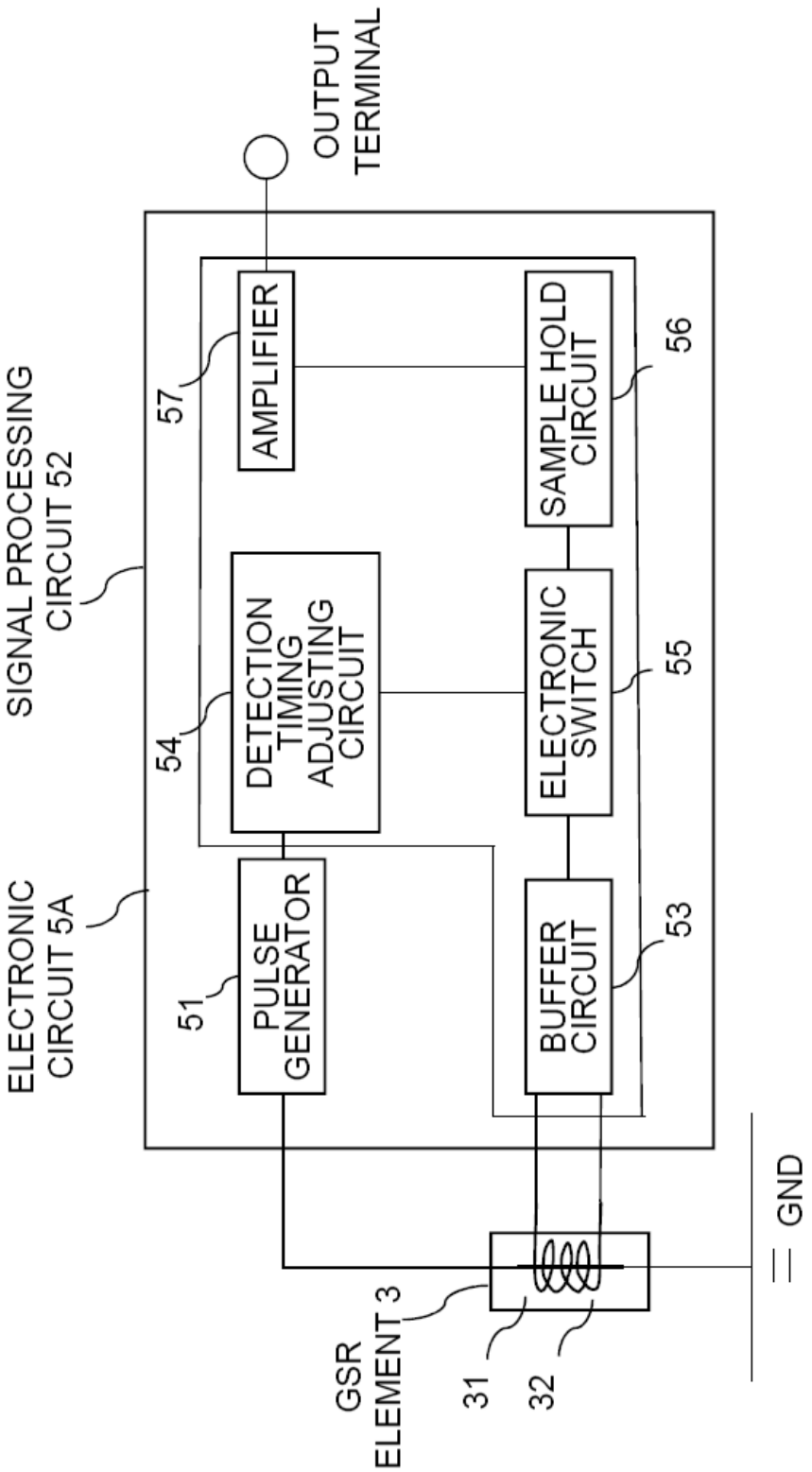
OUTPUT TERMINAL
SIGNAL PROCESSING CIRCUIT 52
ELECTRONIC CIRCUIT 5A
AMPLIFIER
57
SAMPLE HOLD CIRCUIT
56
DETECTION TIMING ADJUSTING CIRCUIT
54
ELECTRONIC SWITCH
55
PULSE GENERATOR
51
BUFFER CIRCUIT
53
GSR ELEMENT 3
31
32
GND