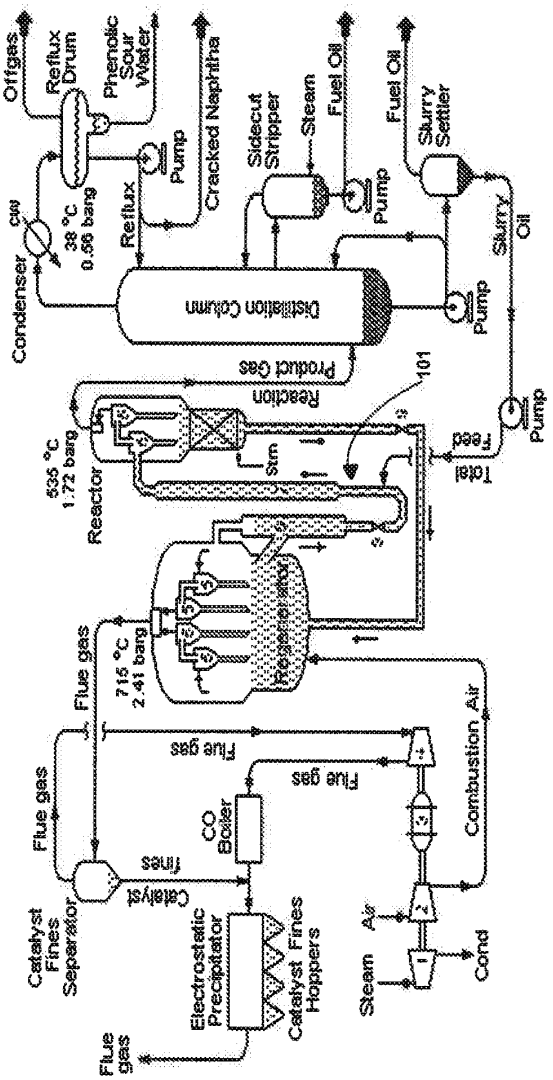
Offgas
Reflux Drum
Phenolic Sour Water
Cracked Naphtha
Pump
Reflux
Condenser
CW
38 °C
0.56 barg
Sidecut Stripper
Steam
Fuel Oil
Pump
Fuel Oil
Slurry Settler
Slurry Oil
Distillation Column
Pump
Product Gas
Reaction
101
Reactor
535 °C
1.72 barg
Stm
Total Feed
Pump
Regenerator
715 °C
2.41 barg
Flue gas
Flue gas
Flue gas
Flue gas
Combustion Air
CO Boiler
Catalyst fines
Catalyst Fines Separator
Electrostatic Precipitator
Catalyst Fines Hoppers
Flue gas
Steam
Air
Cond

Figure 1

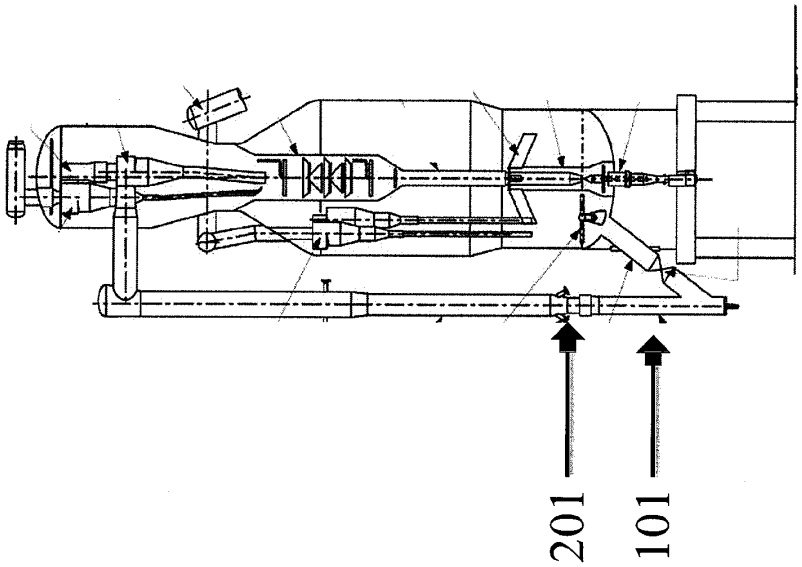

Figure 2A

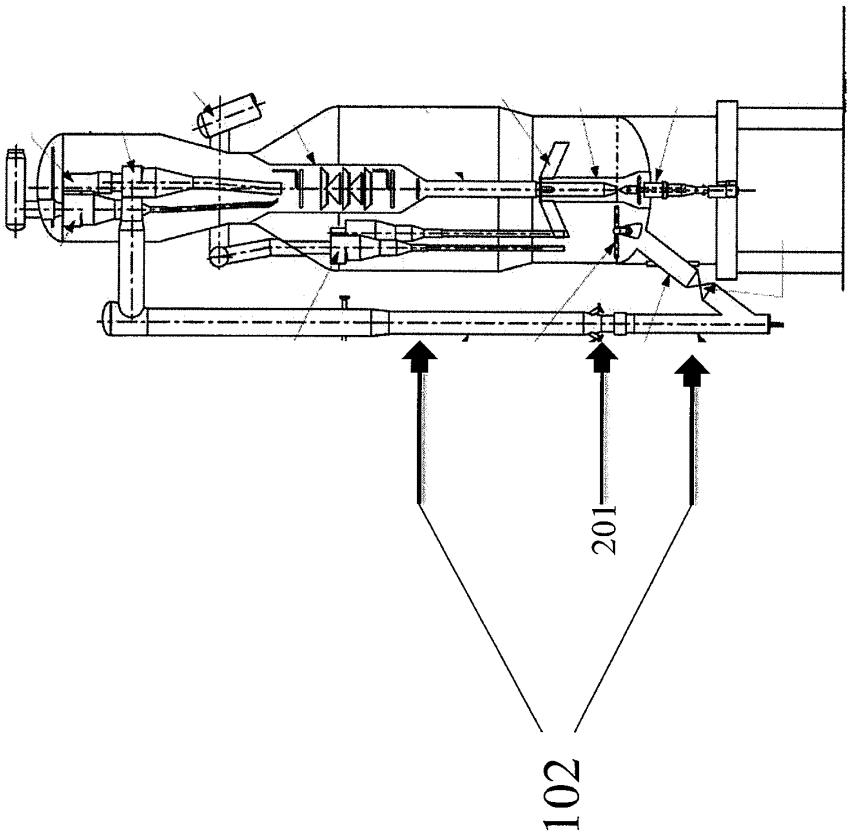

Figure 2B

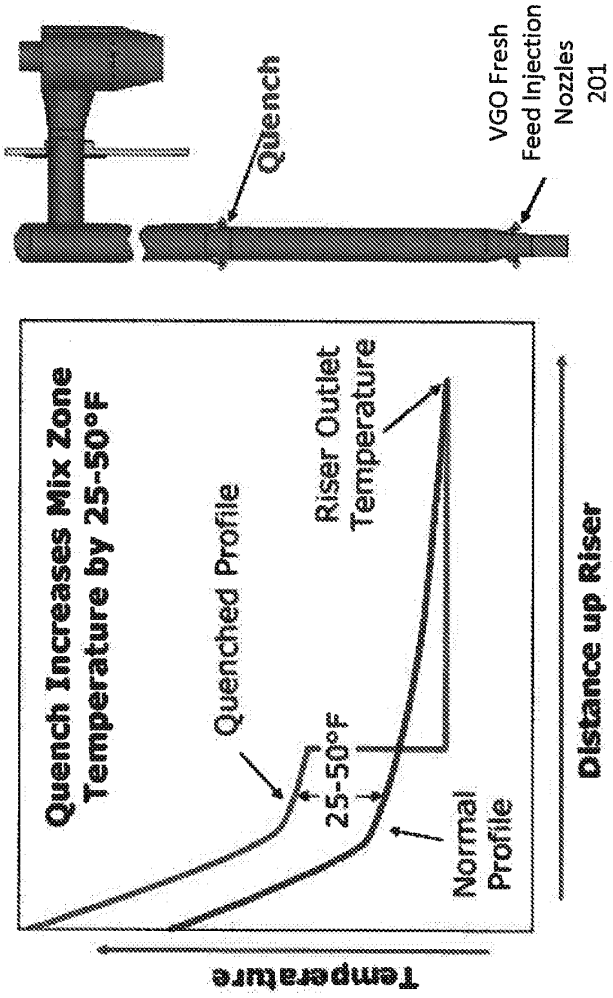
Quench
VGO Fresh Feed Injection Nozzles 201
Quench Increases Mix Zone Temperature by 25-50°F
Quenched Profile
Riser Outlet Temperature
25-50°F
Normal Profile
Temperature
Distance up Riser

Figure 3

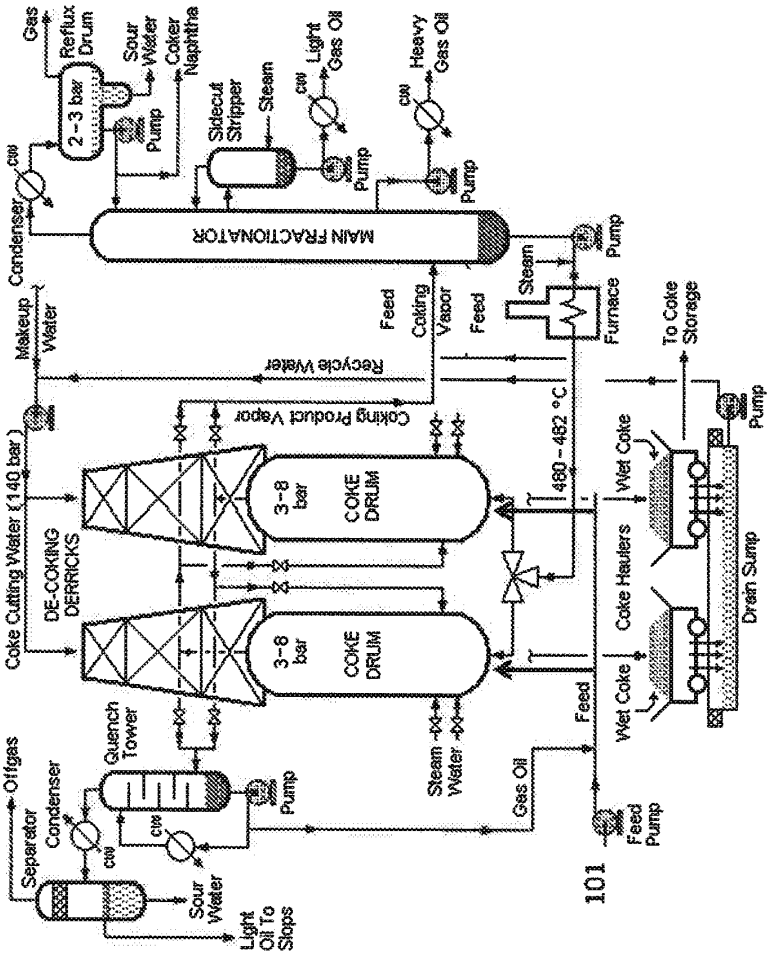
Gas
Reflux Drum
2 – 3 bar
Sour Water
Coker Naphtha
Pump
Sidecut Stripper
Steam
Light Gas Oil
Heavy Gas Oil
Condenser
MAIN FRACTIONATOR
Makeup Water
Feed
Coking Vapor
Steam
Furnace
To Coke Storage
Recycle Water
Coking Product Vapor
Coke Cutting Water (140 bar)
DE-COKING DERRICKS
3 – 8 bar
COKE DRUM
480 – 482 °C
Wet Coke
Coke Haulers
Drain Sump
Quench Tower
Offgas
Separator
Sour Water
Light Oil To Slops
Steam Water
Gas Oil
Feed Pump
101

Figure 4

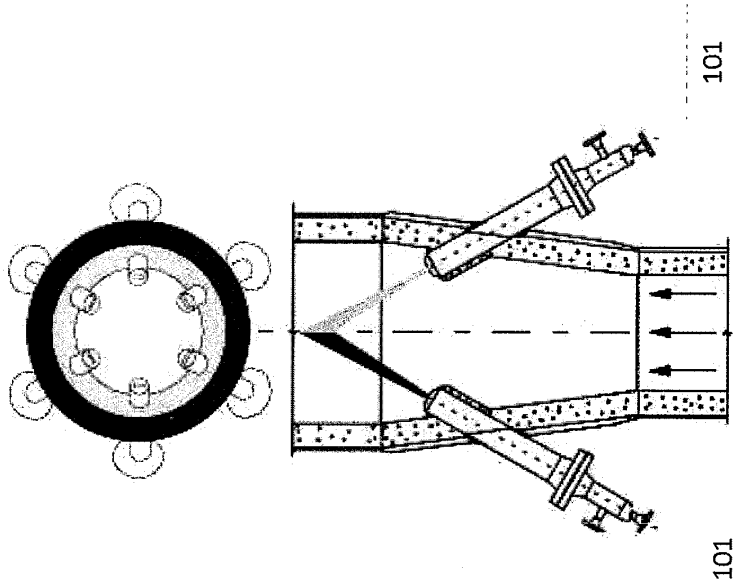

Figure 5

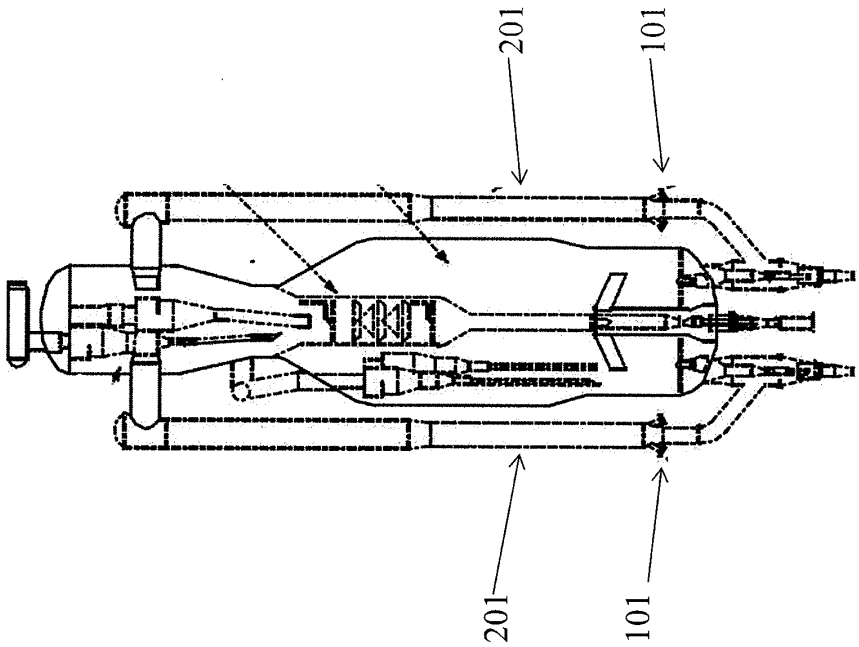

Figure 6