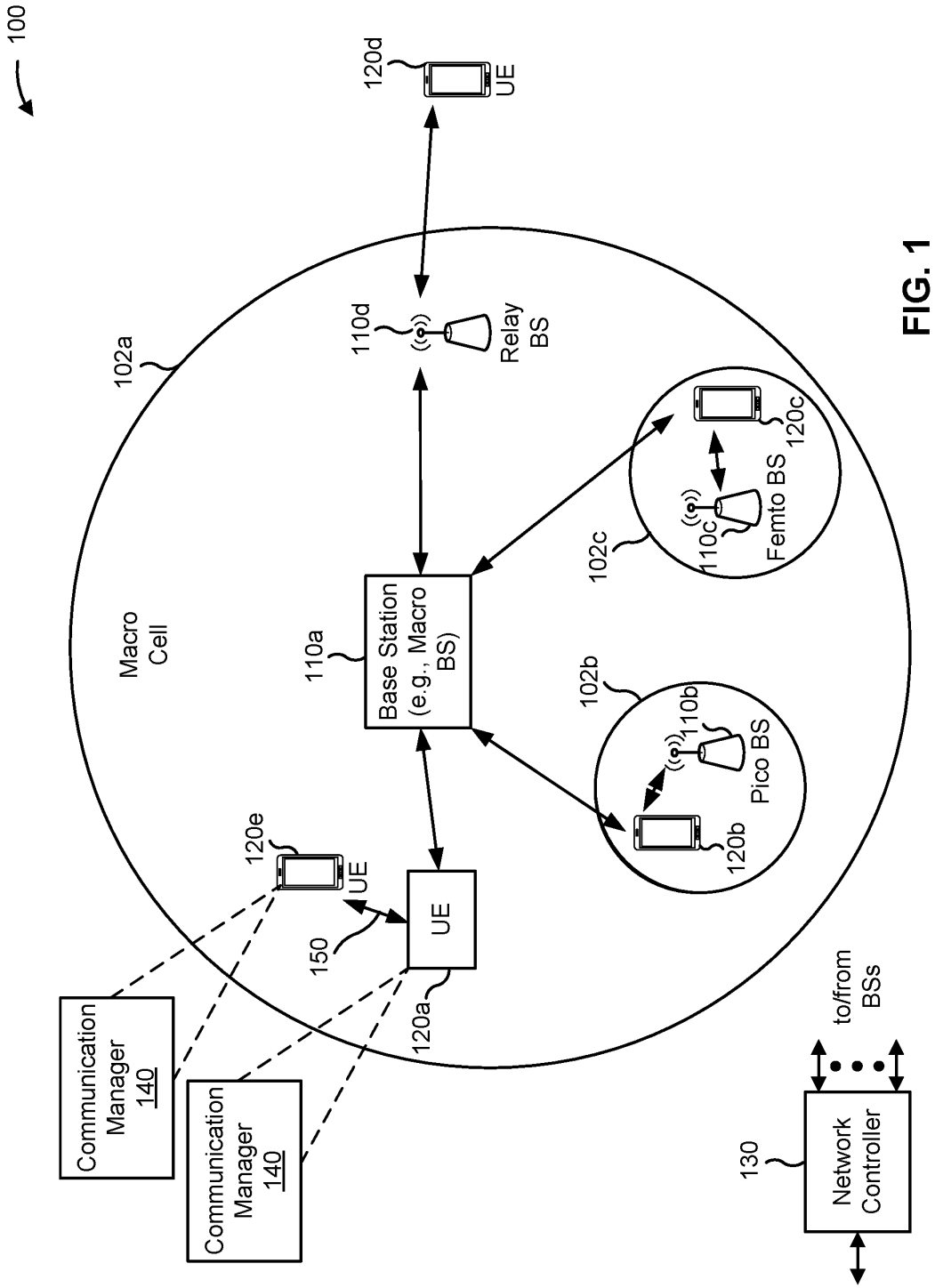
100
120d
UE
102a
110d
Relay
BS
Macro
Cell
110a
Base Station
(e.g., Macro
BS)
102c
120c
110c
Femto BS
102b
110b
Pico BS
120b
120e
UE
150
UE
120a
Communication
Manager
140
Communication
Manager
140
to/from
BSs
130
Network
Controller

FIG. 1

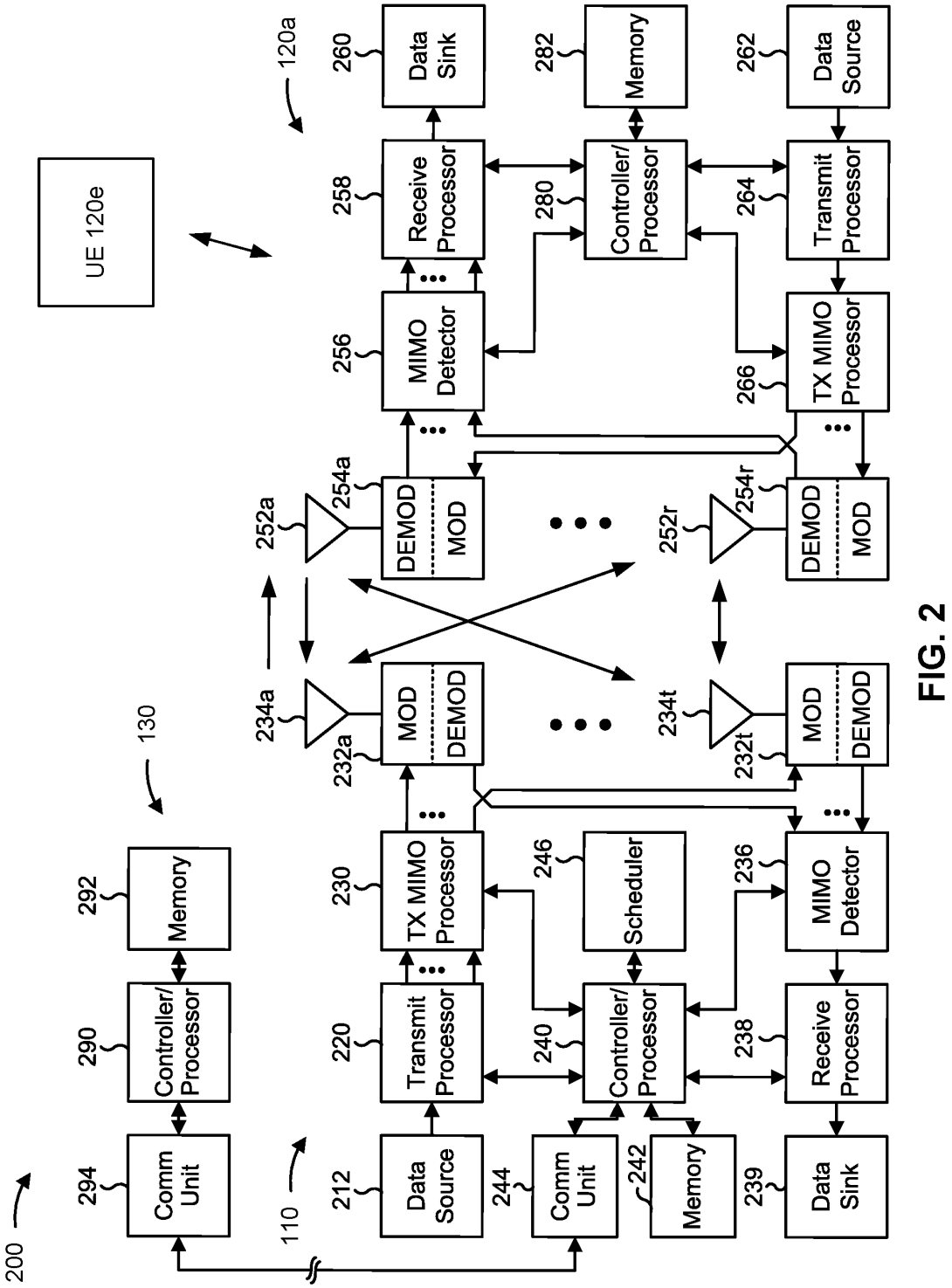
200
110
130
120a
UE 120e
294
Comm Unit
290
Controller/ Processor
292
Memory
212
Data Source
220
Transmit Processor
230
TX MIMO Processor
232a
MOD
DEMOD
234a
252a
254a
DEMOD
MOD
256
MIMO Detector
258
Receive Processor
260
Data Sink
244
Comm Unit
242
Memory
240
Controller/ Processor
246
Scheduler
239
Data Sink
238
Receive Processor
236
MIMO Detector
232t
MOD
DEMOD
234t
252r
254r
DEMOD
MOD
266
TX MIMO Processor
264
Transmit Processor
262
Data Source
280
Controller/ Processor
282
Memory

FIG. 2

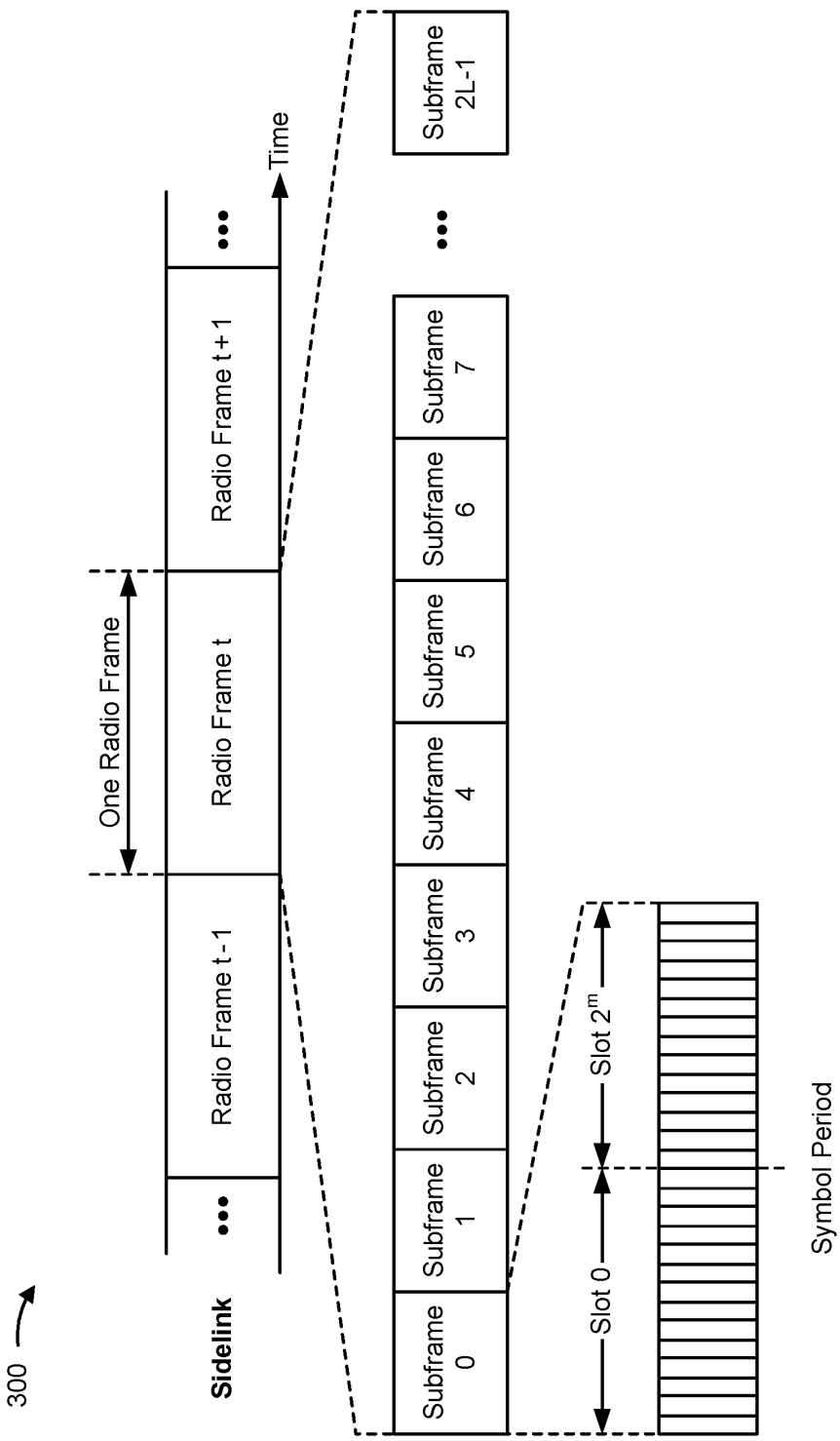
300
Sidelink
Radio Frame t - 1
Radio Frame t
Radio Frame t + 1
One Radio Frame
Time
Subframe 0
Subframe 1
Subframe 2
Subframe 3
Subframe 4
Subframe 5
Subframe 6
Subframe 7
Subframe 2L-1
Slot 0
Slot 2^m
Symbol Period

FIG. 3

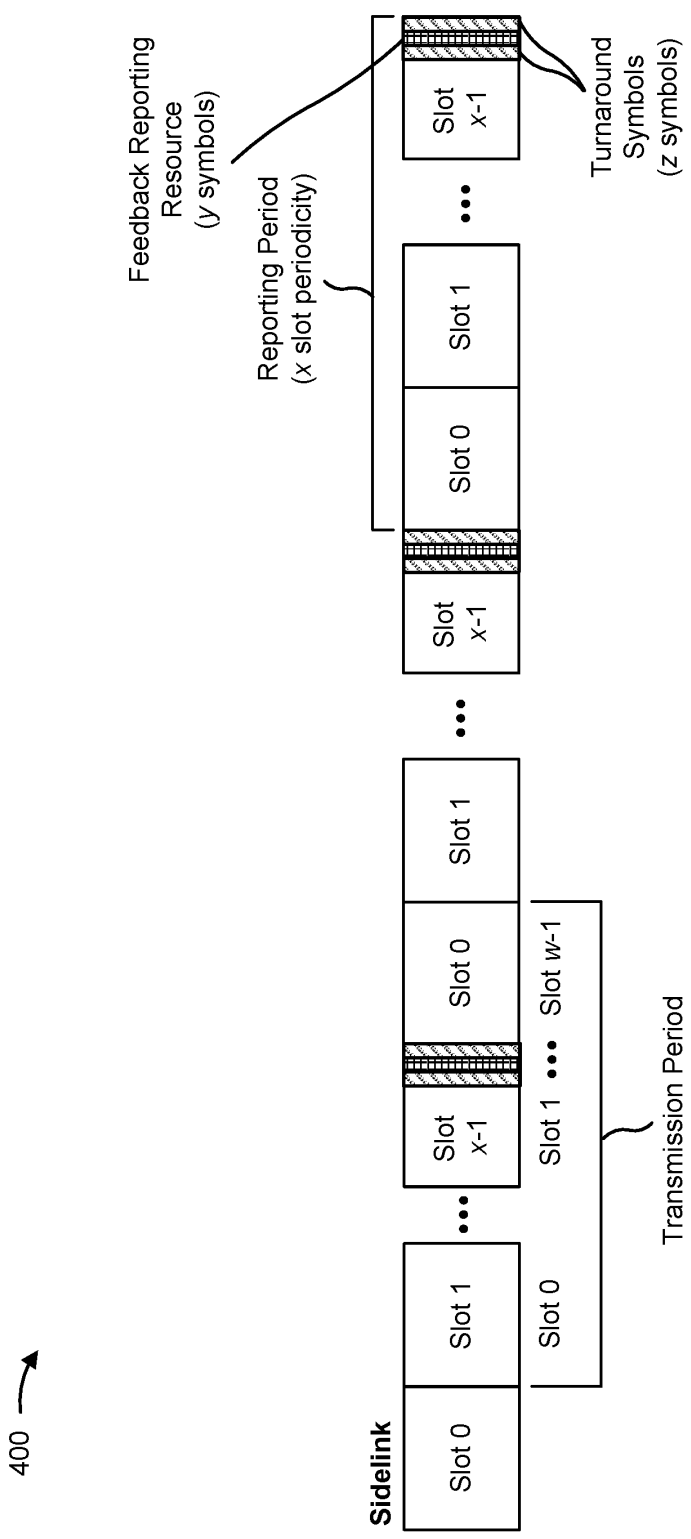
400
Sidelink
Slot 0
Slot 1
Slot x-1
Slot 0
Slot 1
Slot x-1
Slot 0
Slot 1
Slot w-1
Transmission Period
(w slots)
Reporting Period
(x slot periodicity)
Feedback Reporting
Resource
(y symbols)
Turnaround
Symbols
(z symbols)

FIG. 4A

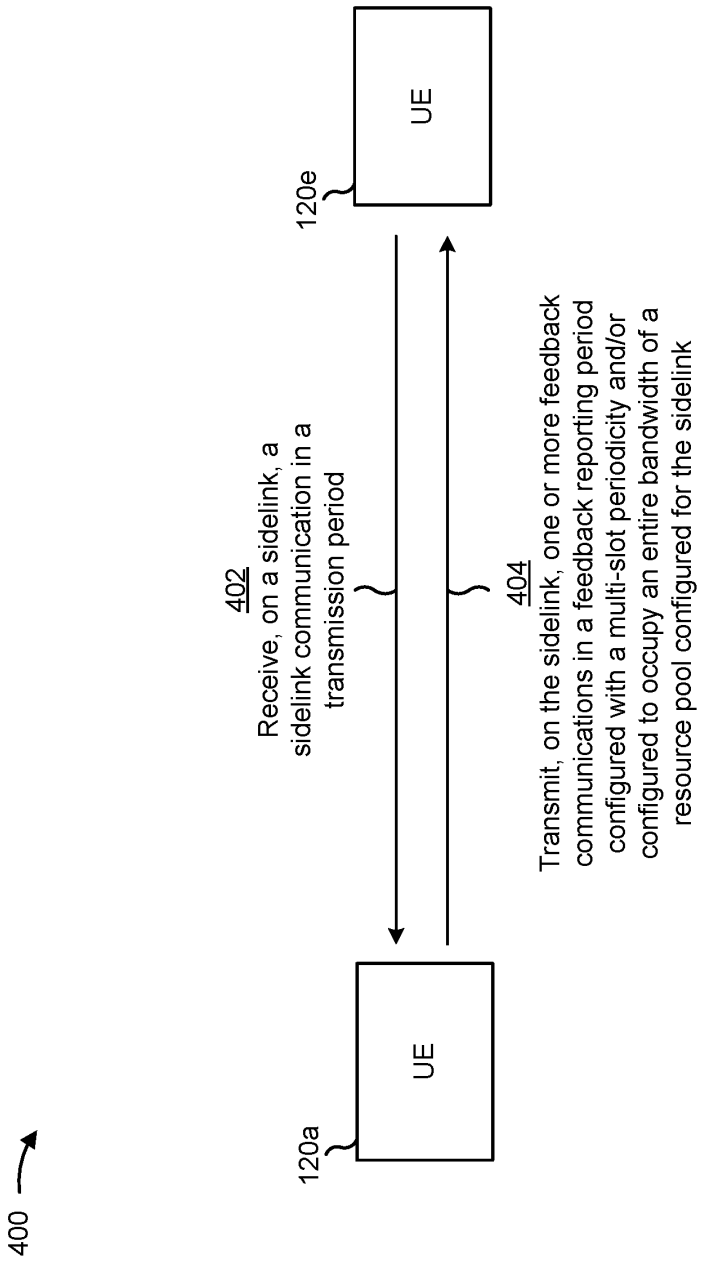
400
120a
UE
120e
UE
402
Receive, on a sidelink, a sidelink communication in a transmission period
404
Transmit, on the sidelink, one or more feedback communications in a feedback reporting period configured with a multi-slot periodicity and/or configured to occupy an entire bandwidth of a resource pool configured for the sidelink

FIG. 4B

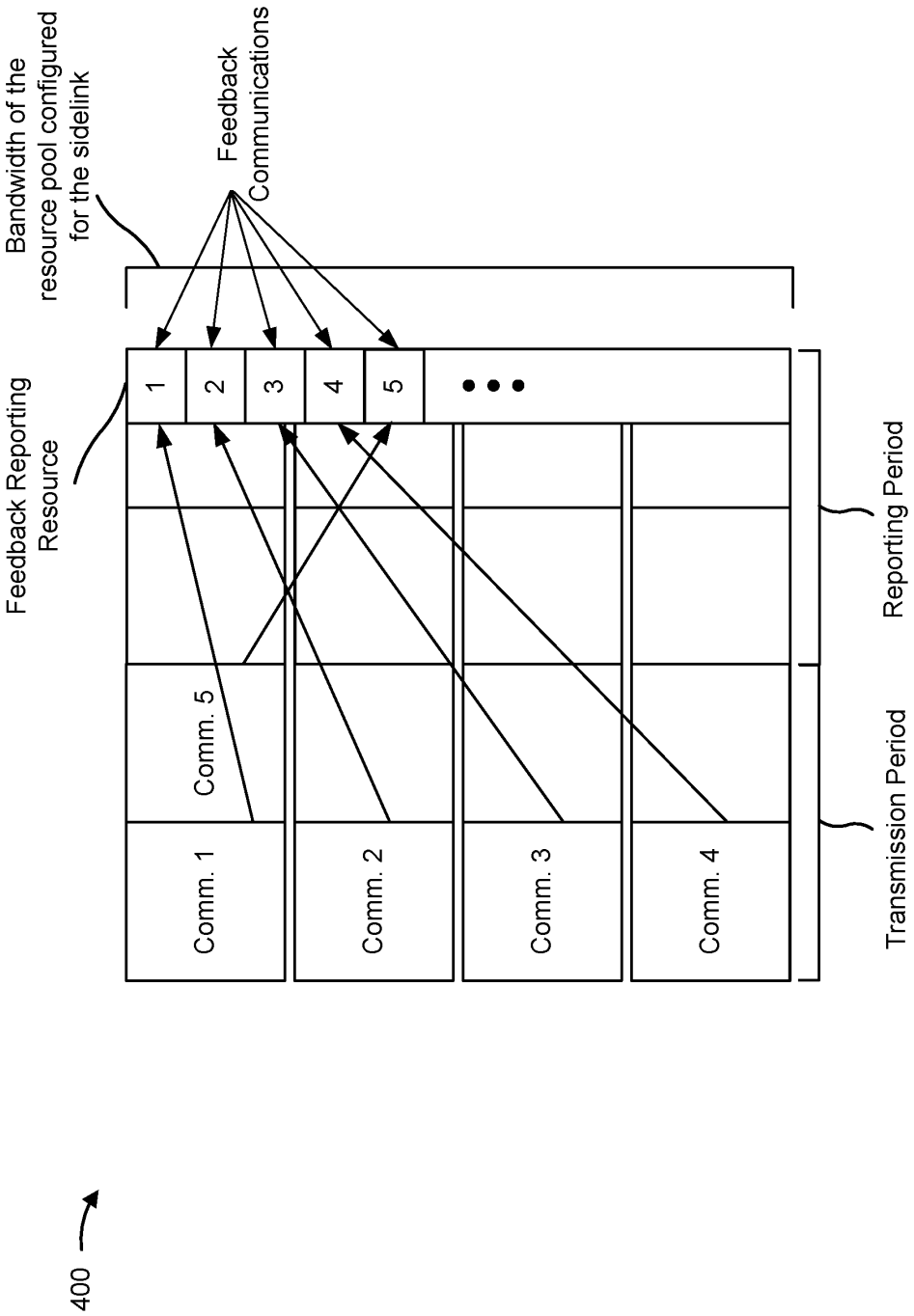
400
Bandwidth of the resource pool configured for the sidelink
Feedback Communications
Feedback Reporting Resource
1
2
3
4
5
Comm. 1
Comm. 5
Comm. 2
Comm. 3
Comm. 4
Reporting Period
Transmission Period

FIG. 4C

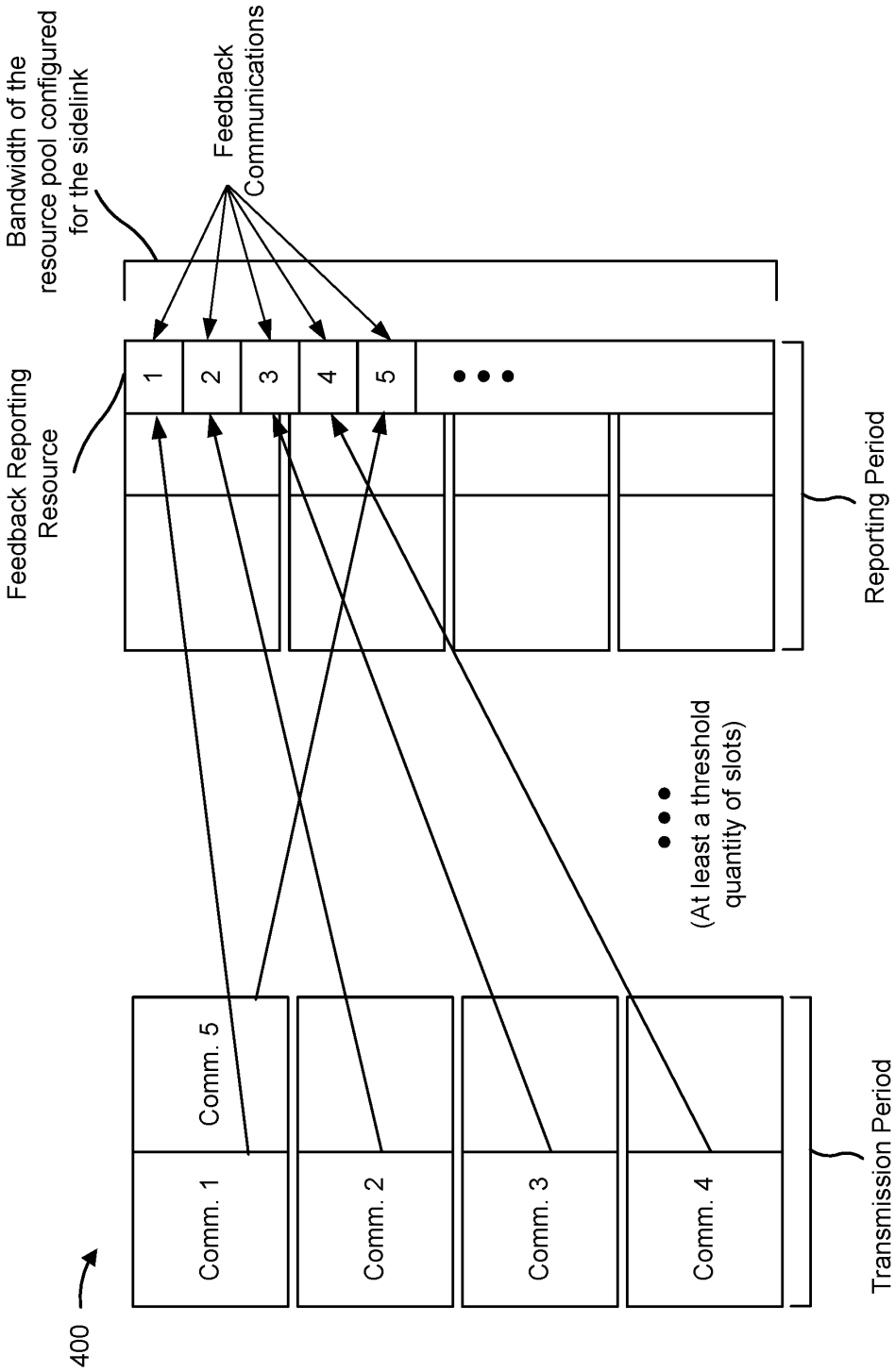
400
Comm. 1
Comm. 5
Comm. 2
Comm. 3
Comm. 4
Transmission Period
(At least a threshold quantity of slots)
Feedback Reporting Resource
1
2
3
4
5
Reporting Period
Bandwidth of the resource pool configured for the sidelink
Feedback Communications

FIG. 4D

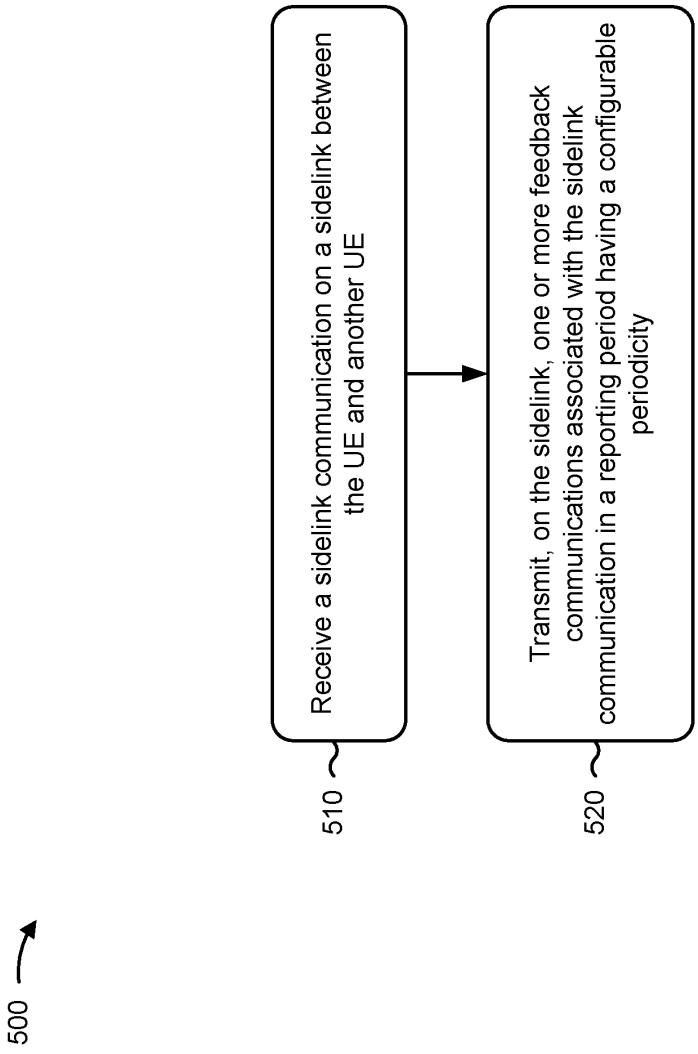
500
Receive a sidelink communication on a sidelink between the UE and another UE
510
Transmit, on the sidelink, one or more feedback communications associated with the sidelink communication in a reporting period having a configurable periodicity
520

FIG. 5

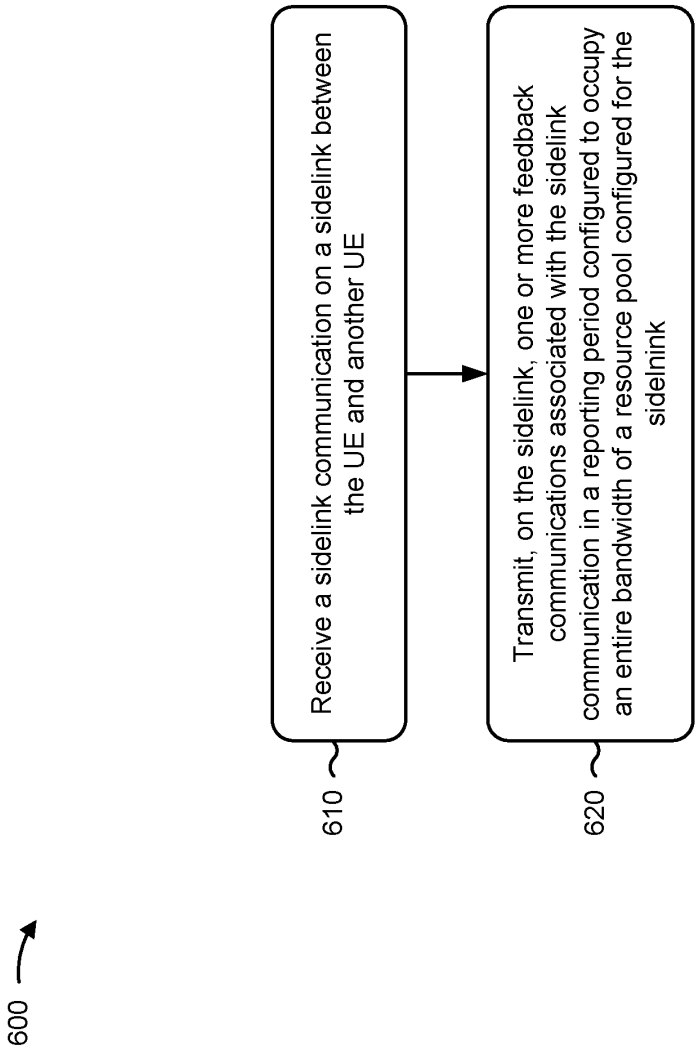
600
Receive a sidelink communication on a sidelink between the UE and another UE
610
Transmit, on the sidelink, one or more feedback communications associated with the sidelink communication in a reporting period configured to occupy an entire bandwidth of a resource pool configured for the sidelink
620

FIG. 6

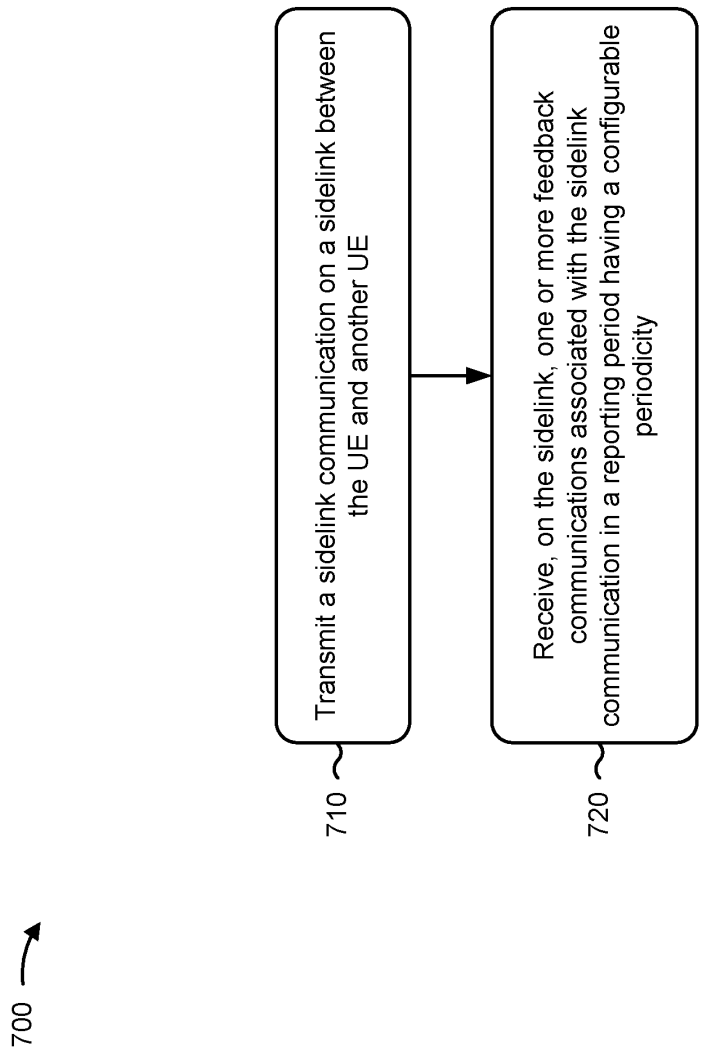
700
Transmit a sidelink communication on a sidelink between the UE and another UE
710
Receive, on the sidelink, one or more feedback communications associated with the sidelink communication in a reporting period having a configurable periodicity
720

FIG. 7

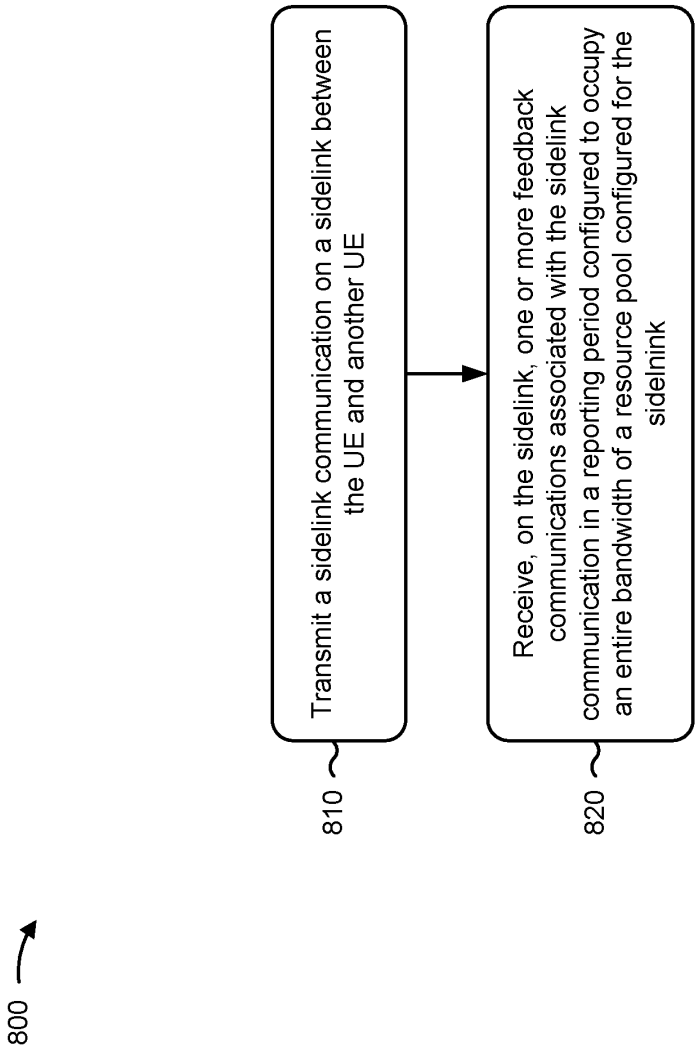
800
Transmit a sidelink communication on a sidelink between the UE and another UE
810
Receive, on the sidelink, one or more feedback communications associated with the sidelink communication in a reporting period configured to occupy an entire bandwidth of a resource pool configured for the sidelink
820

FIG. 8