Drawings

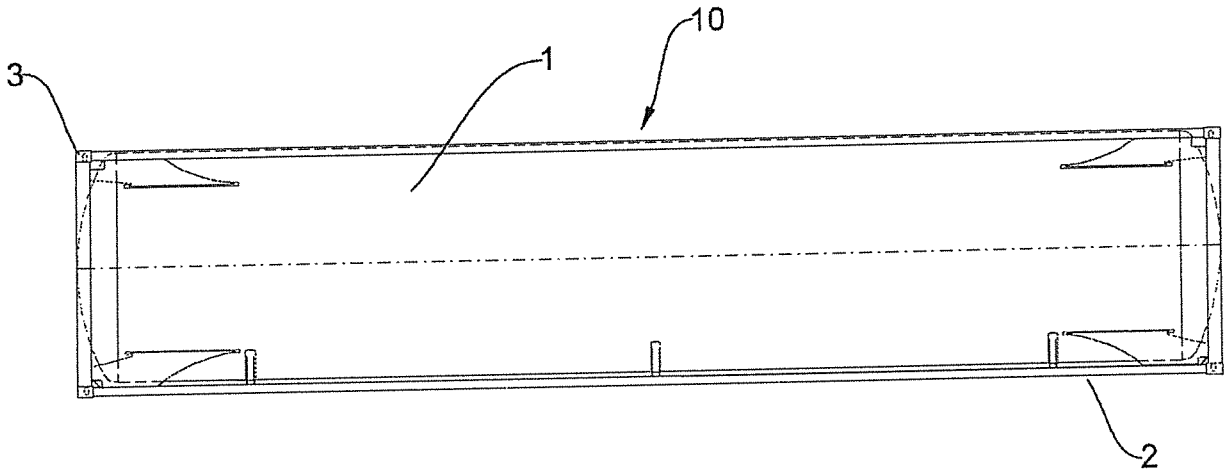

Figure 1

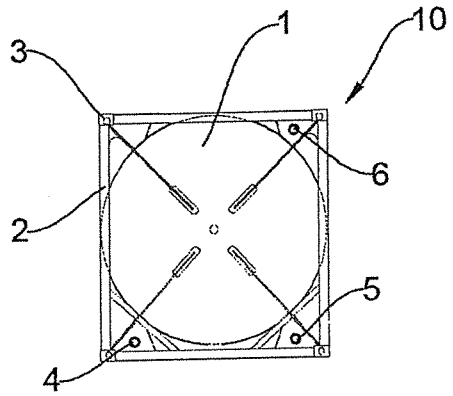

Figure 2

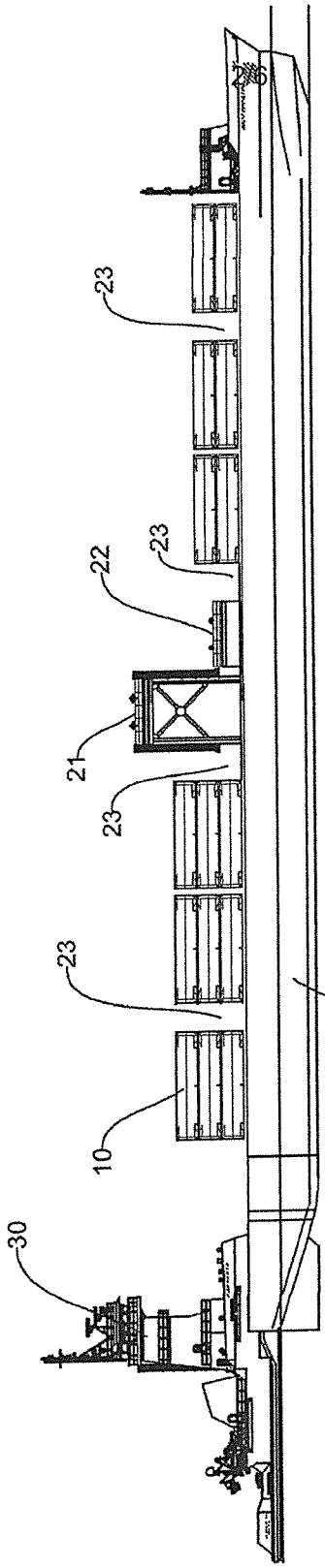

Figure 3

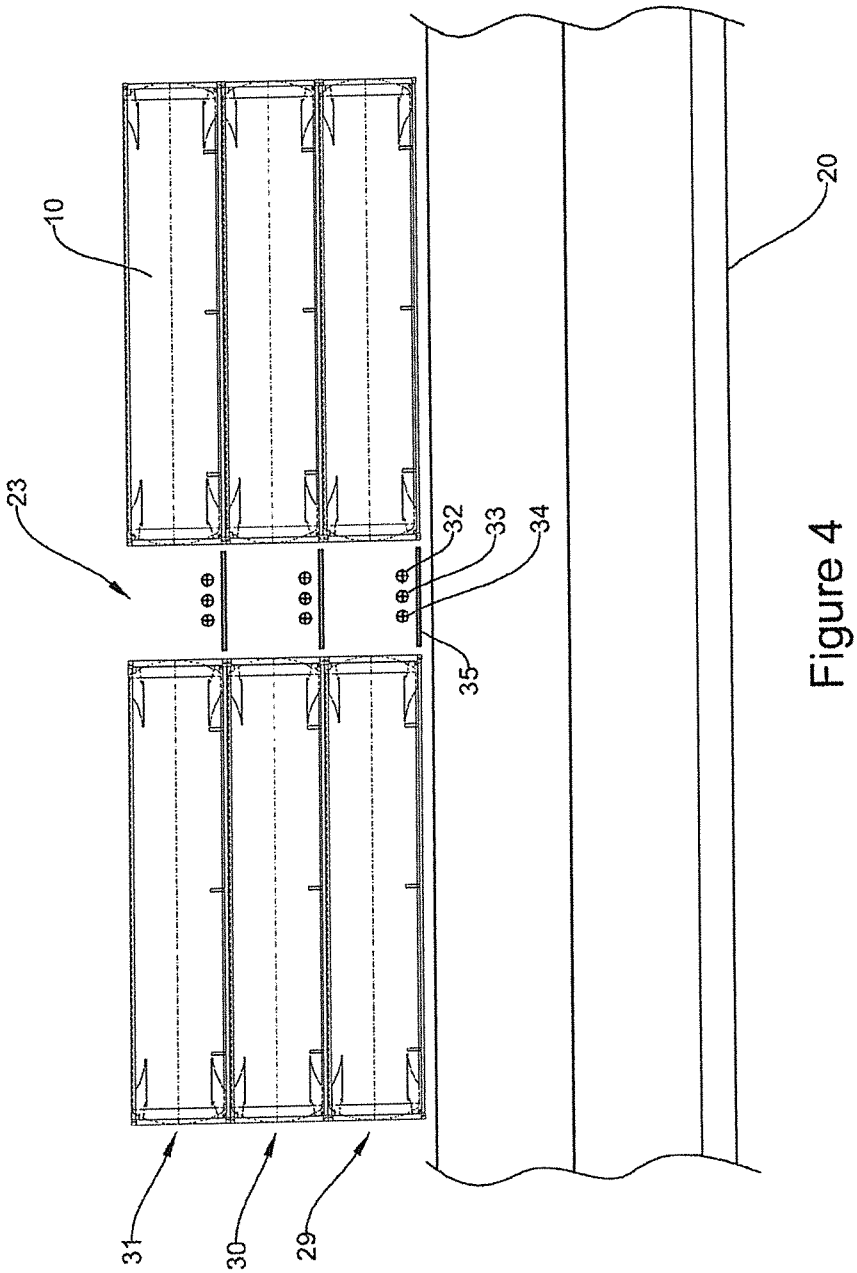

Figure 4

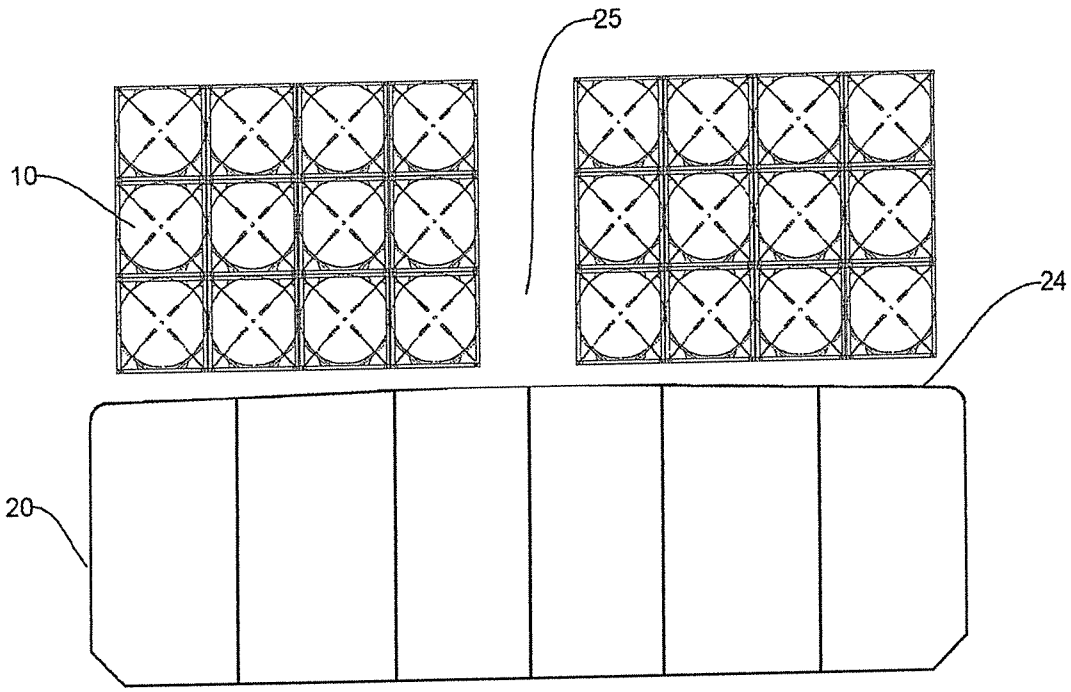

Figure 5

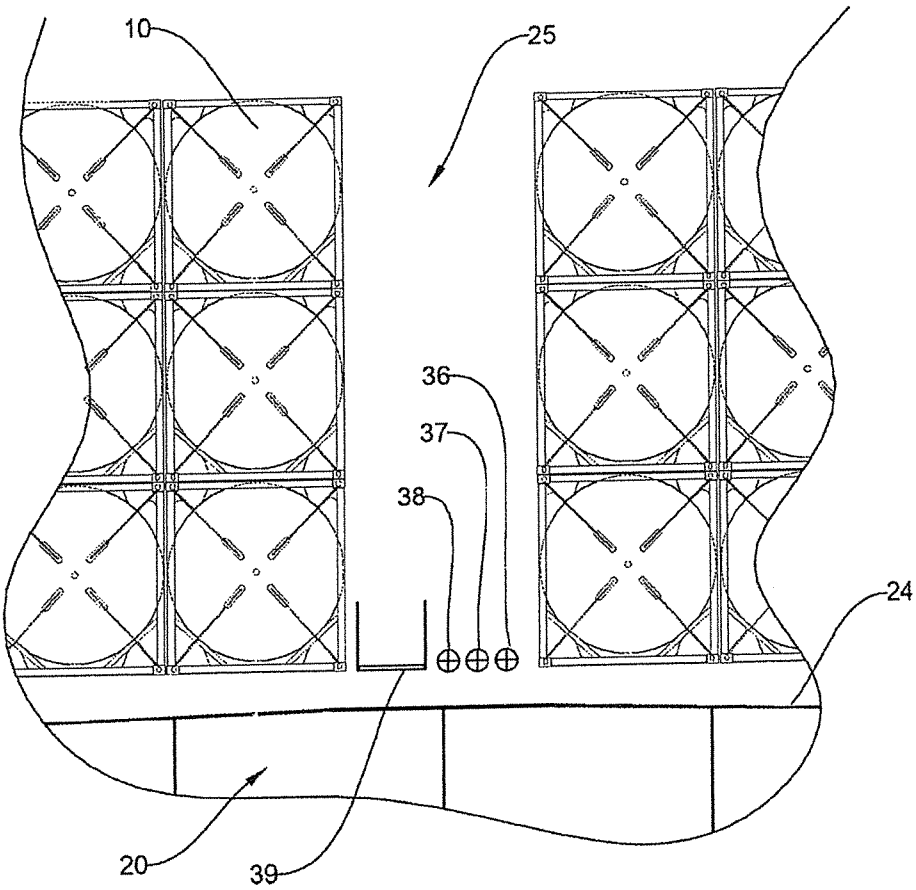

Figure 6

Drawings

6/6

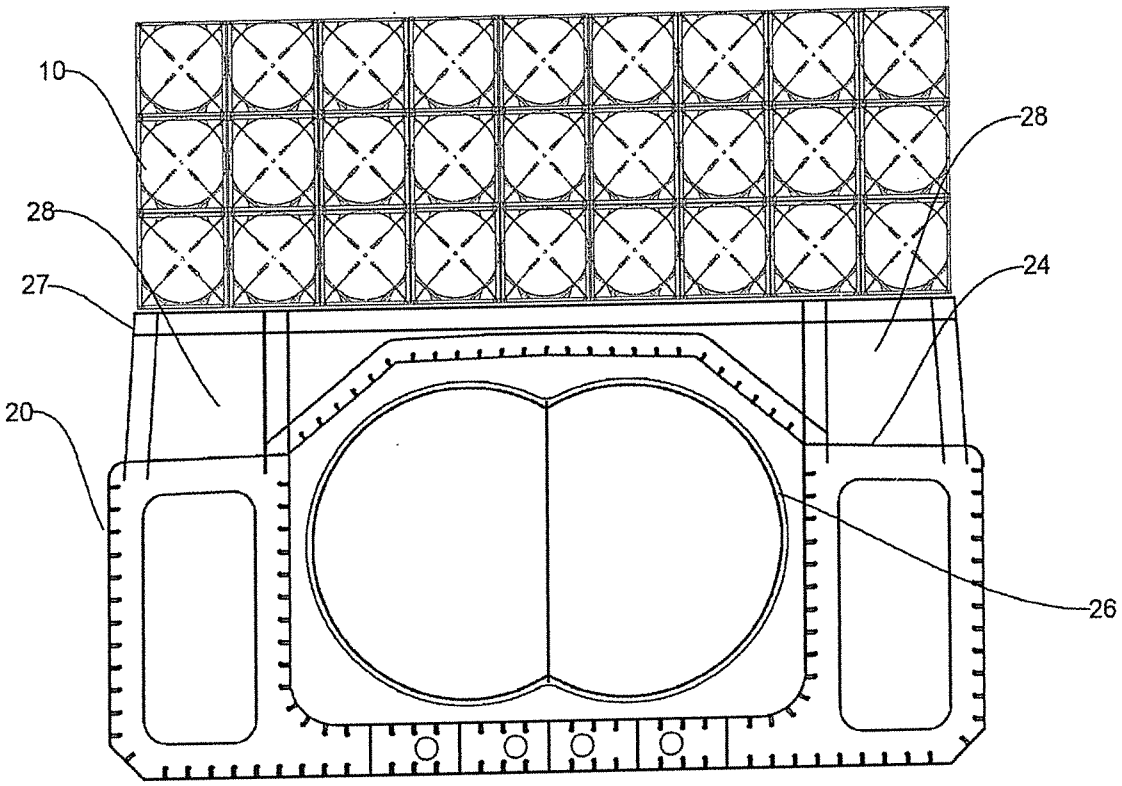

Figure 7