Claims

1. A composition comprising a heat transfer portion and a lubricating portion, wherein the lubricating portion comprises one or more compound according to formula (Ia) or formula (Ib);

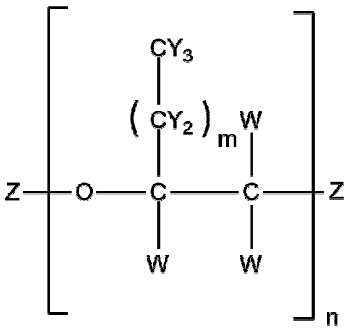

Formula (Ia)

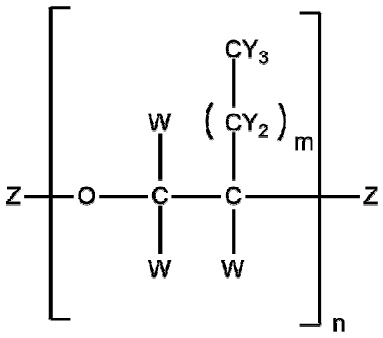

Formula (Ib)

wherein

each W is independently selected from the group consisting of H, F, Cl, Br, I and $(CY_2)_mCY_3$;

each Y is independently selected from the group consisting of F, Cl, Br and I;

each Z is independently selected from the group consisting of H, OH, $(CW_2)_pCW_3$, CY_3, OCW_3, $O(CW_2)_pCW_3$, $OCW((CY_2)_mCY_3)CWCW_2$, $(CW_2)_pOH$, polyalkylene glycol and polyolester;

n is an integer from 2 to 49;

m is an integer from 0 to 3;

p is an integer from 0 to 9;

the weight average molecular weight (M_W) is ≤5500;

the polydispersity index is ≤1.45; and

wherein the heat transfer portion comprises a (hydro)fluoroolefin (HFO).

2. A composition according to claim 1 wherein

each W is independently selected from the group consisting of H, F, Cl, Br and I;

each Y is independently selected from the group consisting of F, Cl, Br and I;

each Z is independently selected from the group consisting of H, OH, $(CW_2)_pCW_3$, CY_3, OCW_3, $O(CW_2)_pCW_3$, $OCW((CY_2)_mCY_3)CWCW_2$, polyalkylene glycol and polyolester;

n is an integer from 2 to 49;

m is an integer from 0 to 3;

p is an integer from 0 to 9;

the weight average molecular weight (M_W) is ≤5500; and

the polydispersity index is ≤1.45.

3. A composition according to claim 1 or 2 wherein the M_W is ≤4000, preferably ≤3000, even more preferably ≤2500.

4. A composition according to any one of the preceding claims wherein the polydispersity index is 1.40, preferably 1.35, more preferably 1.30, even more preferably 1.25.

5. A composition according to any one of the preceding claims, wherein Y is F or Cl, and preferably F; and/or wherein W is H, F or Cl, and preferably H; or

wherein one W group is $(CY_2)_mCY_3$, two W groups are H, Y is F and m is 0; or .

wherein one or two W groups are F, one or two W groups are H, Y is F and m is 0; or . wherein one W group is F, two W groups are H, Y is F and m is 0.

6. A composition according to any one of the preceding claims, wherein Z comprises a polyalkylene glycol; optionally wherein the polyalkylene glycol is selected from the group consisting of poly(ethylene oxide) and poly(propylene oxide), and mixtures thereof; and / or wherein at least one of the Z derivatives are not H or OH; and / or wherein at least one of the Z derivatives comprises a fluorinated-PAG (F-PAG), preferably wherein the F-PAG is selected from the group consisting of F_3C- end capped PAGs and hydroxyl end capped PAGs.

7. A composition according to any one of the proceeding claims wherein n is an integer from 2 to 25; and/or wherein m is 0; and/or wherein p is 1 to 6, and preferably 2 to 6, for example 3 to 5.

8. A composition according to any one of the preceding claims having a viscosity at 40 °C of from 5 to 250 cP; optionally wherein the viscosity is from 15 to 150 cP.

9. A composition according to any one of the preceding claims comprising at least two different compounds of formula (Ia) and/or (Ib).

10. A composition according to any one of the preceding claims, wherein the weight percentage of the compound or compounds of formula (Ia) and/or (Ib) in the composition is 1 to 30%, preferably 1 to 10%, more preferably 1 to 5%.

11. A composition according to any one of the preceding claims, wherein the heat transfer portion comprises R-32, R-152a, CF_3I, R-1234ze, R-1234yf, R-1132a, R-1123, R-744, R-290 and/or R-600a.

12. A composition according to any one of the preceding claims, further comprising a stabiliser; optionally wherein the stabiliser is selected from diene-based compounds, phosphates, phenol compounds and epoxides, and mixtures thereof.

13. A composition according to any one of the preceding claims, which comprises a single liquid phase across the entire temperature range between -30°C and 70°C.

14. A method for making the composition according to any one of the preceding claims, wherein the compound of formula (Ia) and/or formula (Ib), are made by a method comprising the polymerisation of an epoxide using an initiator formed from a base and an alcohol.

15. A method according to claim 14 wherein the base is a group I or group II metal hydroxide, preferably sodium or potassium hydroxide, more preferably potassium hydroxide, and wherein the alcohol is a primary alcohol, preferably ethylene glycol or trifluoroethanol.

16. A method according to one of claims 14 or 15, comprising the polymerisation of an epoxide in the absence of a solvent.

17. A method according to any one of claims 13 to 16 wherein the reaction is carried out at a temperature of from 0 to 130 °C, preferably from 40 to 100 °C, more preferably from 50 to 90 °C and / or

wherein the reaction is carried out at a pressure of from 100 to 1000.3 kPa, preferably 101 kPa.

18. A method according to any one of claims 14 to 17 wherein the polymerisation is of an epoxide of any one of 3,3,3-trifluoropropene (1243zf), 2,3,3,3-tetrafluropropene (1234yf), 1,3,3,3-tetrafluoropropene (1234ze),1,1,1,4,4,4-hexafluoro-2-butene (1336mzz) and hexafluoroisobutylene (HFIB), preferably the epoxide of 1243zf (1,1,1-trifluoro-2,3-epoxypropane).

19. Use of a composition, as defined in any one of claims 1 to 13, in a heat transfer device, preferably wherein the heat transfer device is a refrigeration device.

20. A compound according to formula (Ia) or formula (Ib);

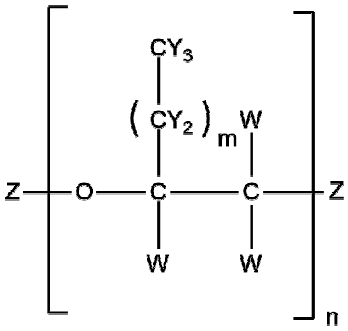

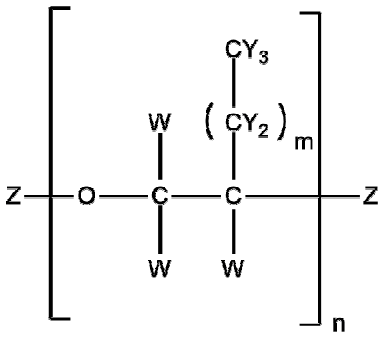

Formula (Ia) *Formula (Ib)*

wherein each W is independently selected from the group consisting of H, F, Cl, Br, I and $(CY_2)_mCY_3$; provided that at least one W in the compound according to formula (Ia) is $(CY_2)_mCY_3$;

each Y is independently selected from the group consisting of F, Cl, Br and I;

each Z is independently selected from the group consisting of H, OH, $(CW_2)_pCW_3$, CY_3, OCW_3, $O(CW_2)_pCW_3$, $OCW((CY_2)_mCY_3)CWCW_2$, $(CW_2)_pOH$, polyalkylene glycol and polyolester;

n is an integer from 2 to 49;

m is an integer from 0 to 3;

p is an integer from 0 to 9;

the weight average molecular weight (M_W) is ≤5500; and

the polydispersity index is ≤1.45.

°°