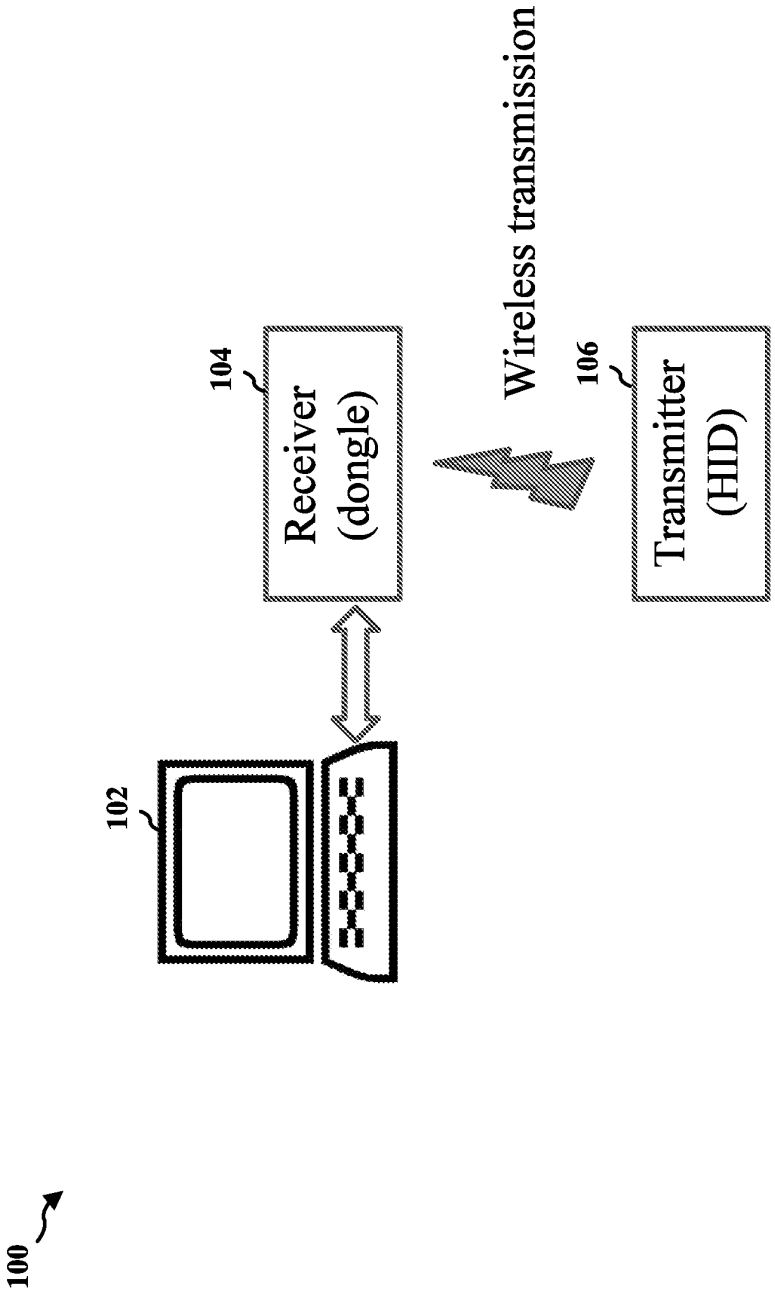
100
102
104
Receiver
(dongle)
Wireless transmission
106
Transmitter
(HID)

FIG. 1

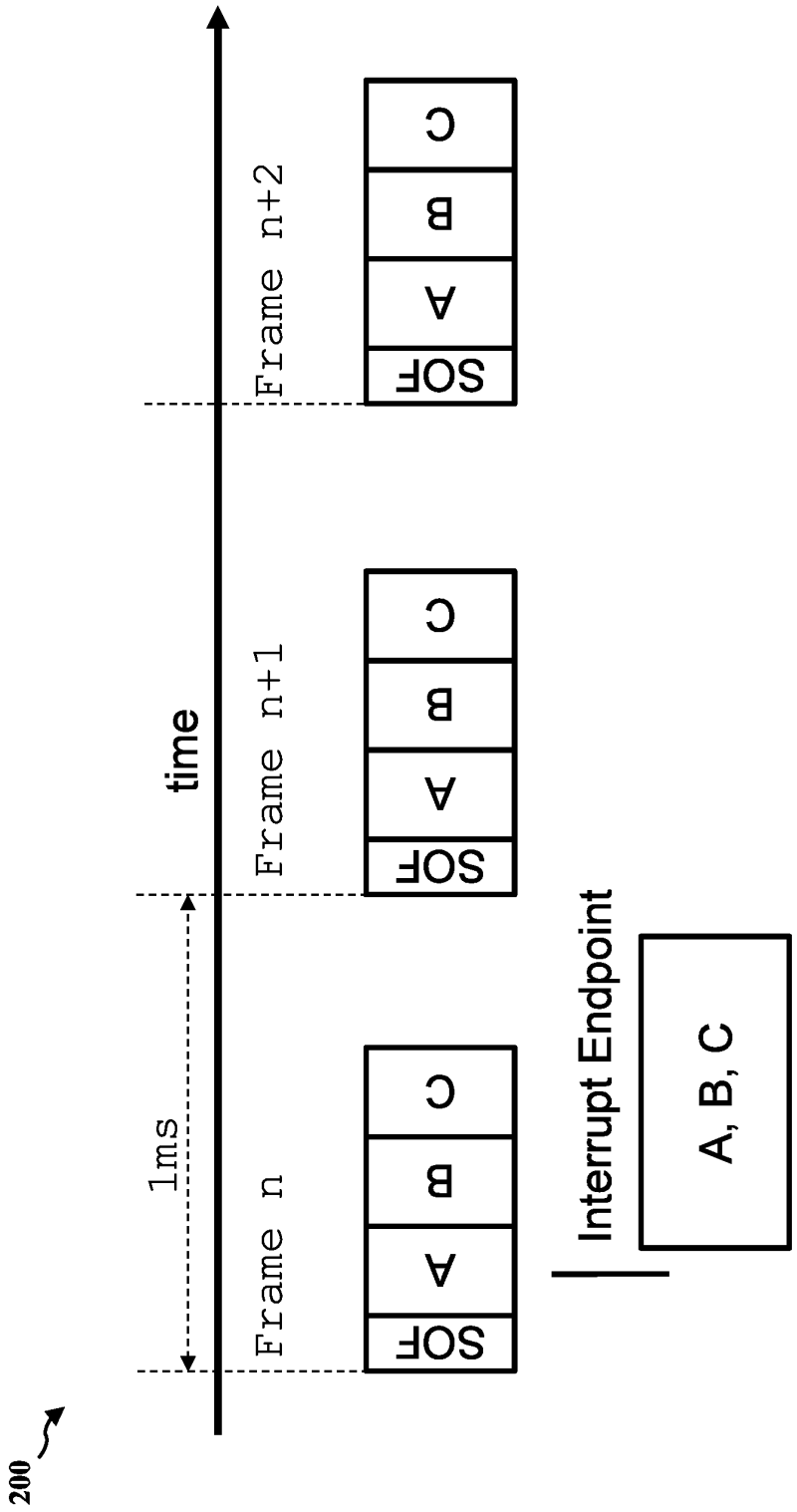
200
time
1ms
Frame n
Frame n+1
Frame n+2
SOF
A
B
C
Interrupt Endpoint
A, B, C

FIG. 2

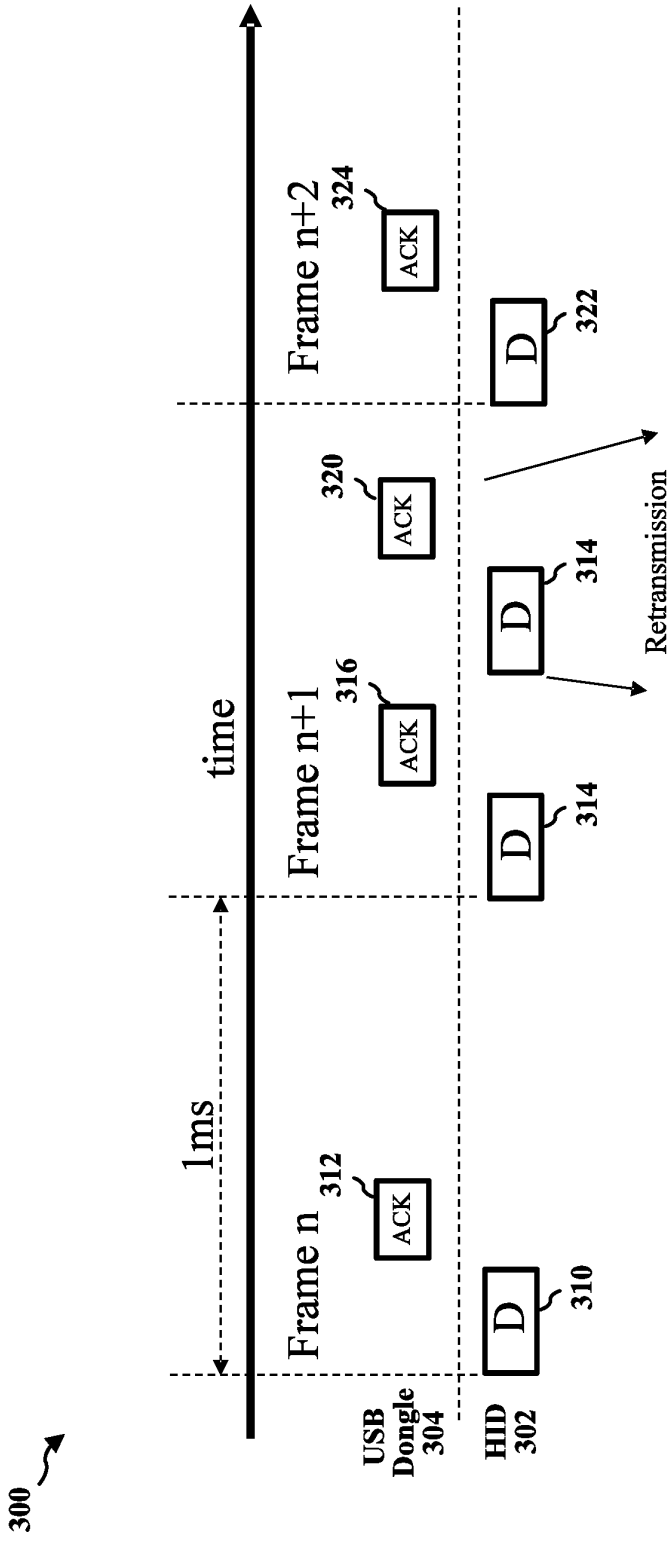
300
time
1ms
Frame n
312
ACK
Frame n+1
316
ACK
320
ACK
Frame n+2
324
ACK
USB Dongle 304
HID 302
D
310
D
314
D
314
D
322
Retransmission
D
Data packet
ACK
Acknowledgement

FIG. 3

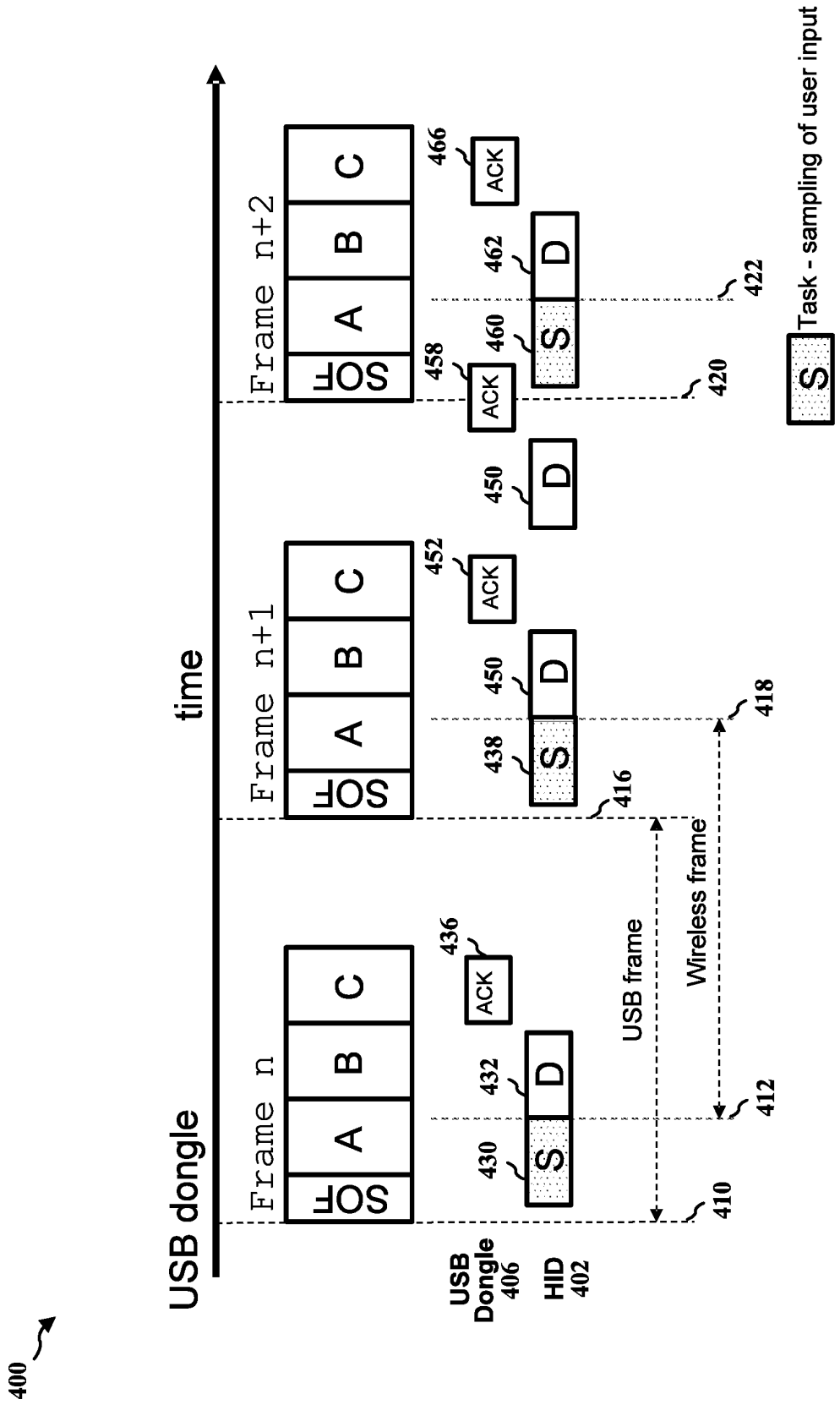
400
USB dongle
time
USB Dongle 406
HID 402
Frame n
Frame n+1
Frame n+2
HOST
A
B
C
S
D
ACK
410
412
416
418
420
422
430
432
436
438
450
452
458
460
462
466
USB frame
Wireless frame
Task - sampling of user input

FIG. 4

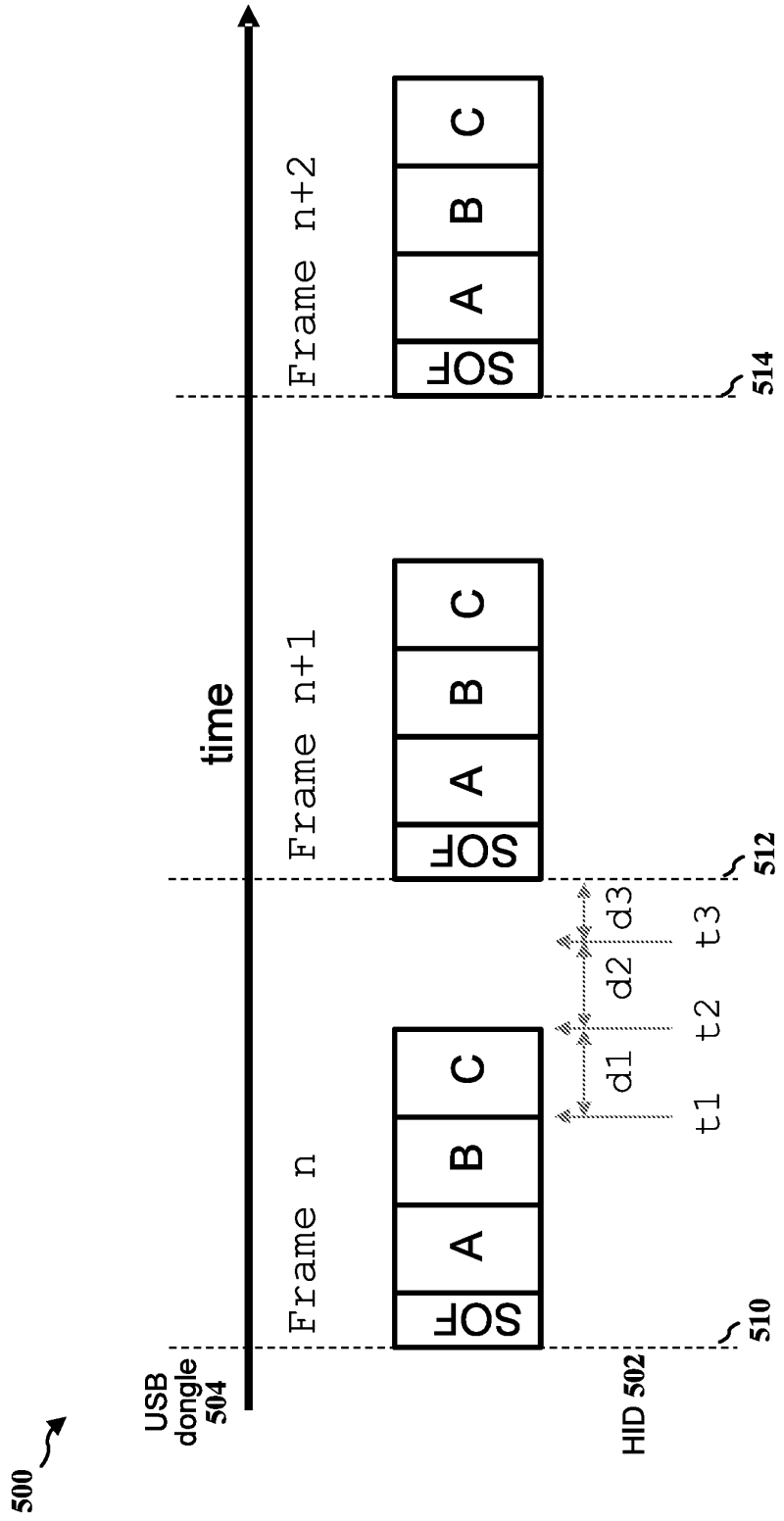
500
USB dongle 504
HID 502
time
Frame n
SOF
A
B
C
510
t1
d1
t2
d2
t3
d3
Frame n+1
512
Frame n+2
514

FIG. 5

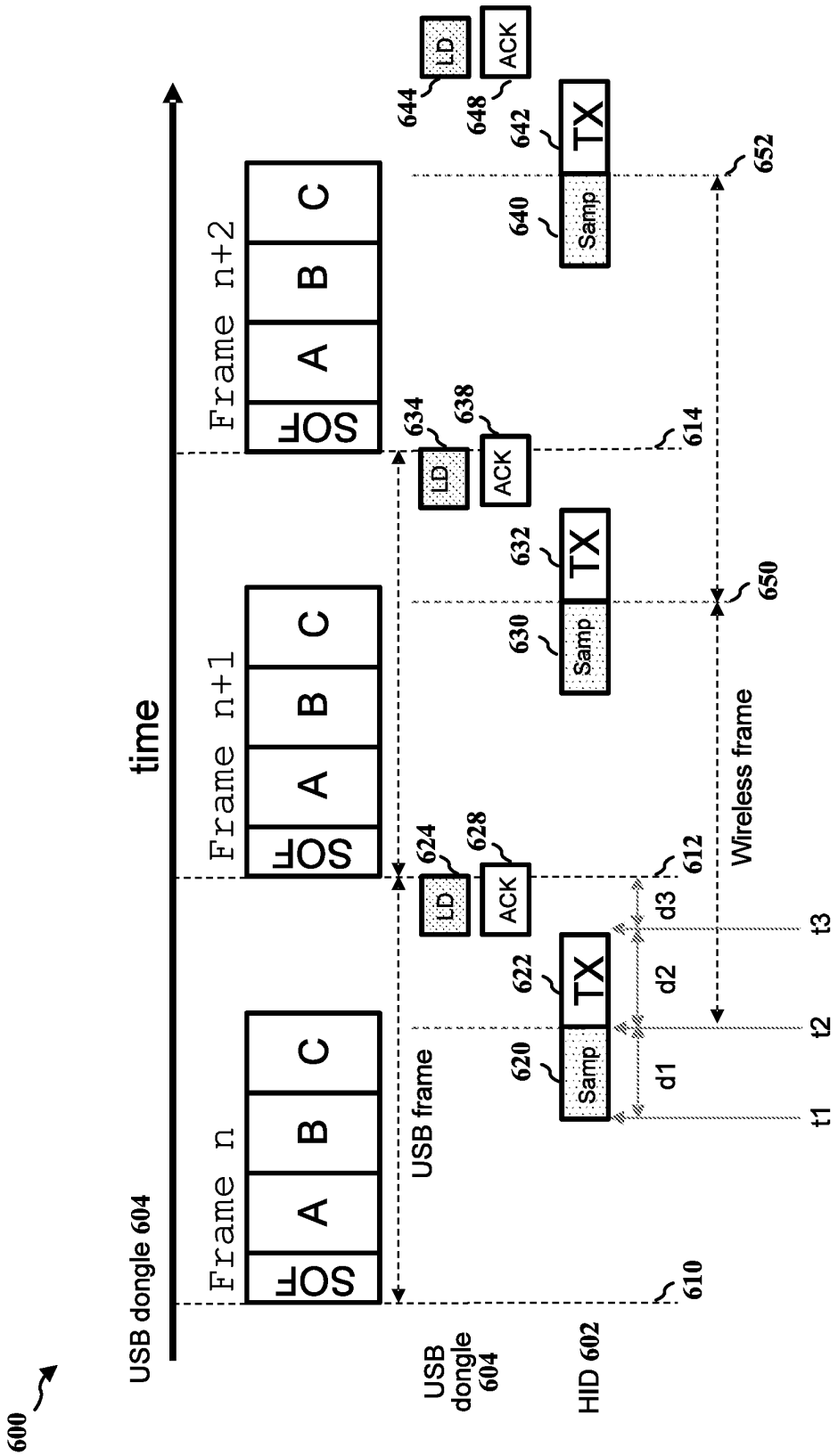
600
USB dongle 604
time
Frame n
SOF
A
B
C
Frame n+1
Frame n+2
USB frame
Wireless frame
USB dongle 604
HID 602
610
612
614
620
622
624
628
630
632
634
638
640
642
644
648
650
652
Samp
TX
LD
ACK
d1
d2
d3
t1
t2
t3

FIG. 6

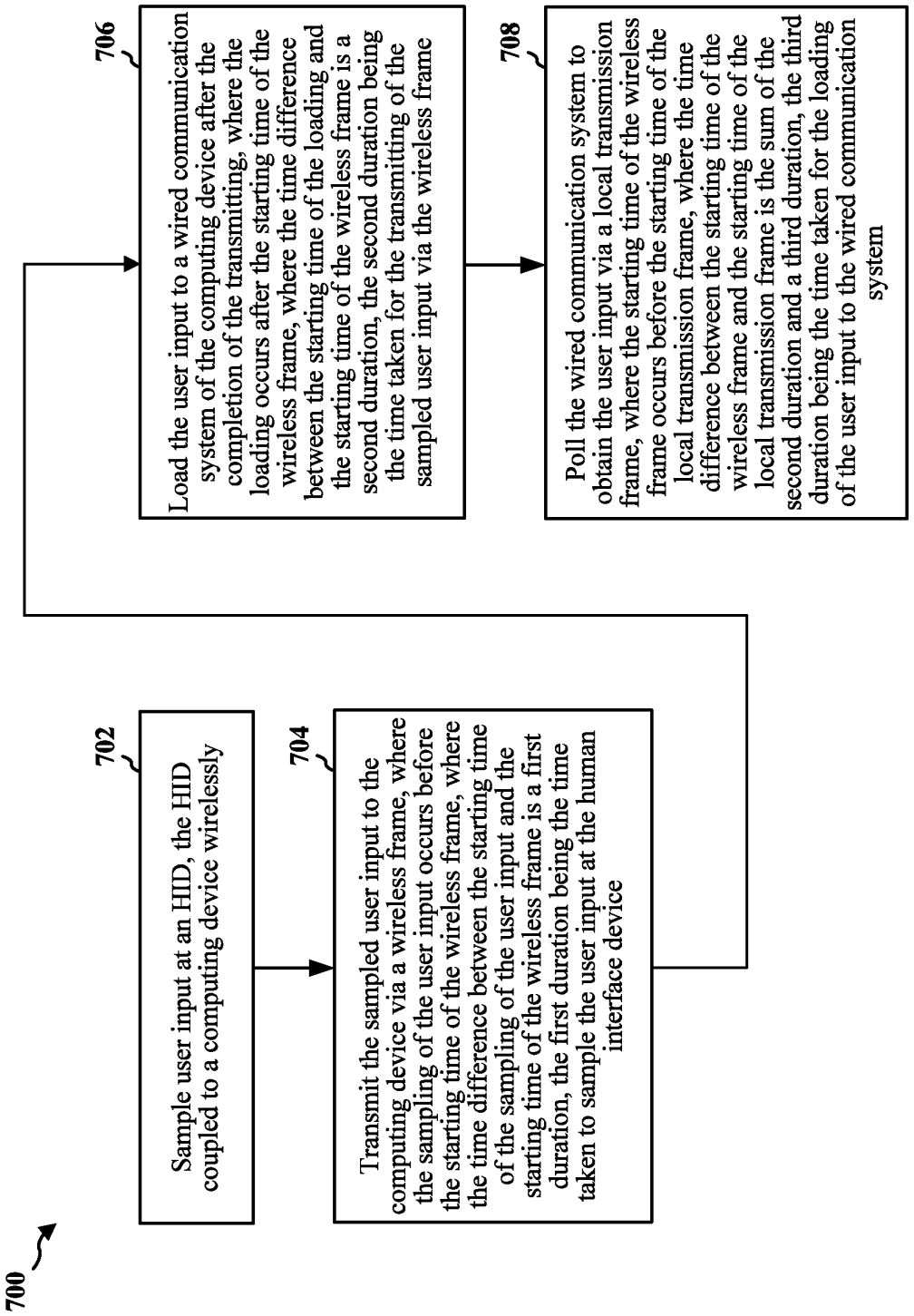
700
702
Sample user input at an HID, the HID coupled to a computing device wirelessly
704
Transmit the sampled user input to the computing device via a wireless frame, where the sampling of the user input occurs before the starting time of the wireless frame, where the time difference between the starting time of the sampling of the user input and the starting time of the wireless frame is a first duration, the first duration being the time taken to sample the user input at the human interface device
706
Load the user input to a wired communication system of the computing device after the completion of the transmitting, where the loading occurs after the starting time of the wireless frame, where the time difference between the starting time of the loading and the starting time of the wireless frame is a second duration, the second duration being the time taken for the transmitting of the sampled user input via the wireless frame
708
Poll the wired communication system to obtain the user input via a local transmission frame, where the starting time of the wireless frame occurs before the starting time of the local transmission frame, where the time difference between the starting time of the wireless frame and the starting time of the local transmission frame is the sum of the second duration and a third duration, the third duration being the time taken for the loading of the user input to the wired communication system

FIG. 7

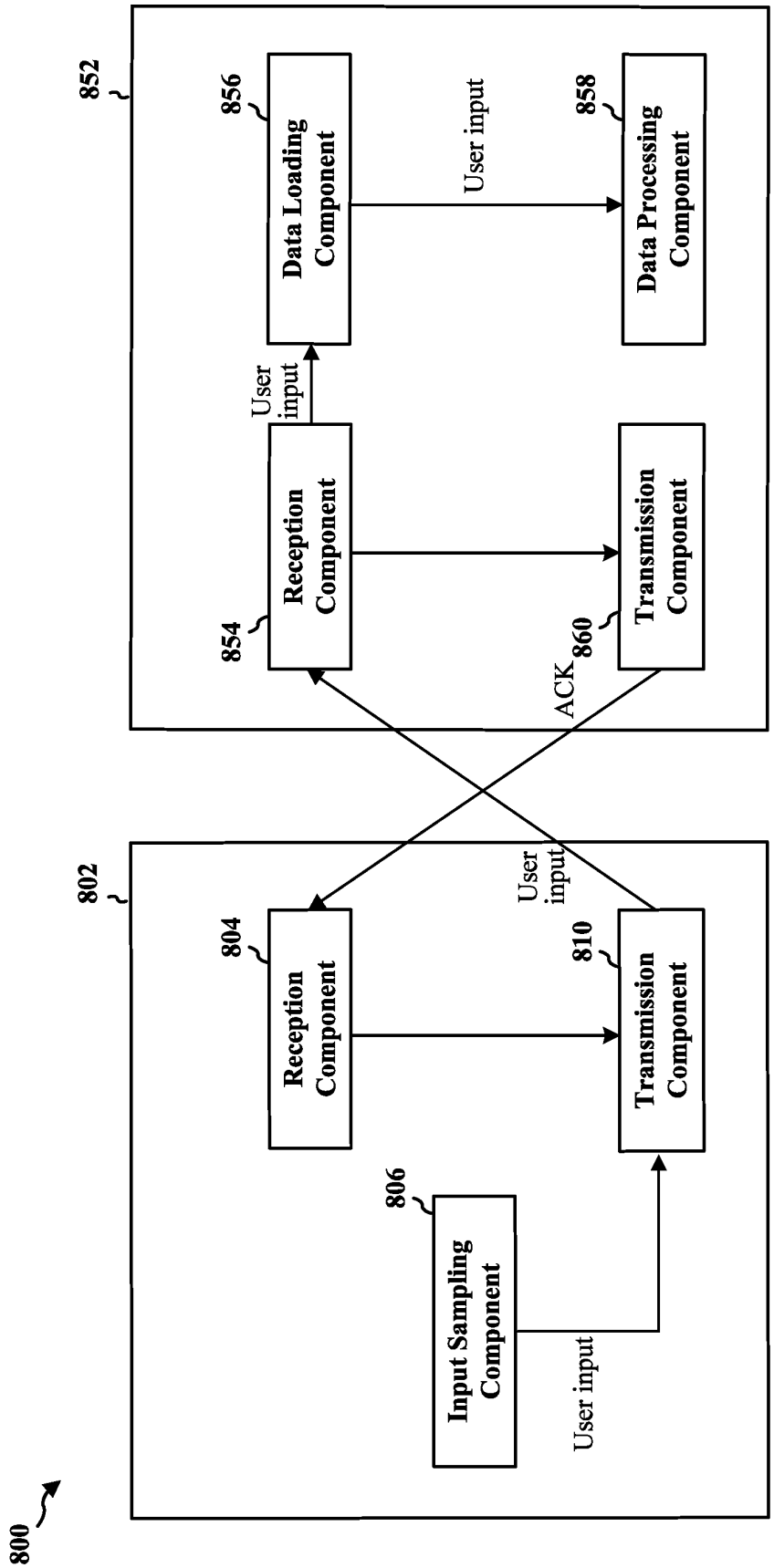
800
802
804
Reception Component
806
Input Sampling Component
User input
810
Transmission Component
User input
852
854
Reception Component
User input
856
Data Loading Component
User input
858
Data Processing Component
ACK
860
Transmission Component

FIG. 8

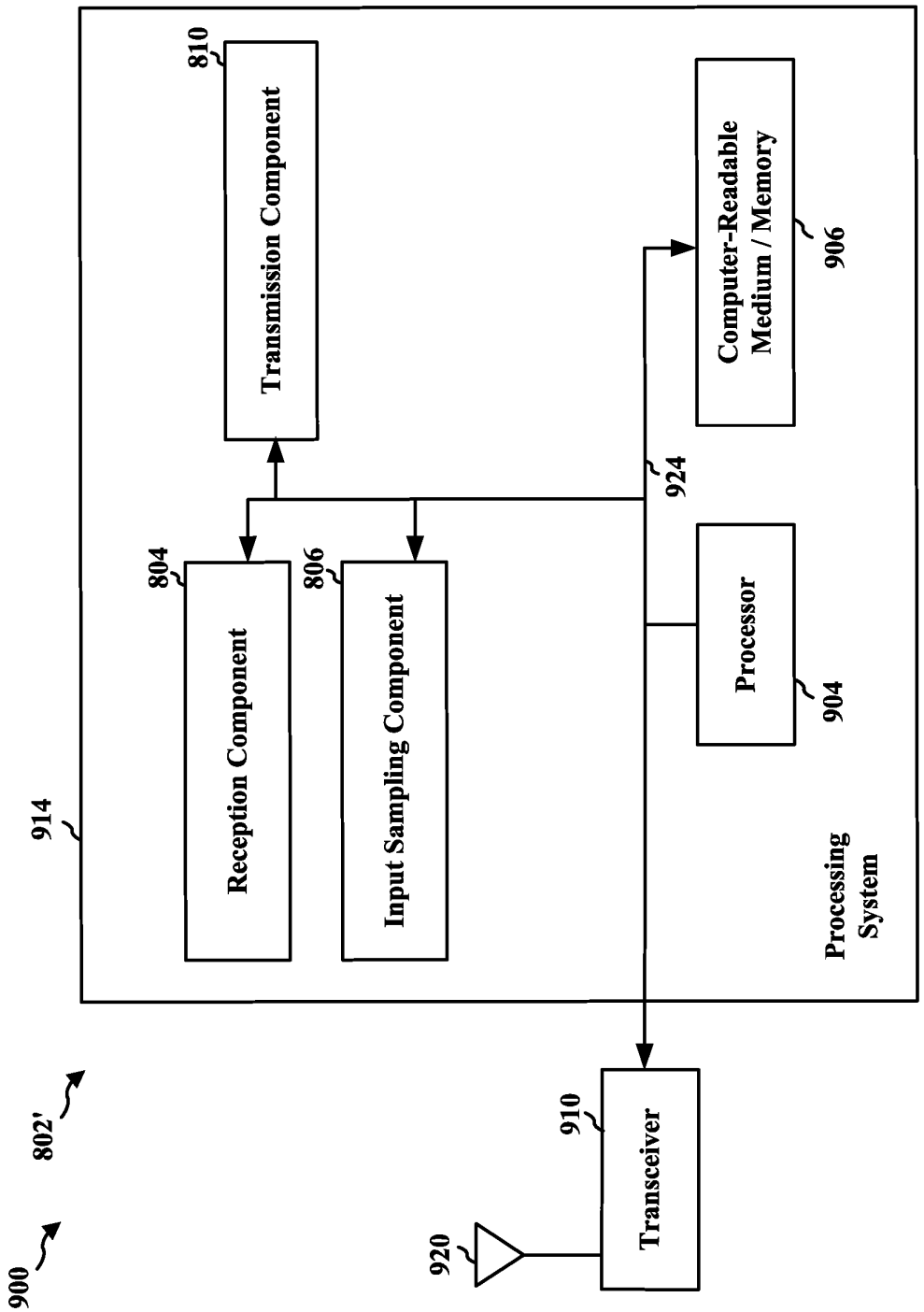
900
802'
914
Processing System
Transmission Component
810
Reception Component
804
Input Sampling Component
806
Computer-Readable Medium / Memory
906
Processor
904
924
Transceiver
910
920

FIG. 9

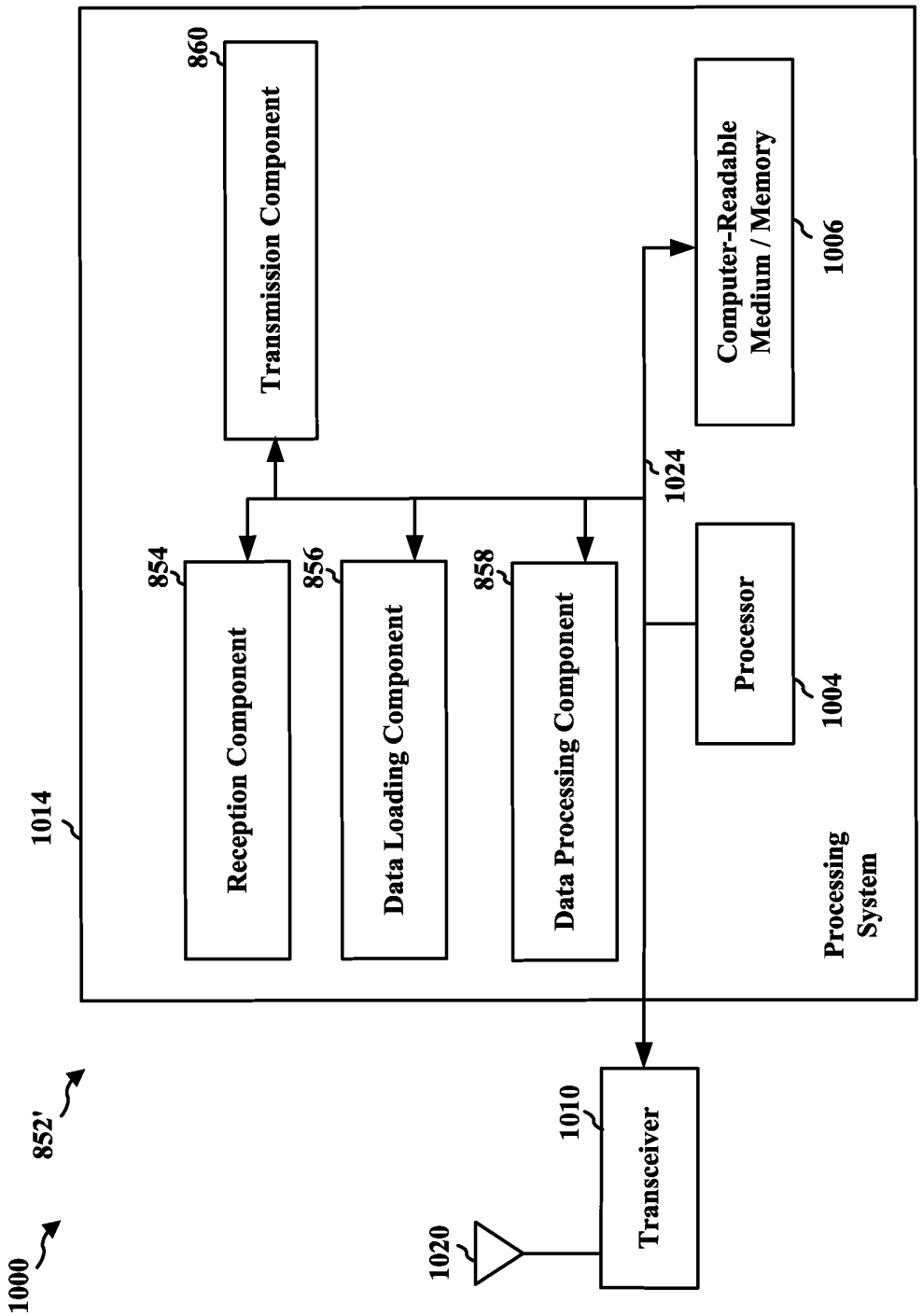
1000
852'
1014
Processing System
Reception Component
854
Data Loading Component
856
Data Processing Component
858
Transmission Component
860
Processor
1004
Computer-Readable Medium / Memory
1006
1024
Transceiver
1010
1020

FIG. 10