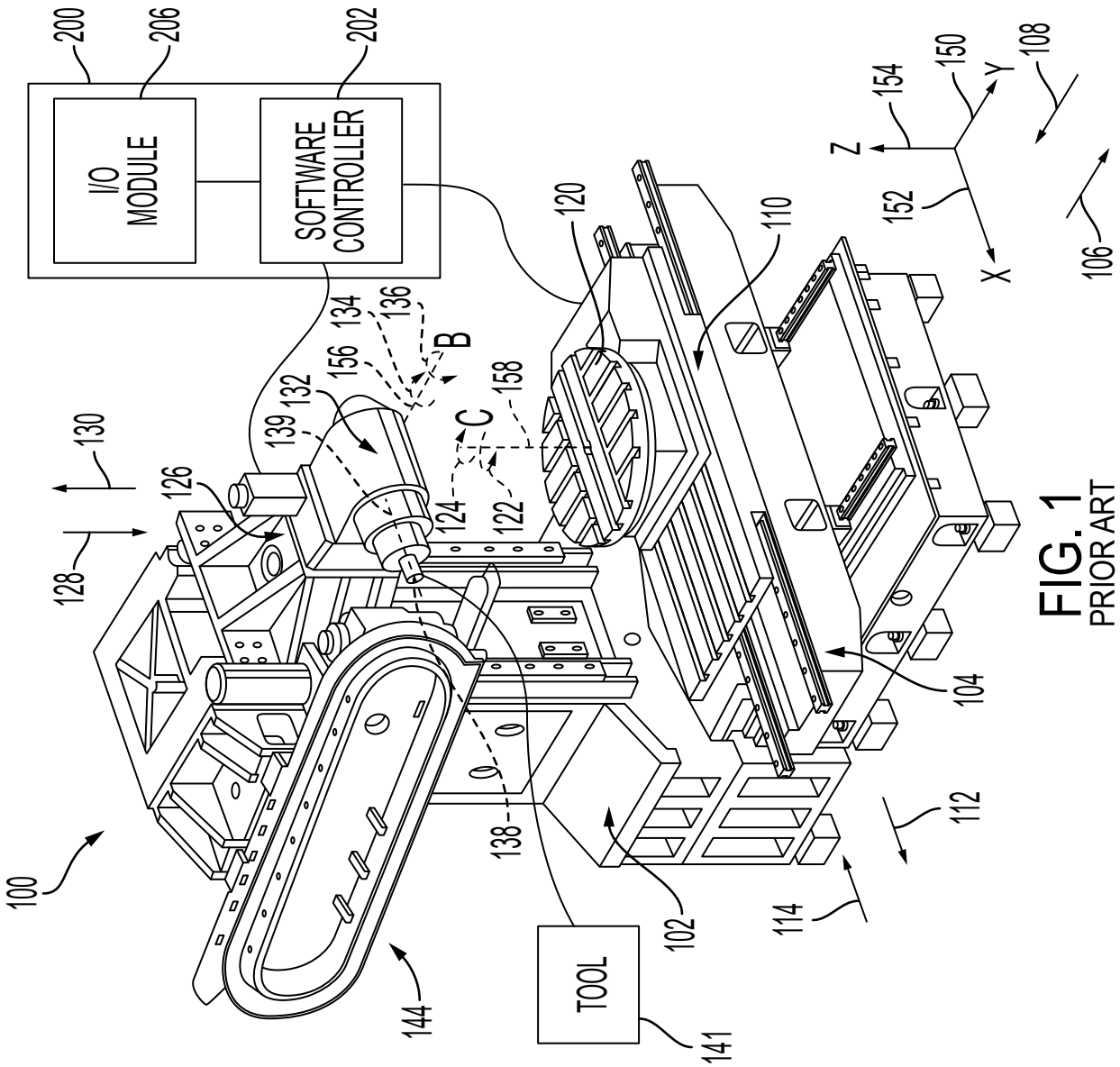

FIG. 1
PRIOR ART

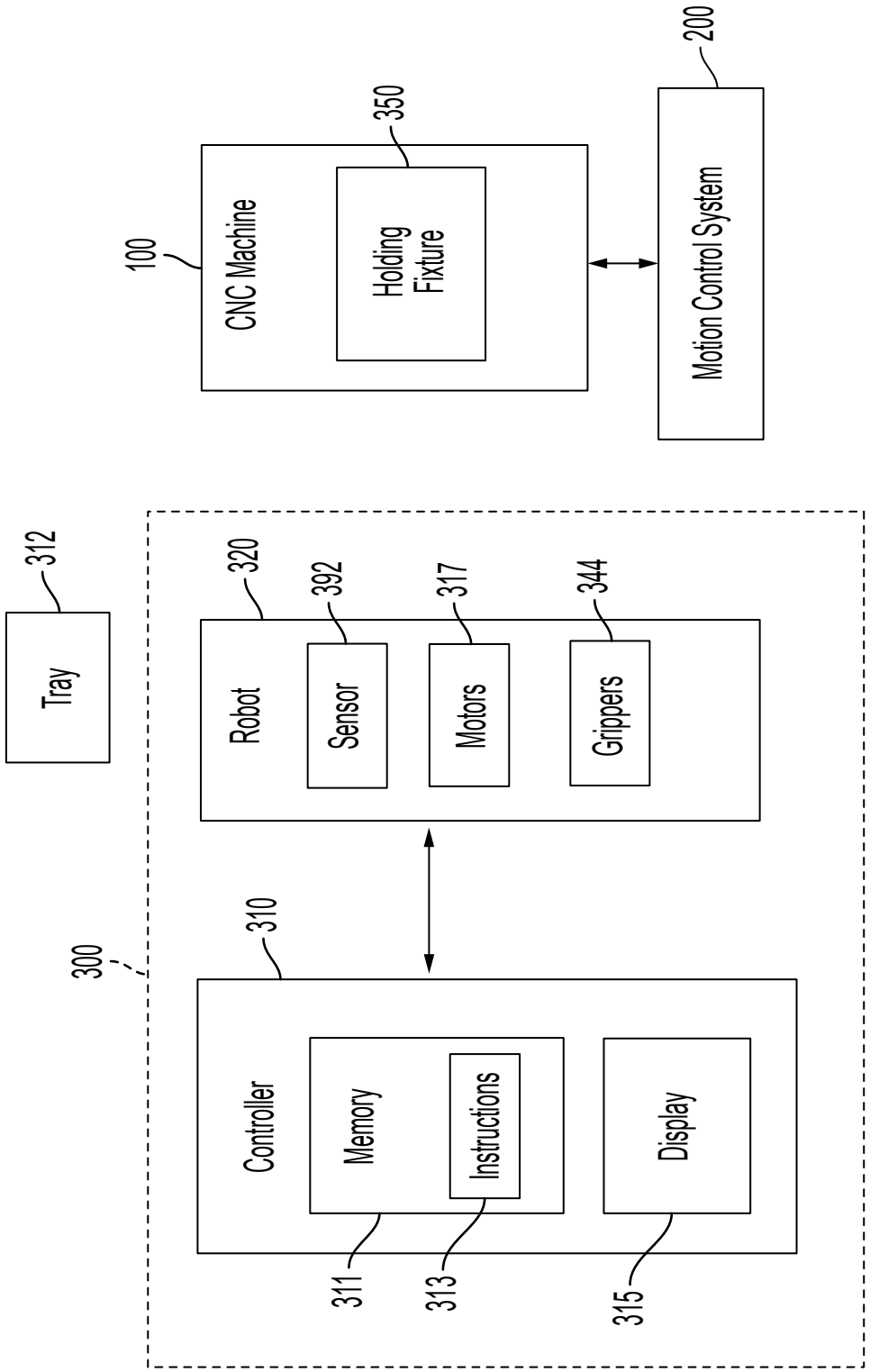
100
CNC Machine
350
Holding Fixture
200
Motion Control System
300
312
Tray
320
Robot
392
Sensor
317
Motors
344
Grippers
310
Controller
Memory
Instructions
Display
311
313
315

FIG. 2

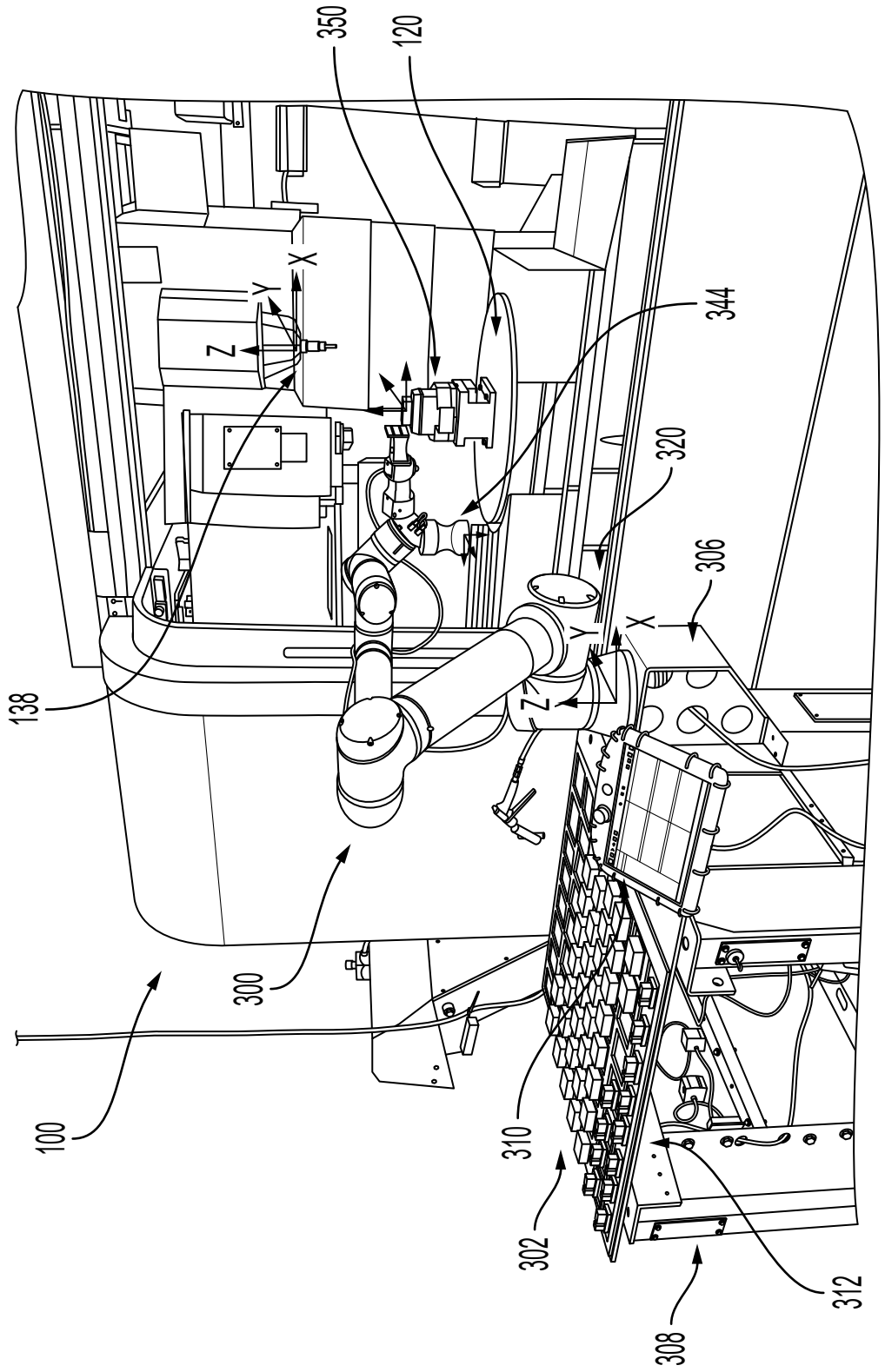

FIG. 3

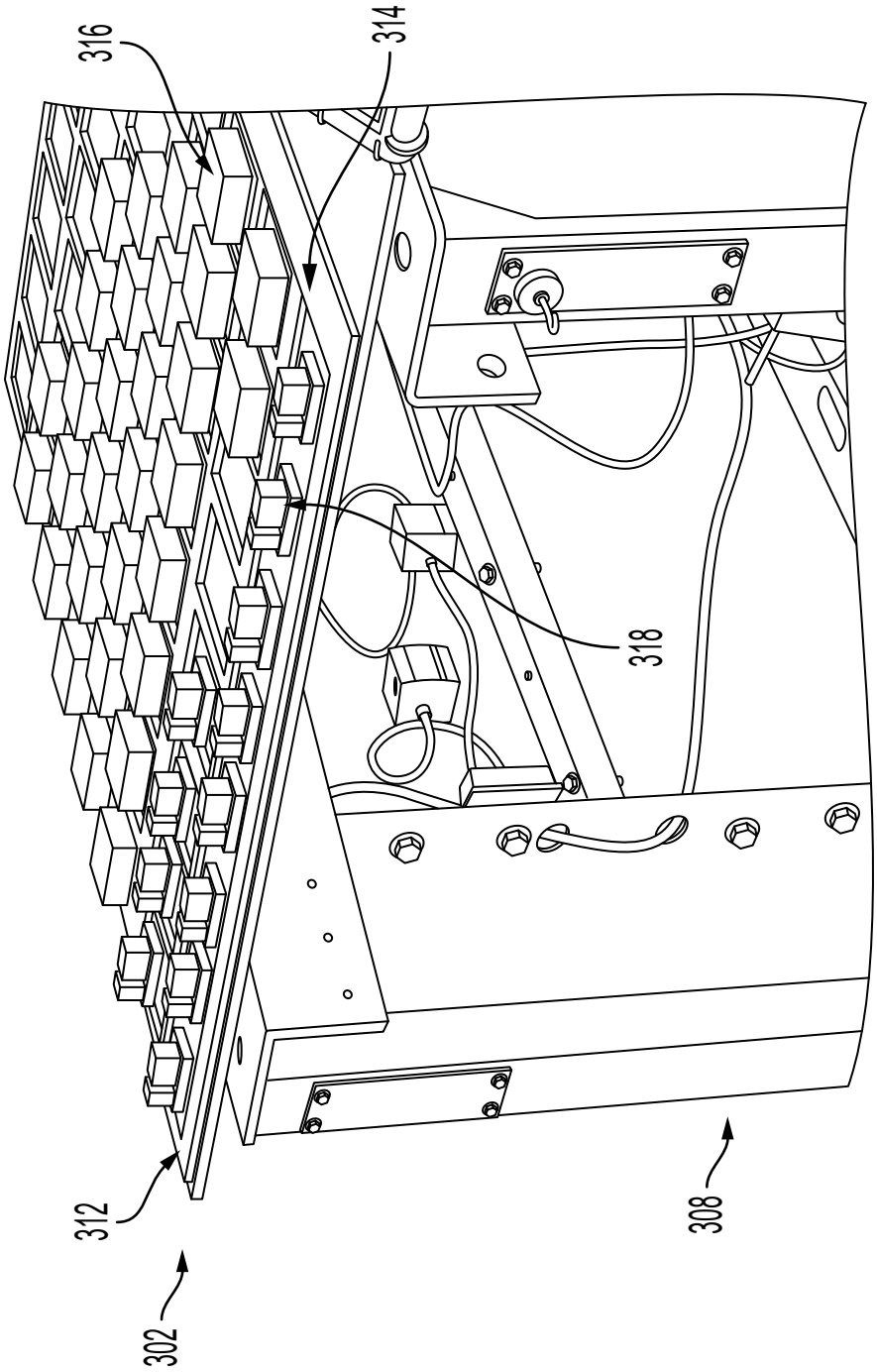

FIG. 4

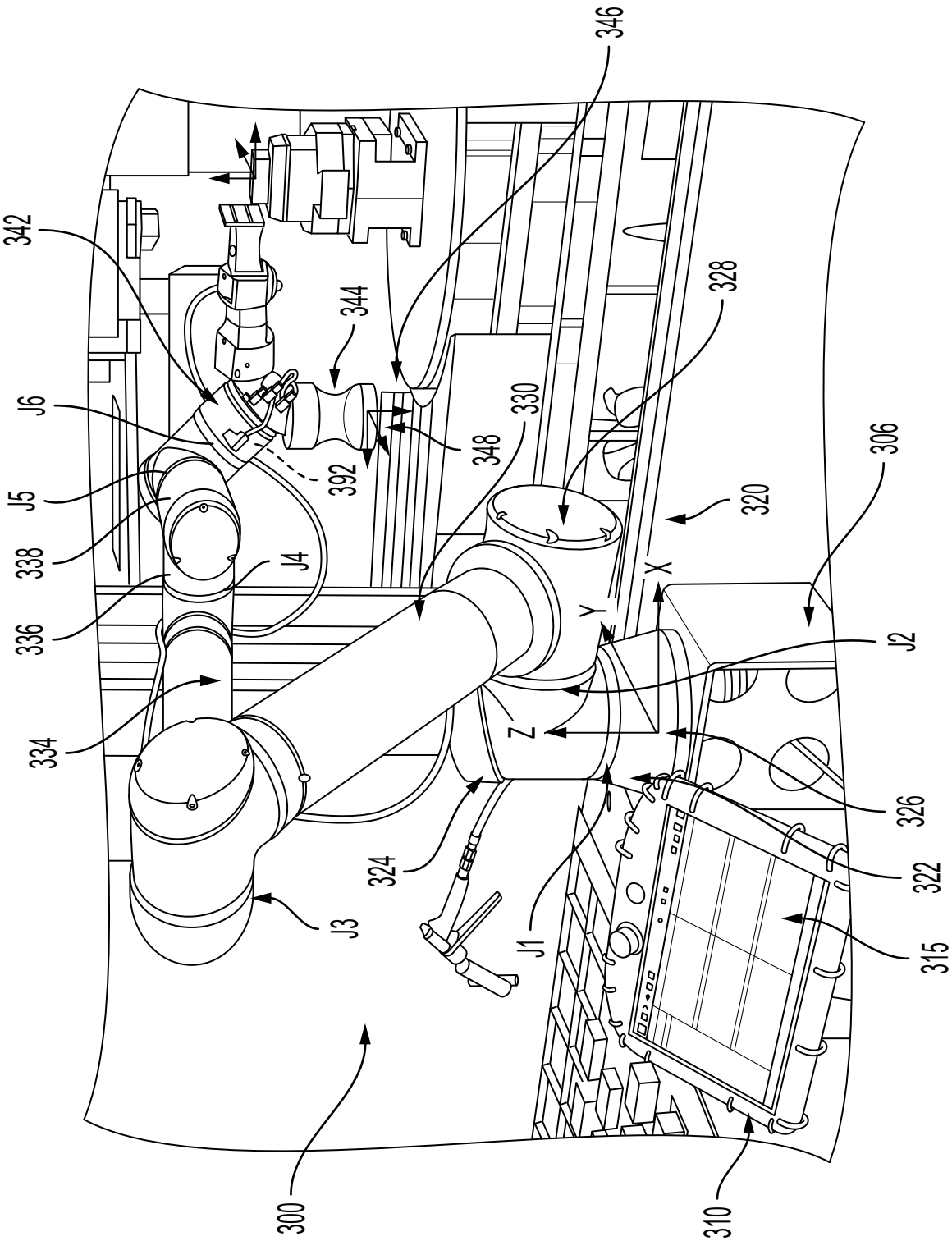
346
342
344
328
J6
330
348
306
392
J5
320
338
J4
X
336
Y
J2
334
Z
326
324
322
J3
J1
315
300
310

FIG. 5

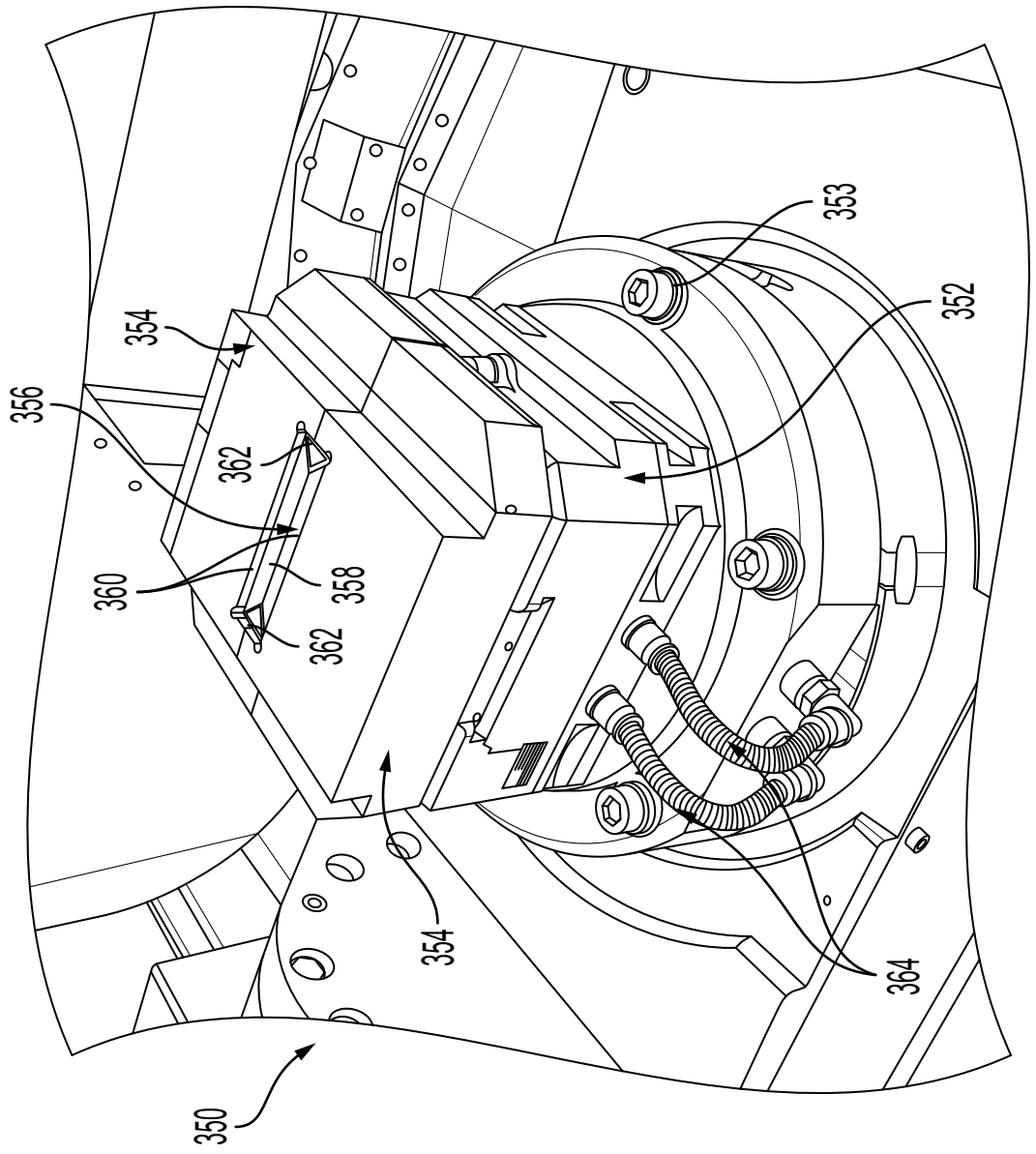

FIG. 6

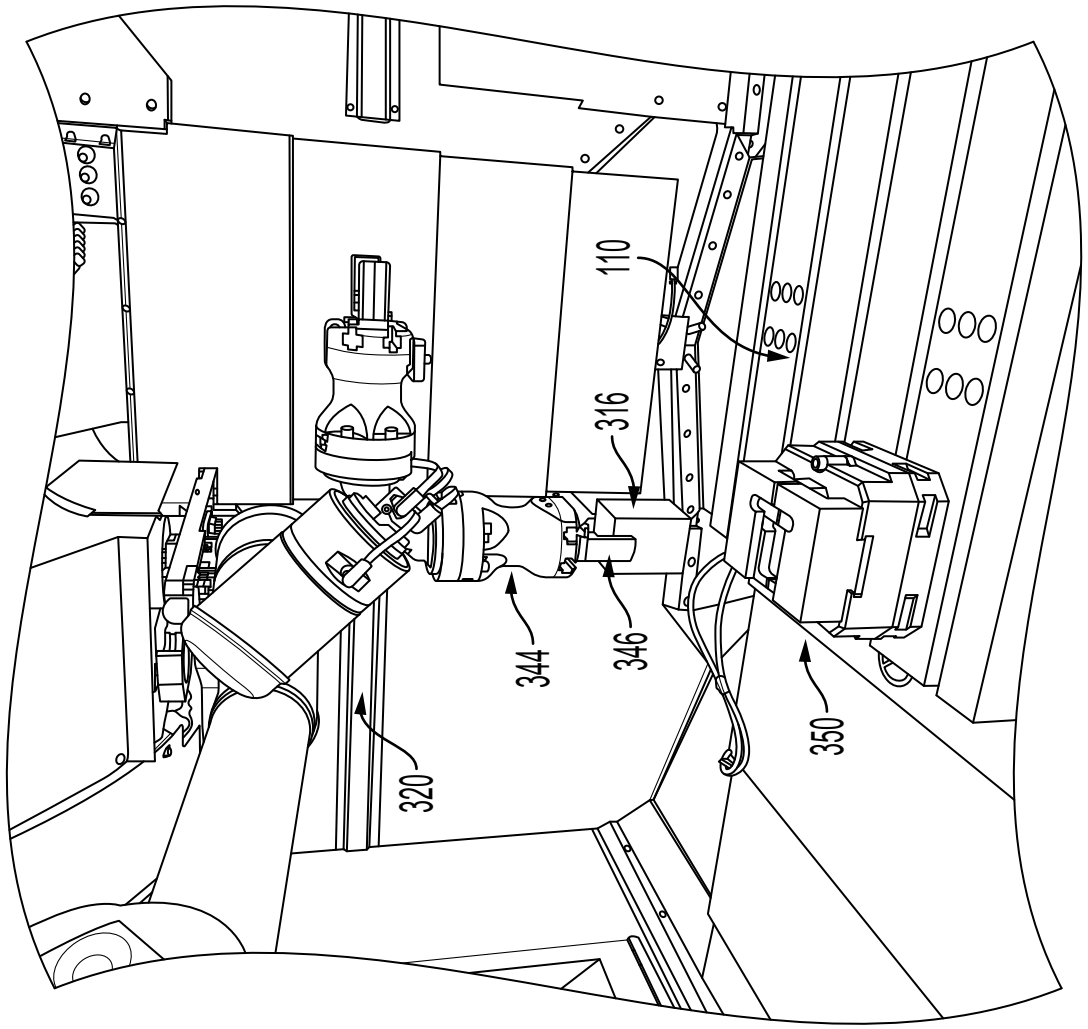

FIG. 7

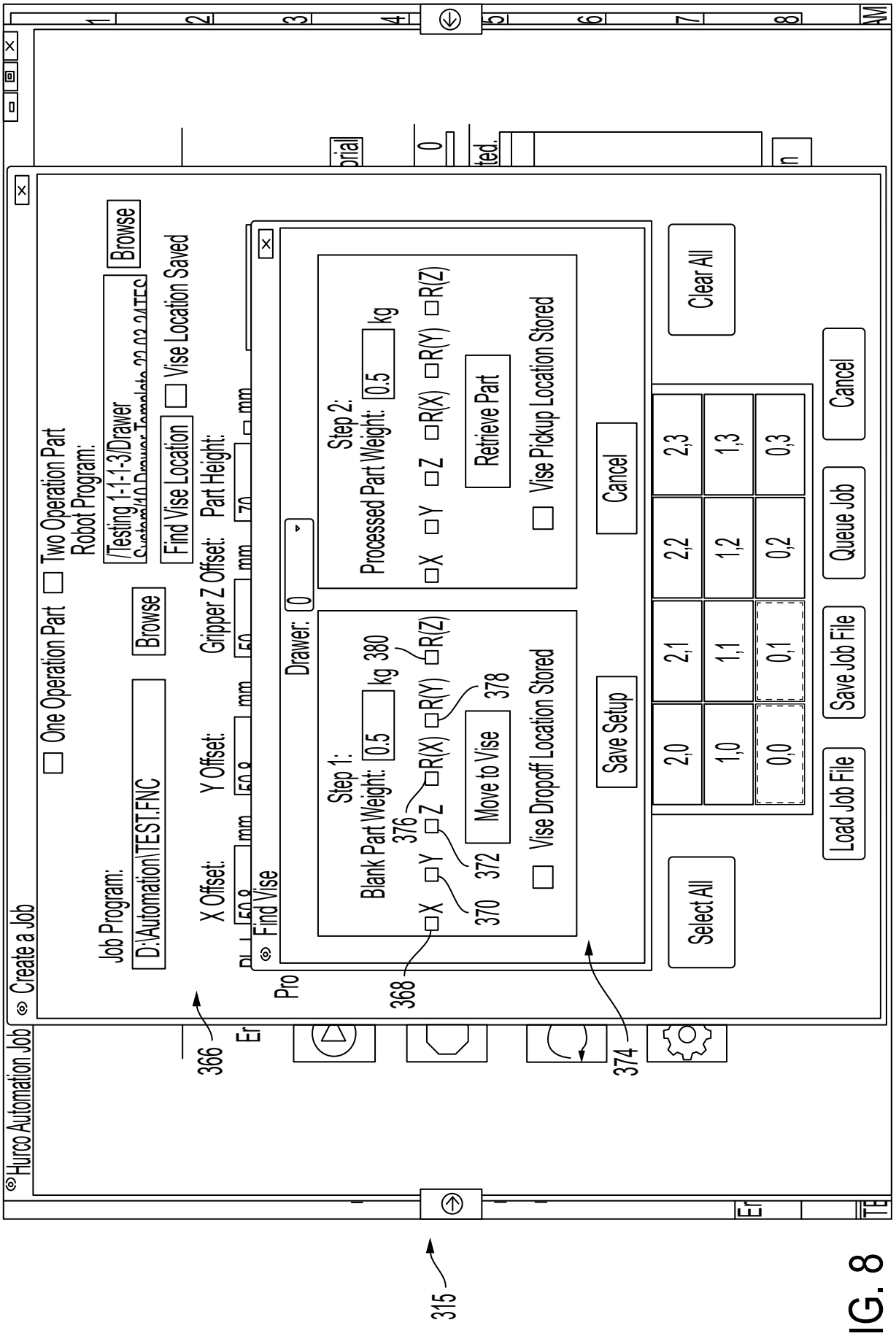
Hurco Automation Job
Create a Job
One Operation Part
Two Operation Part
Robot Program:
/Testing 1-1-1-3/Drawer
Browse
Job Program:
D:\Automation\TEST.FNC
Browse
Find Vise Location
Vise Location Saved
X Offset:
Y Offset:
Gripper Z Offset:
Part Height:
Find Vise
Drawer:
Step 1:
Blank Part Weight:
0.5
kg
380
R(Z)
376
Z
R(X)
R(Y)
378
X
Y
372
370
Move to Vise
Vise Dropoff Location Stored
Save Setup
Cancel
Step 2:
Processed Part Weight:
0.5
kg
X
Y
Z
R(X)
R(Y)
R(Z)
Retrieve Part
Vise Pickup Location Stored
Cancel
Clear All
2,0
2,1
2,2
2,3
1,0
1,1
1,2
1,3
0,0
0,1
0,2
0,3
Select All
Load Job File
Save Job File
Queue Job
Cancel
366
368
374
315

FIG. 8

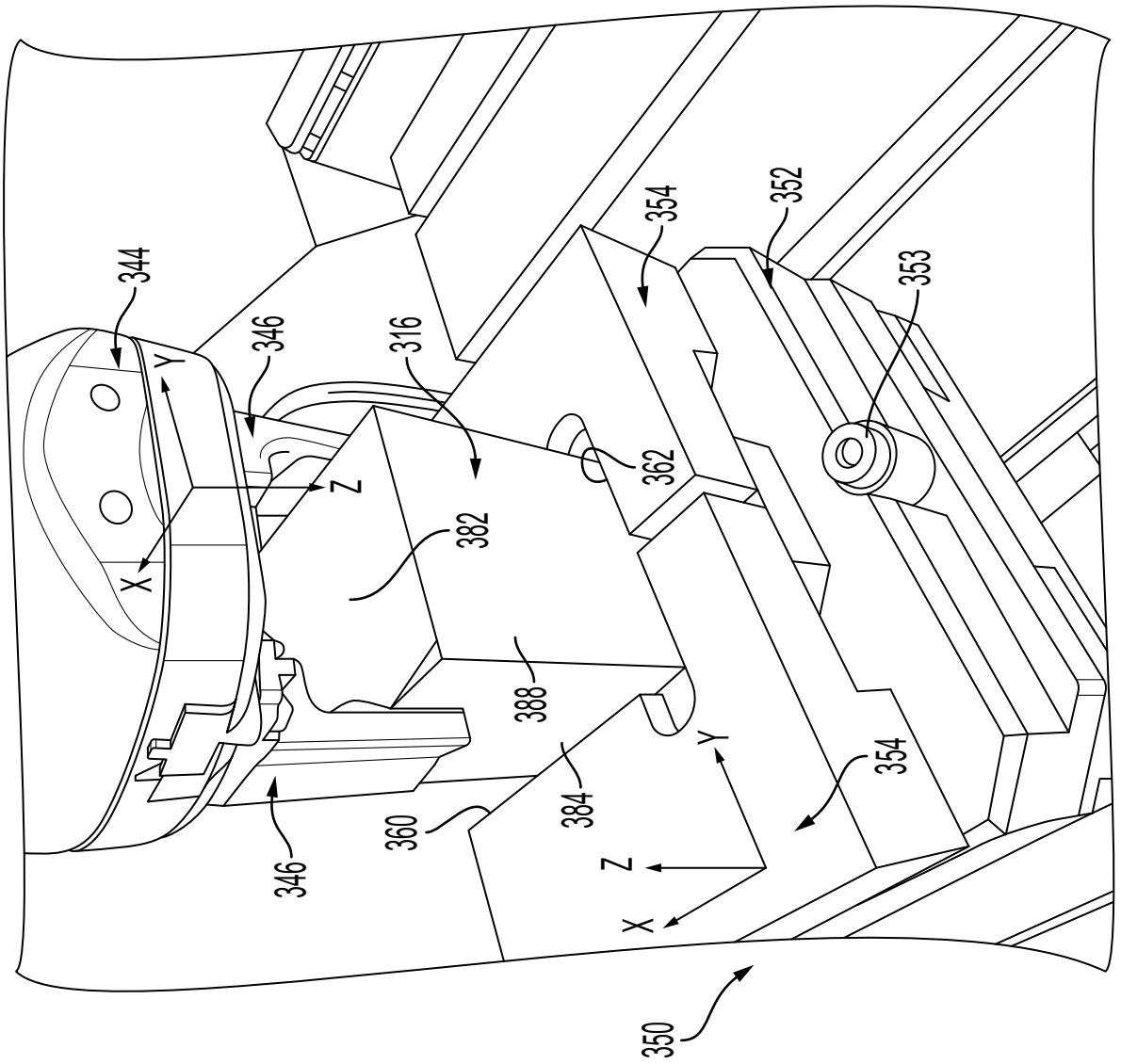

FIG. 9

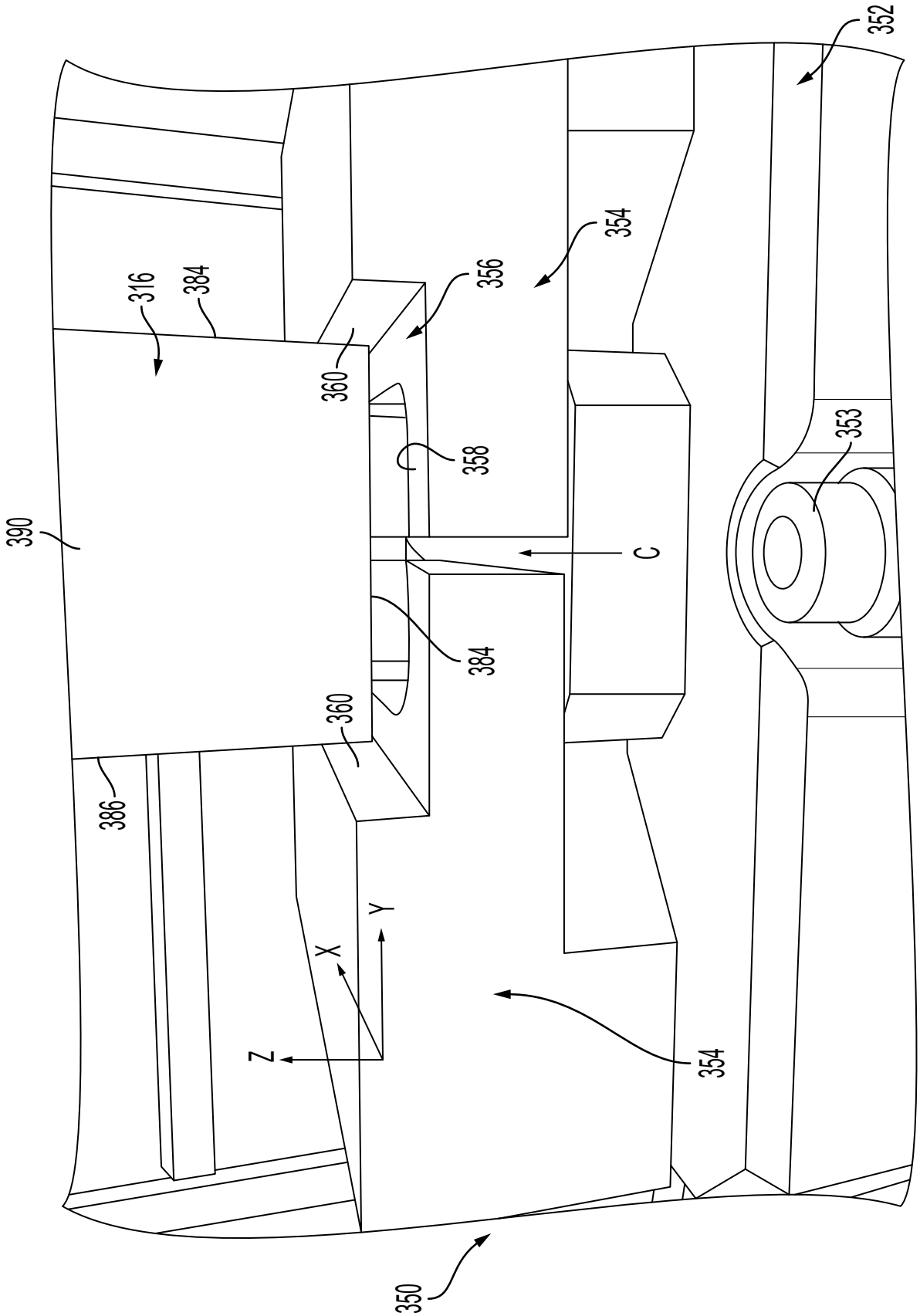

FIG. 10

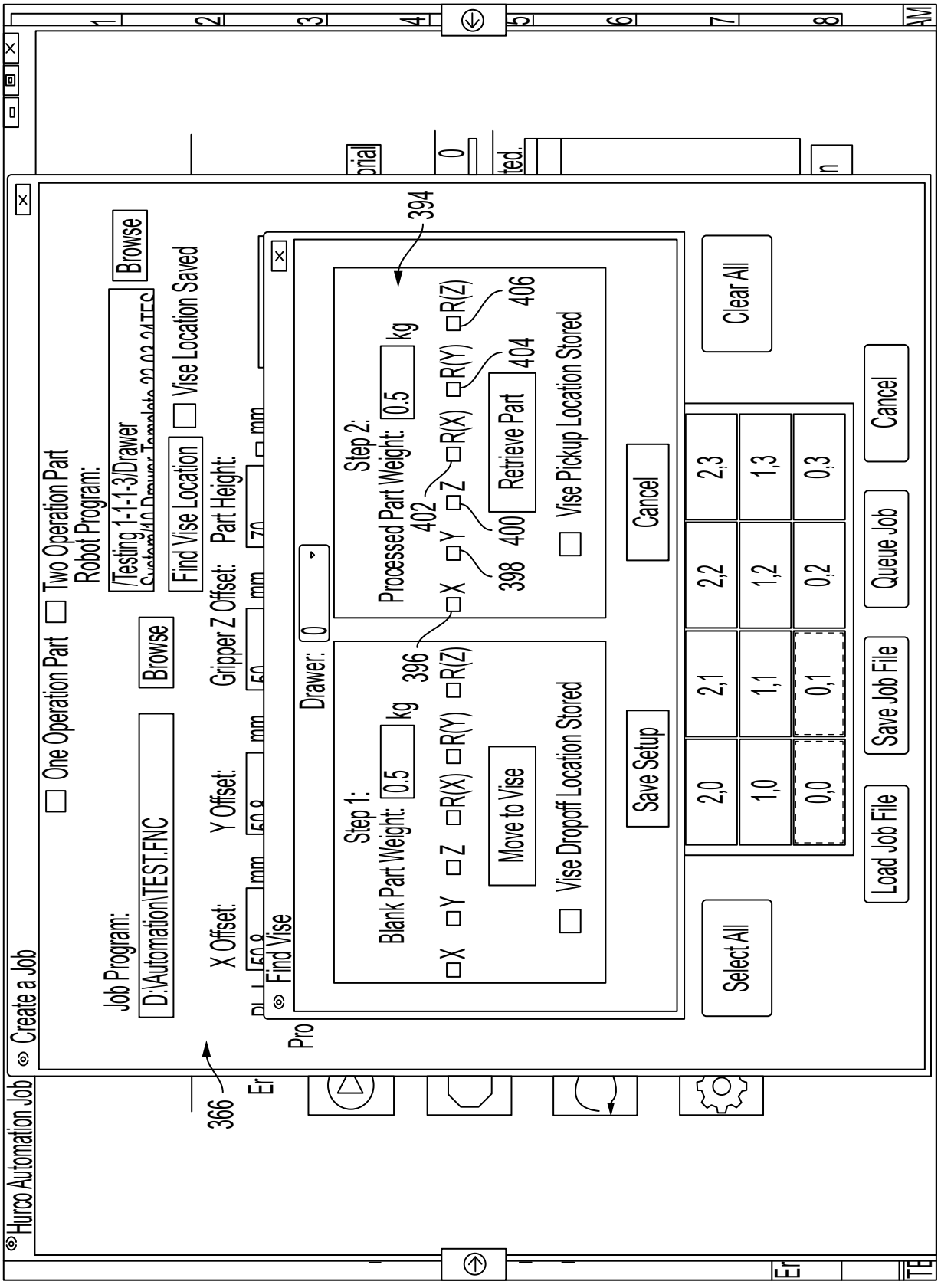
Hurco Automation Job
Create a Job
One Operation Part
Two Operation Part
Robot Program:
/Testing 1-1-1-3/Drawer
Browse
Job Program:
D:\Automation\TEST.FNC
Browse
Find Vise Location
Vise Location Saved
X Offset:
Y Offset:
Gripper Z Offset:
Part Height:
mm
Find Vise
Drawer:
Step 1:
Blank Part Weight:
0.5
kg
X
Y
Z
R(X)
R(Y)
R(Z)
Move to Vise
Vise Dropoff Location Stored
Save Setup
Cancel
Step 2:
Processed Part Weight:
0.5
kg
Retrieve Part
Vise Pickup Location Stored
Cancel
Clear All
Select All
Load Job File
Save Job File
Queue Job
Cancel
2,0
2,1
2,2
2,3
1,0
1,1
1,2
1,3
0,0
0,1
0,2
0,3
366
394
396
398
400
402
404
406

FIG. 11

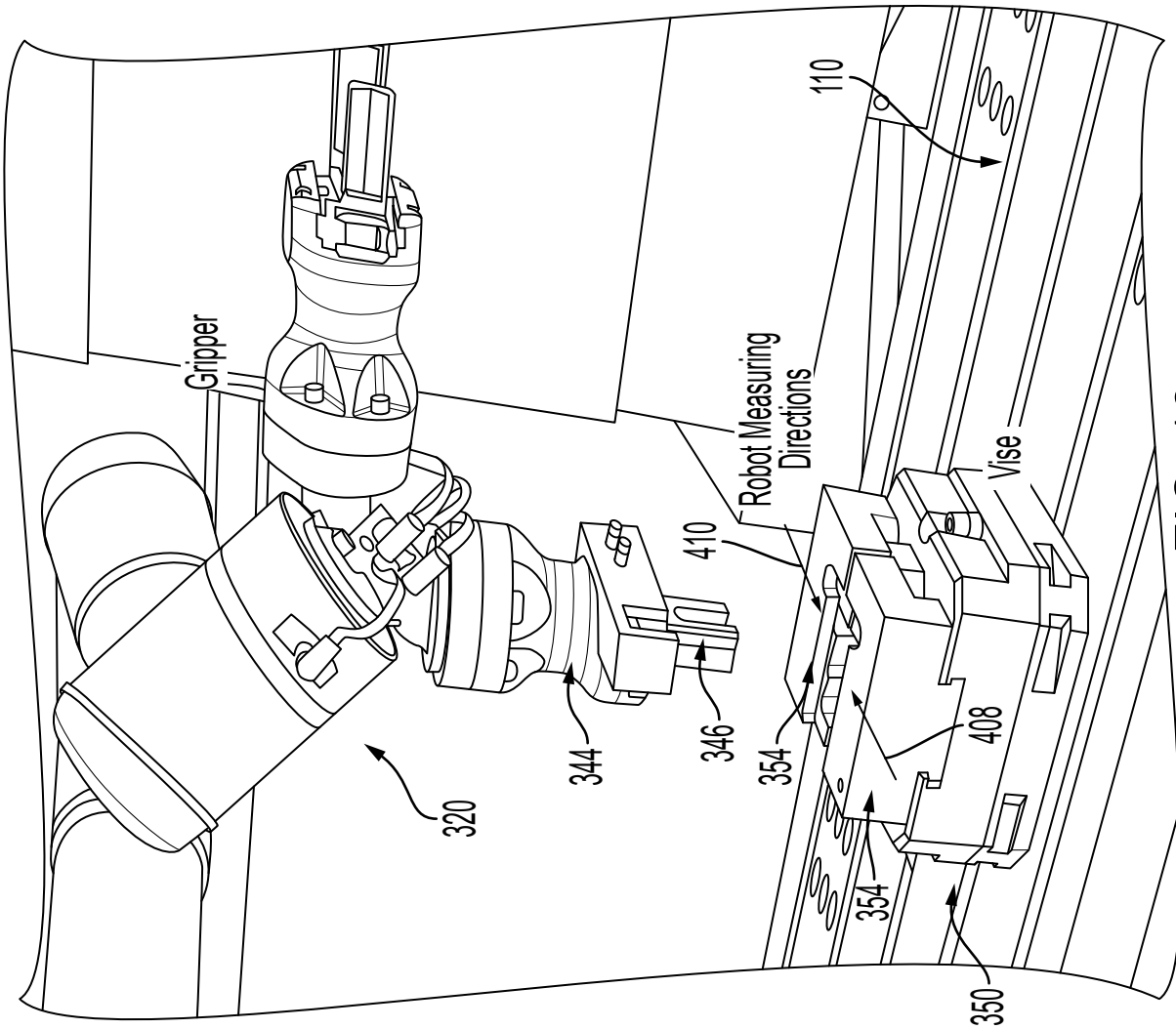
Gripper
110
Robot Measuring Directions
Vise
410
320
344
346
354
408
354
350

FIG. 12

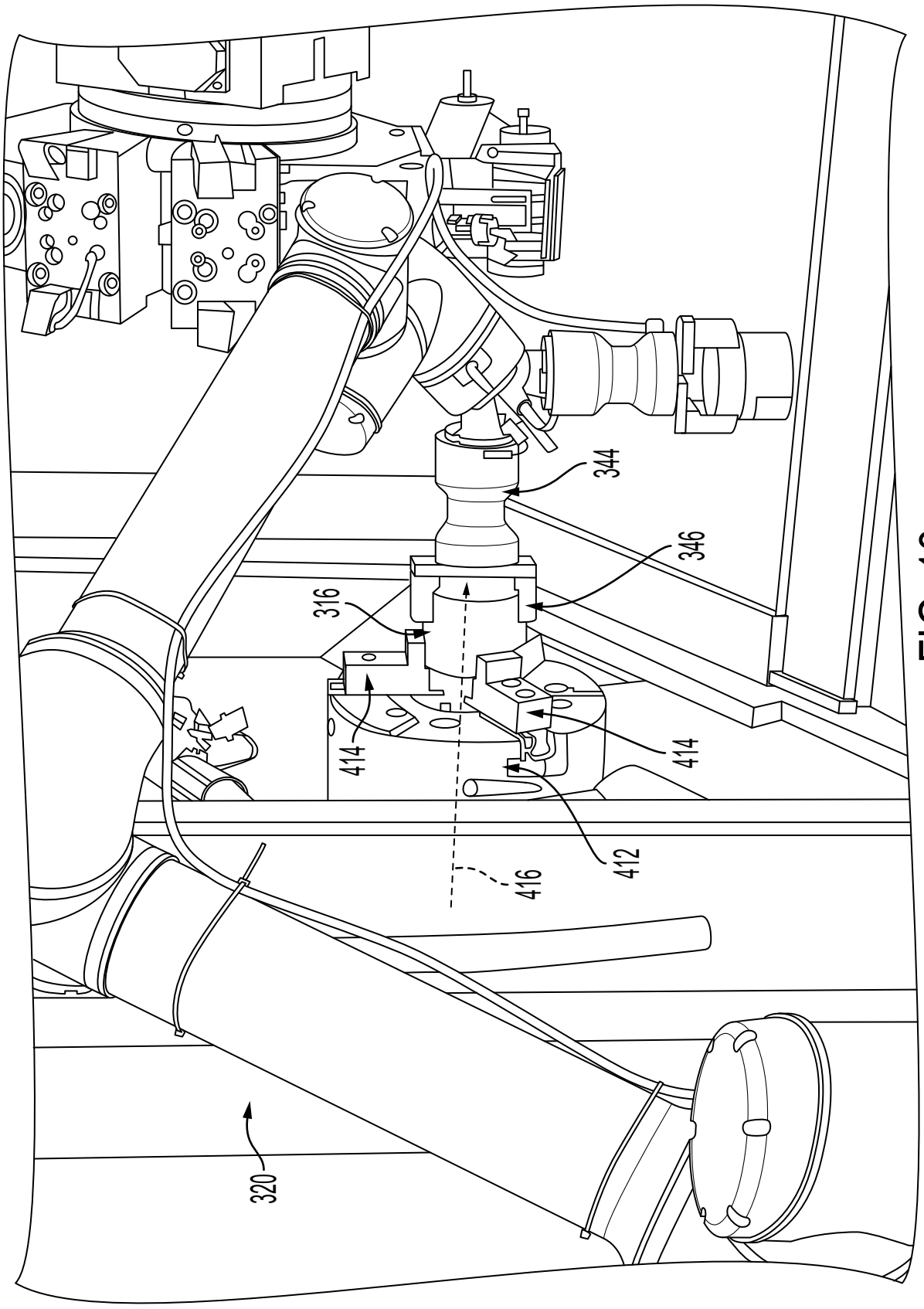

FIG. 13

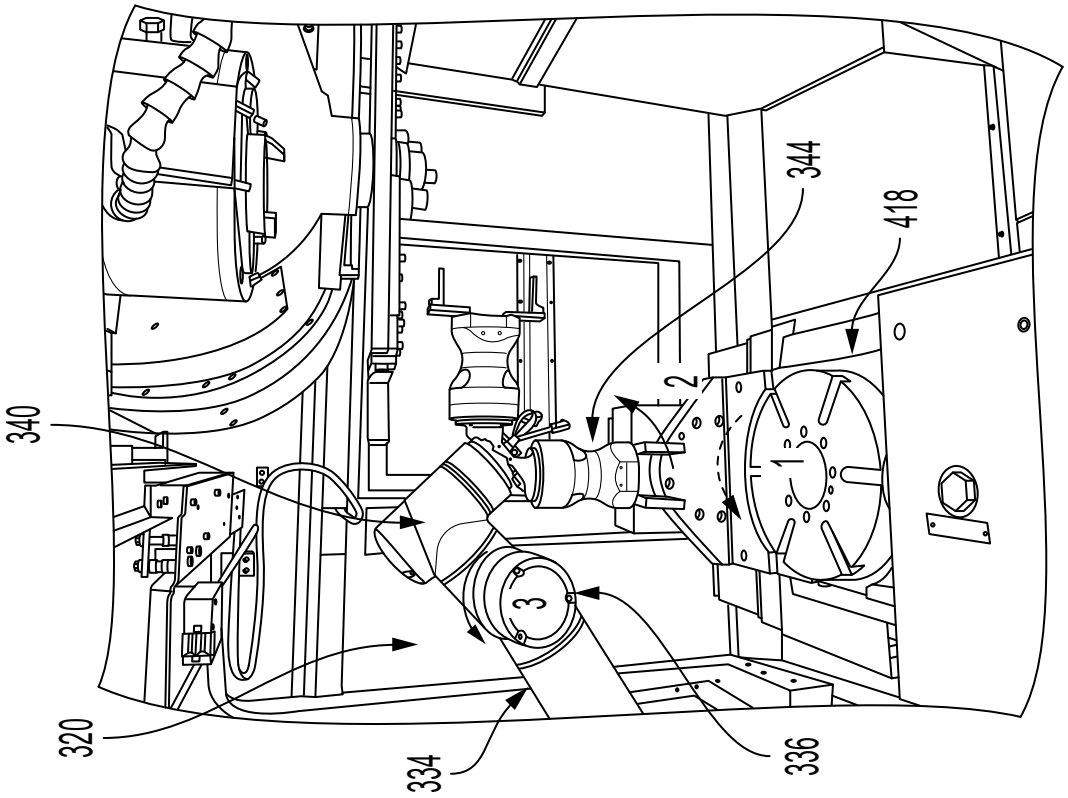

FIG. 14B

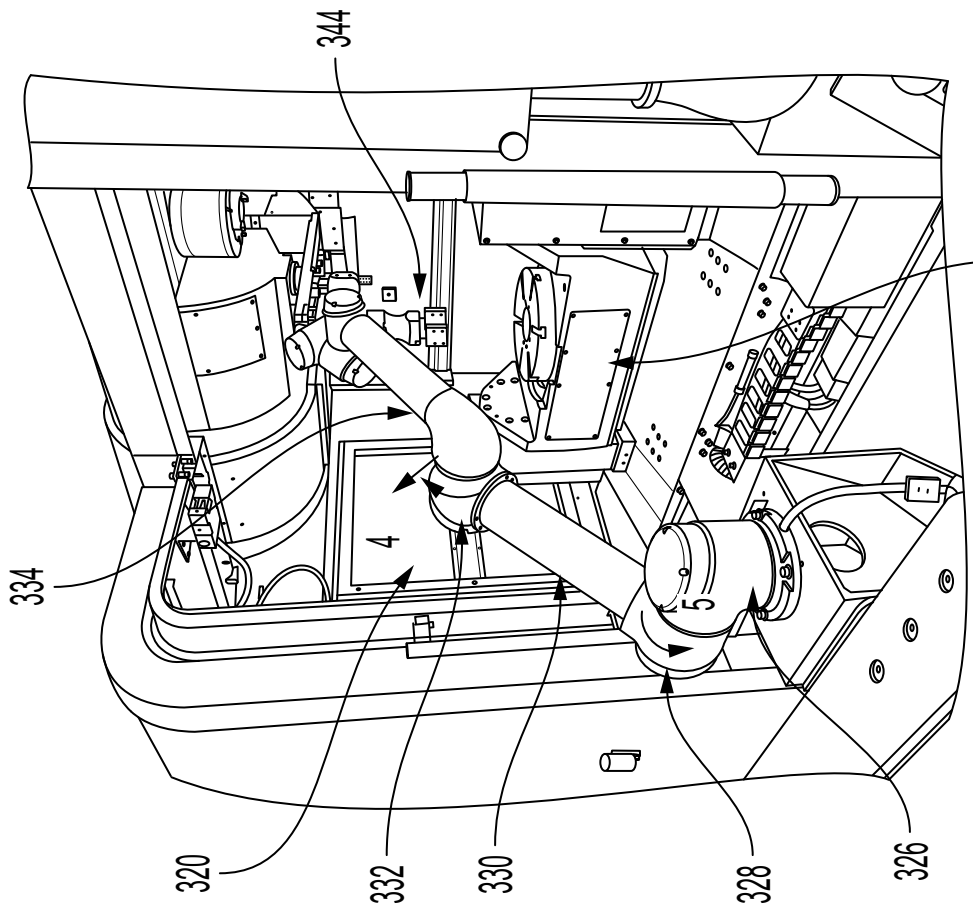

FIG. 14A

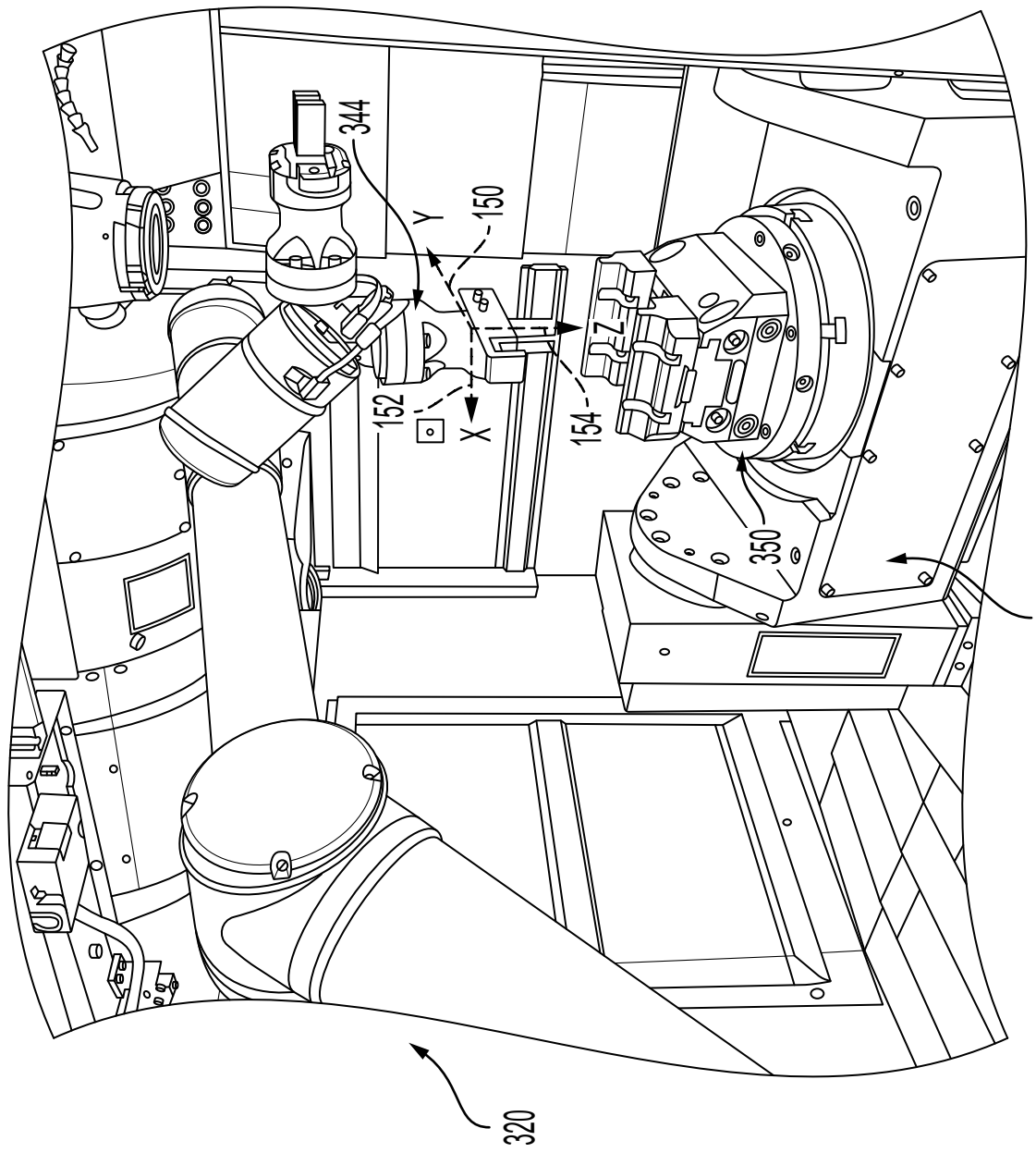

FIG. 15

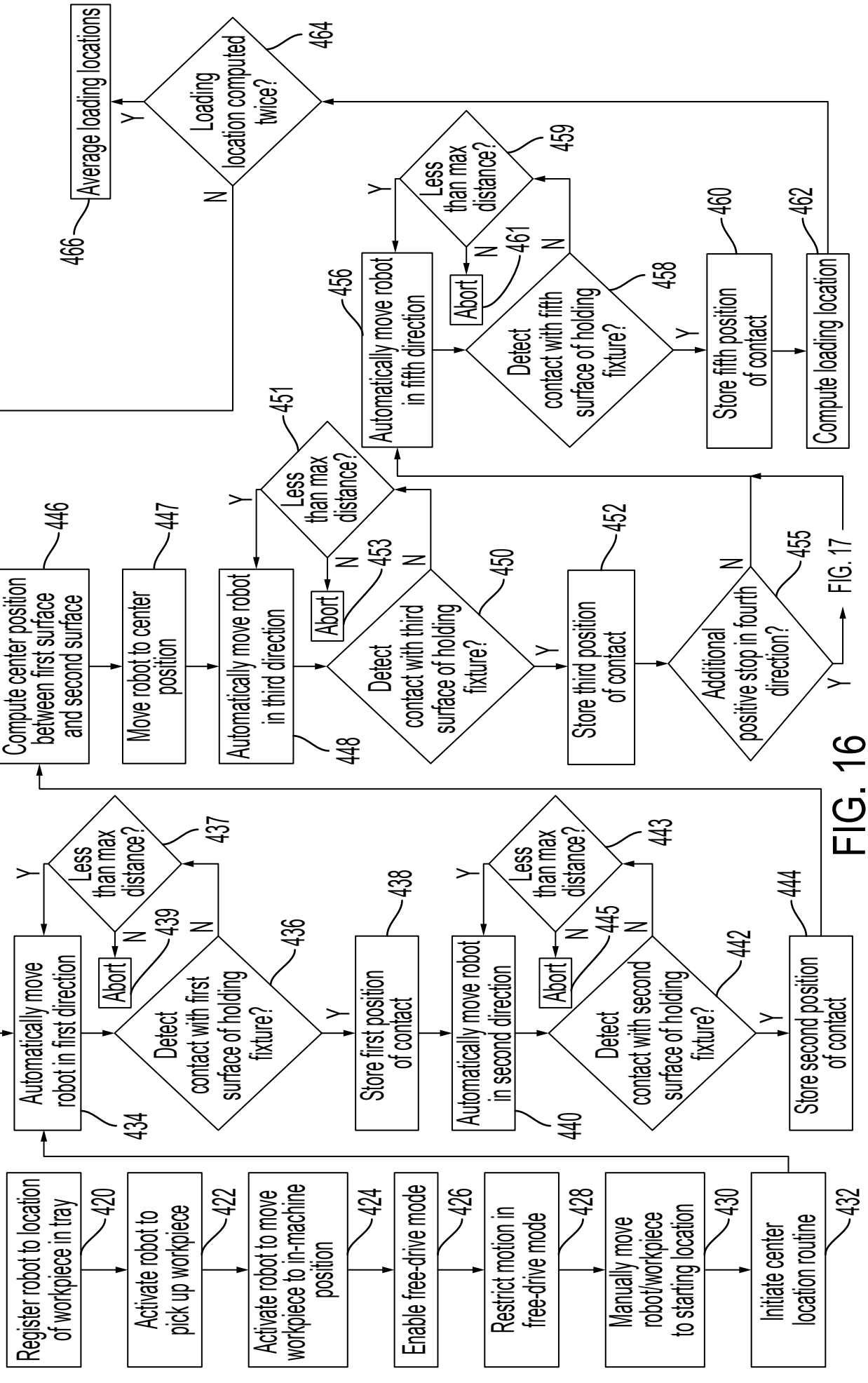
Register robot to location of workpiece in tray
420
Activate robot to pick up workpiece
422
Activate robot to move workpiece to in-machine position
424
Enable free-drive mode
426
Restrict motion in free-drive mode
428
Manually move robot/workpiece to starting location
430
Initiate center location routine
432
Automatically move robot in first direction
434
Less than max distance?
437
Abort
439
Detect contact with first surface of holding fixture?
436
Store first position of contact
438
Automatically move robot in second direction
440
Less than max distance?
443
Abort
445
Detect contact with second surface of holding fixture?
442
Store second position of contact
444
Compute center position between first surface and second surface
446
Move robot to center position
447
Automatically move robot in third direction
448
Less than max distance?
451
Abort
453
Detect contact with third surface of holding fixture?
450
Store third position of contact
452
Additional positive stop in fourth direction?
455
Automatically move robot in fifth direction
456
Less than max distance?
459
Abort
461
Detect contact with fifth surface of holding fixture?
458
Store fifth position of contact
460
Compute loading location
462
Loading location computed twice?
464
Average loading locations
466
Y
N
FIG. 17

FIG. 16

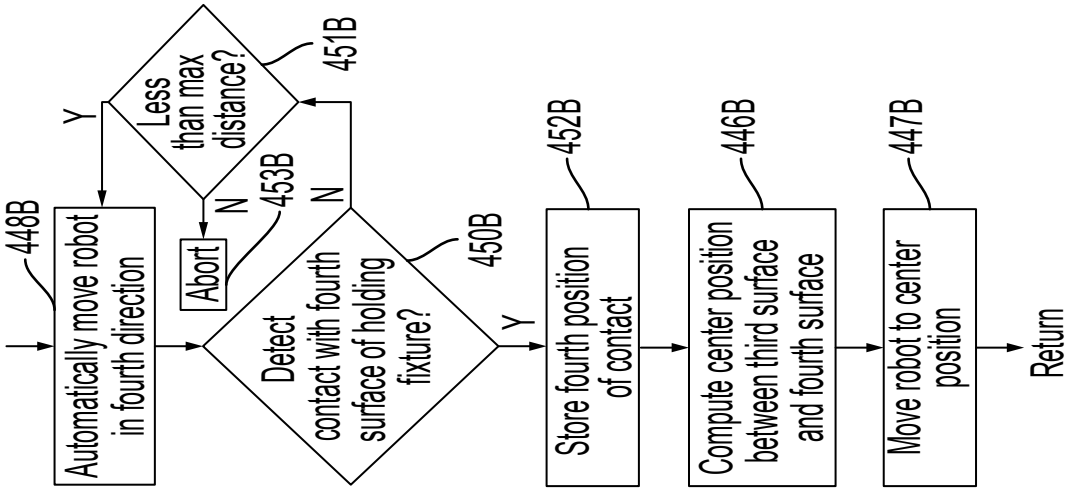
448B
Automatically move robot in fourth direction
Detect contact with fourth surface of holding fixture?
450B
Y
N
Less than max distance?
451B
Y
N
Abort
453B
Store fourth position of contact
452B
Compute center position between third surface and fourth surface
446B
Move robot to center position
447B
Return

FIG. 17

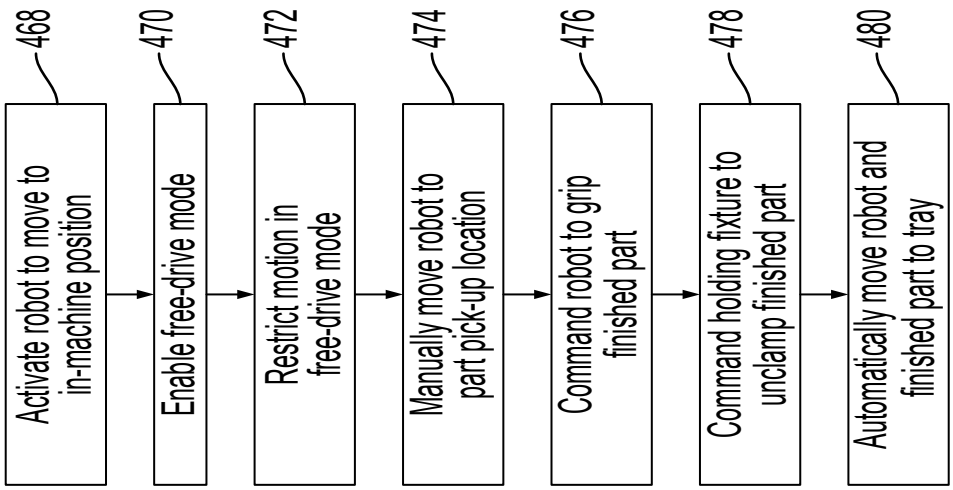
468
Activate robot to move to in-machine position
470
Enable free-drive mode
472
Restrict motion in free-drive mode
474
Manually move robot to part pick-up location
476
Command robot to grip finished part
478
Command holding fixture to unclamp finished part
480
Automatically move robot and finished part to tray

FIG. 18