(12) INTERNATIONAL APPLICATION PUBLISHED UNDER THE PATENT COOPERATION TREATY (PCT)

(19) World Intellectual Property Organization
International Bureau

(43) International Publication Date
19 January 2006 (19.01.2006)

PCT

(10) International Publication Number
WO 2006/006942 A1

(51) International Patent Classification[7]: C02F 1/44

(21) International Application Number:
PCT/SG2005/000233

(22) International Filing Date: 13 July 2005 (13.07.2005)

(25) Filing Language: English

(26) Publication Language: English

(30) Priority Data:
200404298-2 14 July 2004 (14.07.2004) SG

(71) Applicant *(for all designated States except US)*: **TRITECH WATER TECHNOLOGIES PTE LTD** [SG/SG]; 18 Kaki Bukit Road 3, #03-06, Singapore 415978 (SG).

(72) Inventors; and

(75) Inventors/Applicants *(for US only)*: **WANG, Xiaoning** [SG/SG]; Blk 352, Yishun Ring Road #04-1724, Singapore 760352 (SG). **ONG, Soon Leong** [MY/SG]; 177D Jalan Loyang Besar, Singapore 509436 (SG). **CAI, Jungang** [CN/SG]; Blk 358 Bukit Batok Street 31 #11-383, Singapore 650358 (SG).

(74) Agent: **NG, Kim, Tean**; Alain A. Johns Partnership, P.O. Box 1861, Robinson Road Post Office, Singapore 903711 (SG).

(81) Designated States *(unless otherwise indicated, for every kind of national protection available)*: AE, AG, AL, AM, AT, AU, AZ, BA, BB, BG, BR, BW, BY, BZ, CA, CH, CN, CO, CR, CU, CZ, DE, DK, DM, DZ, EC, EE, EG, ES, FI, GB, GD, GE, GH, GM, HR, HU, ID, IL, IN, IS, JP, KE, KG, KM, KP, KR, KZ, LC, LK, LR, LS, LT, LU, LV, MA, MD, MG, MK, MN, MW, MX, MZ, NA, NG, NI, NO, NZ, OM, PG, PH, PL, PT, RO, RU, SC, SD, SE, SG, SK, SL, SM, SY, TJ, TM, TN, TR, TT, TZ, UA, UG, US, UZ, VC, VN, YU, ZA, ZM, ZW.

(84) Designated States *(unless otherwise indicated, for every kind of regional protection available)*: ARIPO (BW, GH, GM, KE, LS, MW, MZ, NA, SD, SL, SZ, TZ, UG, ZM, ZW), Eurasian (AM, AZ, BY, KG, KZ, MD, RU, TJ, TM), European (AT, BE, BG, CH, CY, CZ, DE, DK, EE, ES, FI, FR, GB, GR, HU, IE, IS, IT, LT, LU, LV, MC, NL, PL, PT, RO, SE, SI, SK, TR), OAPI (BF, BJ, CF, CG, CI, CM, GA, GN, GQ, GW, ML, MR, NE, SN, TD, TG).

Published:
— *with international search report*

[Continued on next page]

(54) Title: DESALINATION APPARATUS AND METHOD

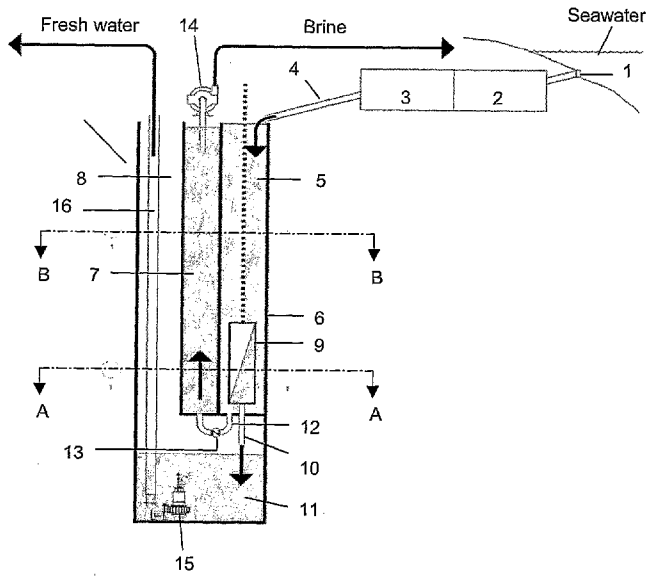

(57) Abstract: The invention discloses a desalination plant that permits the gravitational flow of seawater (1) to be pre-treated (2,3) and subsequently to flow into a unit cell (5) submerged below soil surface. Reverse osmosis desalination units (9) are maintained in each unit cell (5). Reverse osmosis takes place due to hydrostatic pressure difference in the unit cell (5) and the storage reservoir (11) into which the desalinated water flows. The pressure in the storage reservoir (11) is maintained at atmosphere pressure. The desalinated water is pumped out of the storage reservoir (11) and brine water (7) is pumped out from the unit cell (5). A plurality of unit cells (5) can be contained in a large vertical shaft column (6).

WO 2006/006942 A1

For two-letter codes and other abbreviations, refer to the "Guidance Notes on Codes and Abbreviations" appearing at the beginning of each regular issue of the PCT Gazette.