FIG. 1

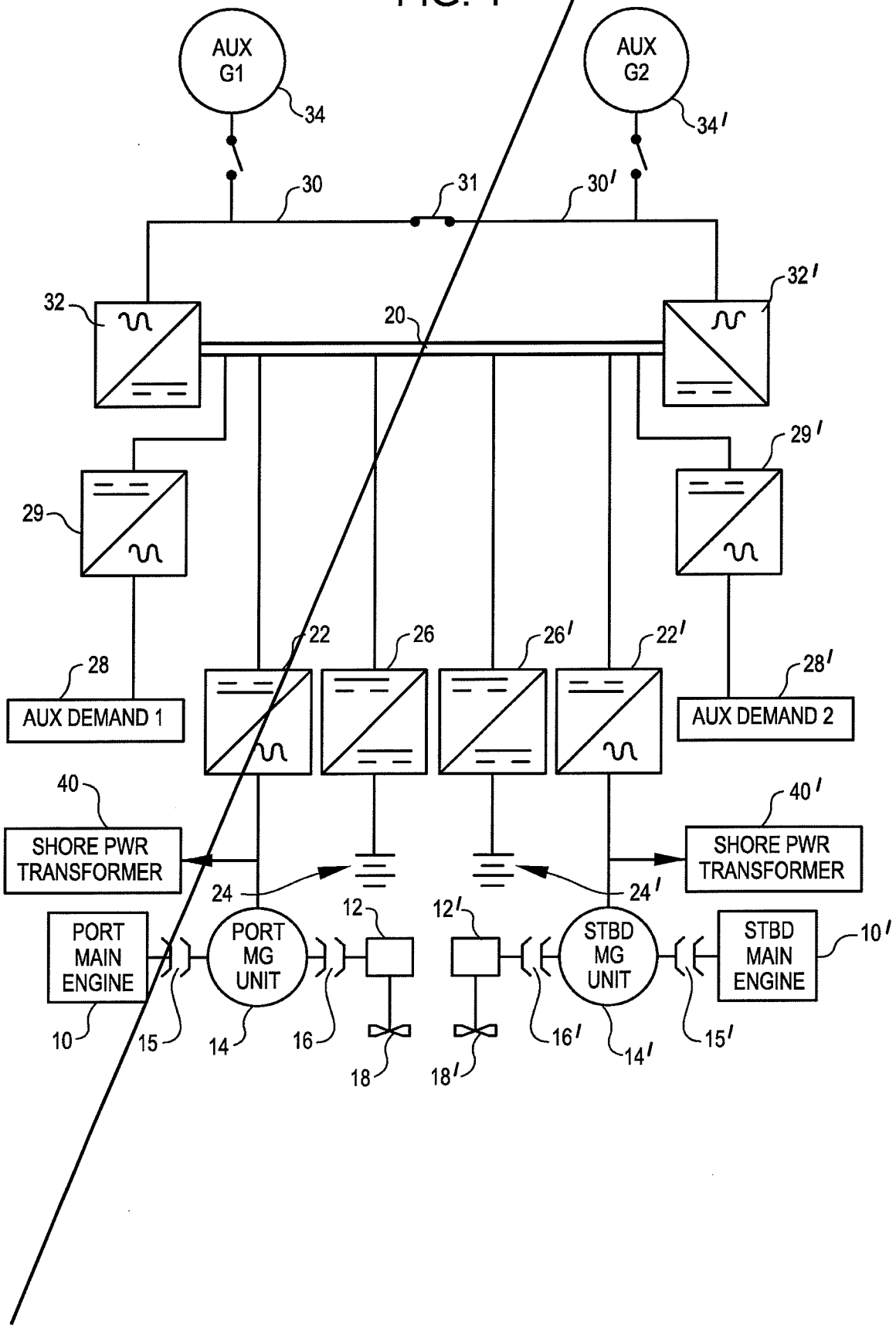
AUX G1
34
AUX G2
34'
30
31
30'
32
32'
20
29
29'
22
26
26'
22'
28
AUX DEMAND 1
28'
AUX DEMAND 2
40
SHORE PWR TRANSFORMER
40'
SHORE PWR TRANSFORMER
24
24'
12
12'
PORT MAIN ENGINE
PORT MG UNIT
STBD MG UNIT
STBD MAIN ENGINE
10
10'
15
15'
14
14'
16
16'
18
18'

FIG. 2A

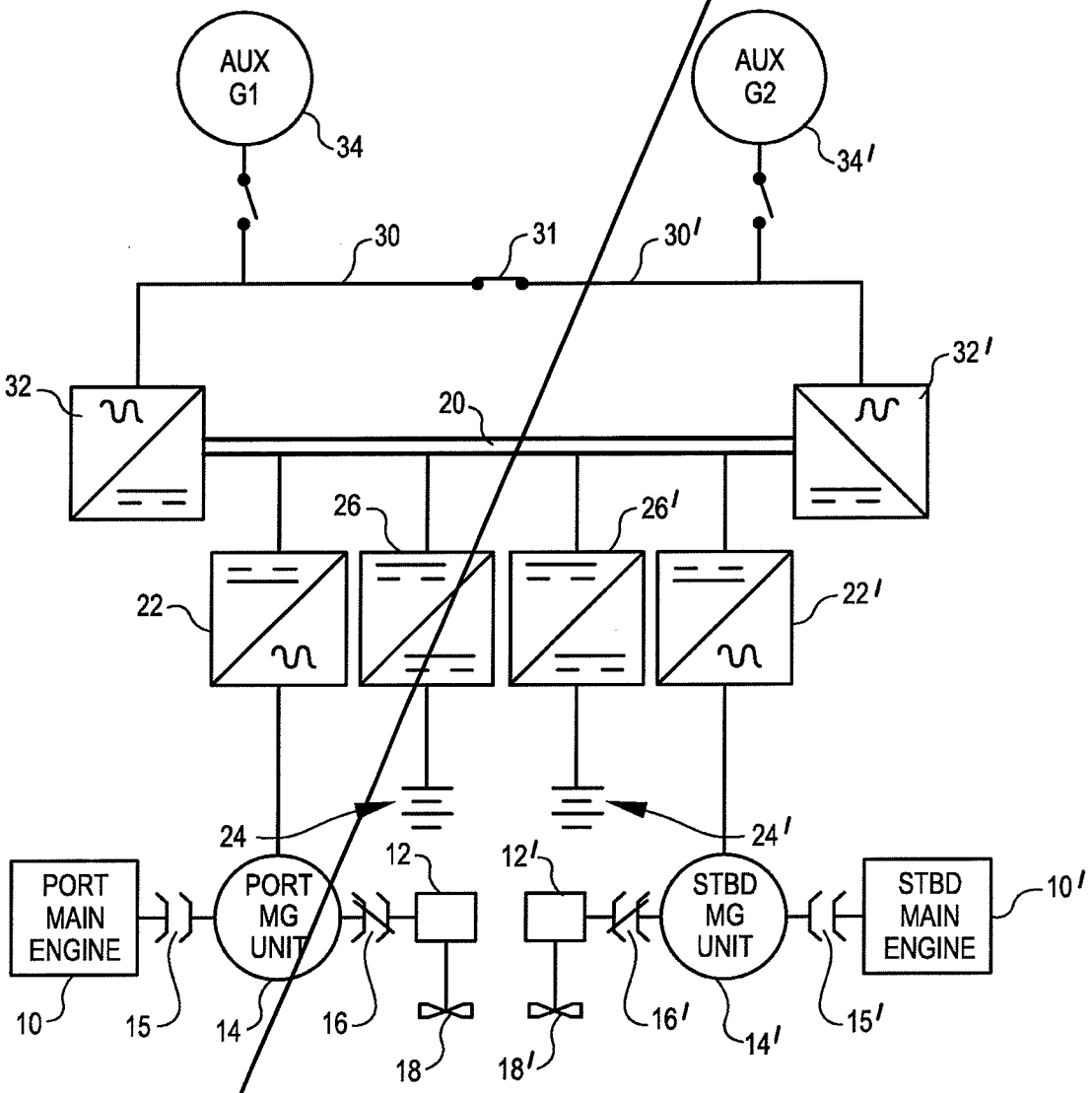
AUX G1
34
AUX G2
34'
30
31
30'
32
32'
20
26
26'
22
22'
24
24'
12
12'
PORT MAIN ENGINE
PORT MG UNIT
STBD MG UNIT
STBD MAIN ENGINE
10
10'
15
14
16
18
16'
18'
14'
15'

FIG. 2B

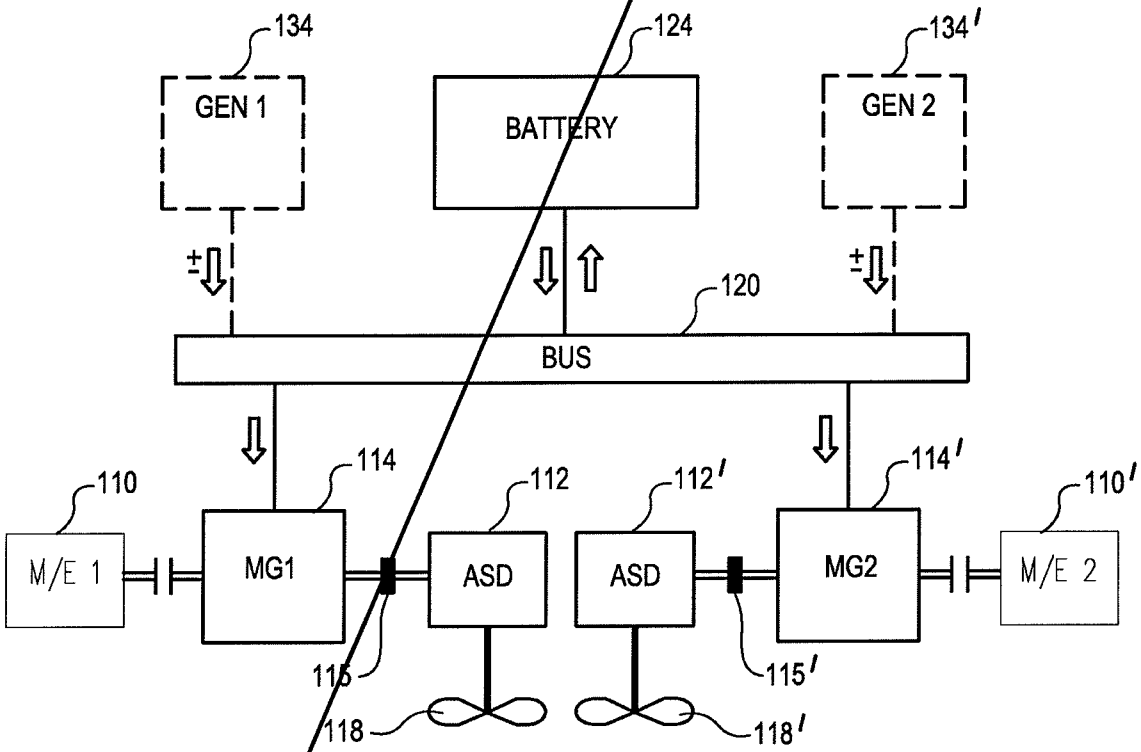
134
GEN 1
124
BATTERY
134'
GEN 2
120
BUS
110
M/E 1
114
MG1
112
ASD
112'
ASD
114'
MG2
110'
M/E 2
115
115'
118
118'

FIG. 3A

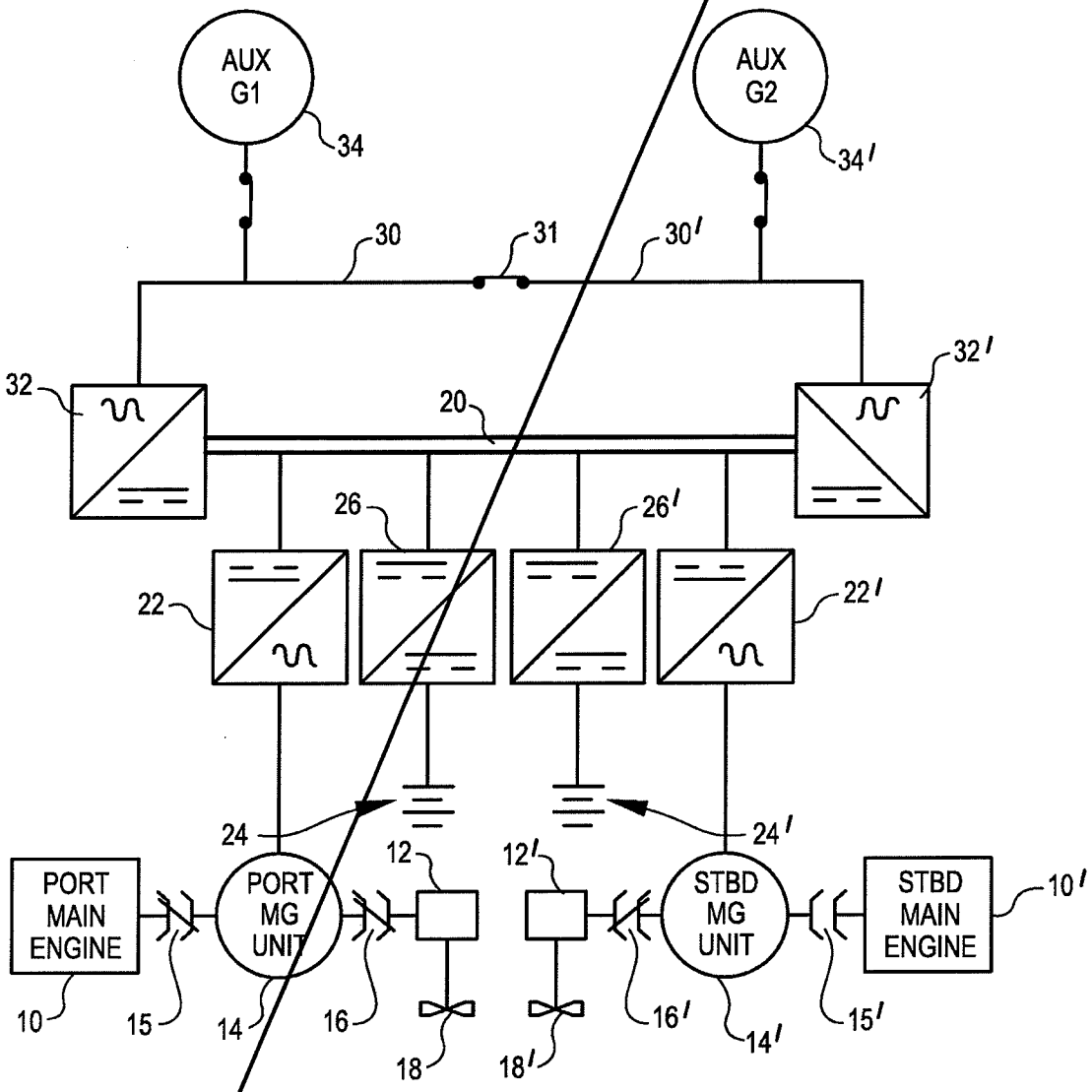
AUX G1
34
AUX G2
34'
30
31
30'
32
32'
20
26
26'
22
22'
24
24'
12
12'
PORT MAIN ENGINE
PORT MG UNIT
STBD MG UNIT
STBD MAIN ENGINE
10
10'
15
15'
14
14'
16
16'
18
18'

FIG. 3B

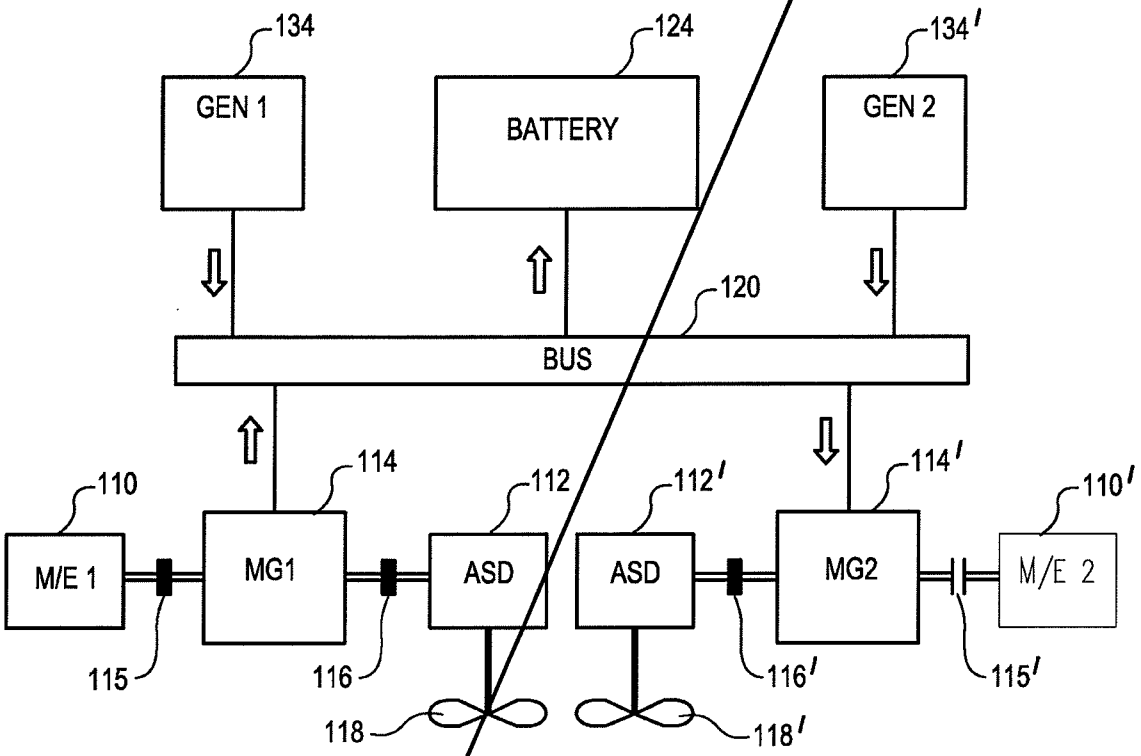
134
GEN 1
124
BATTERY
134'
GEN 2
120
BUS
110
M/E 1
114
MG1
112
ASD
112'
ASD
114'
MG2
110'
M/E 2
115
116
118
116'
118'
115'

FIG. 4A

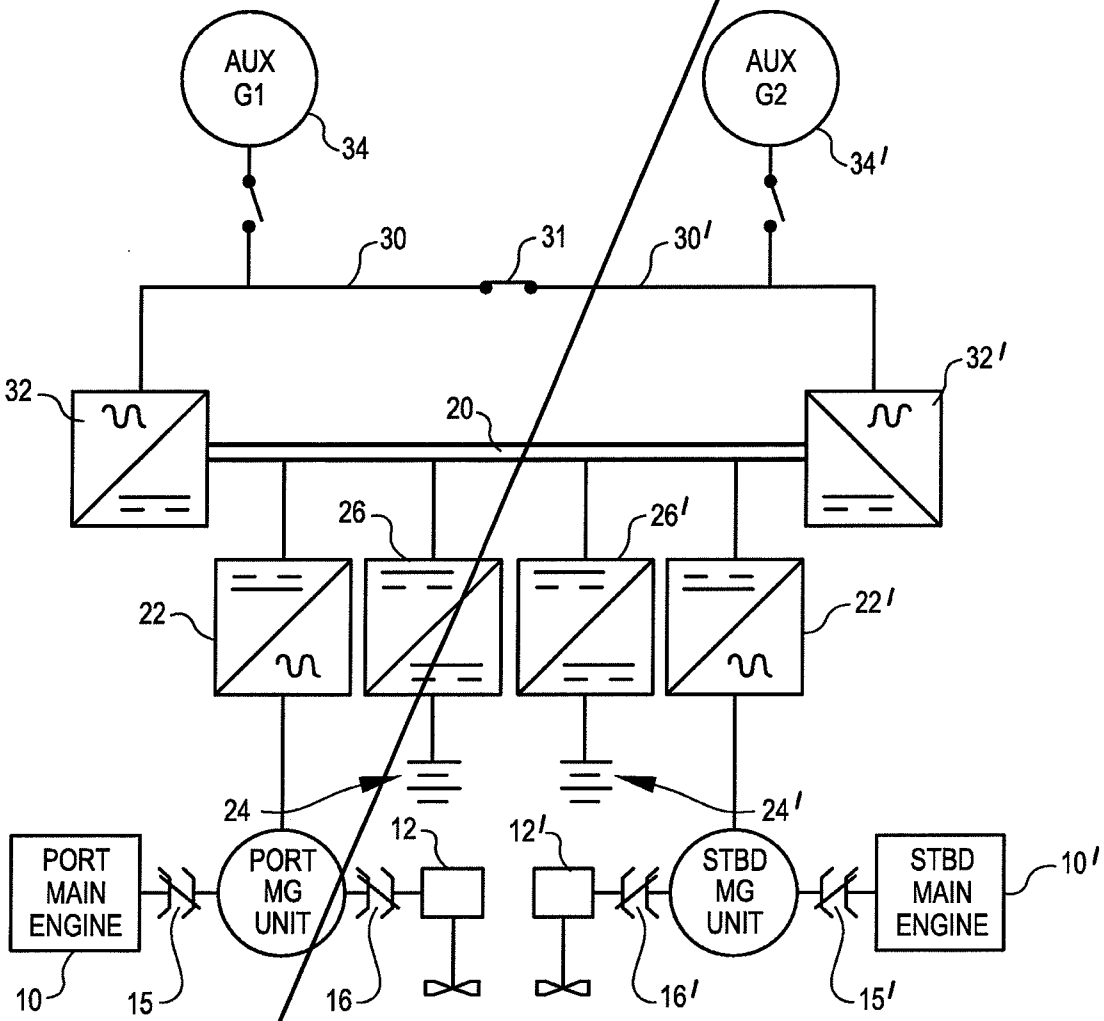
AUX G1
34
AUX G2
34'
30
31
30'
32
32'
20
26
26'
22
22'
24
24'
12
12'
PORT MAIN ENGINE
PORT MG UNIT
STBD MG UNIT
STBD MAIN ENGINE
10
10'
15
15'
16
16'

FIG. 4B

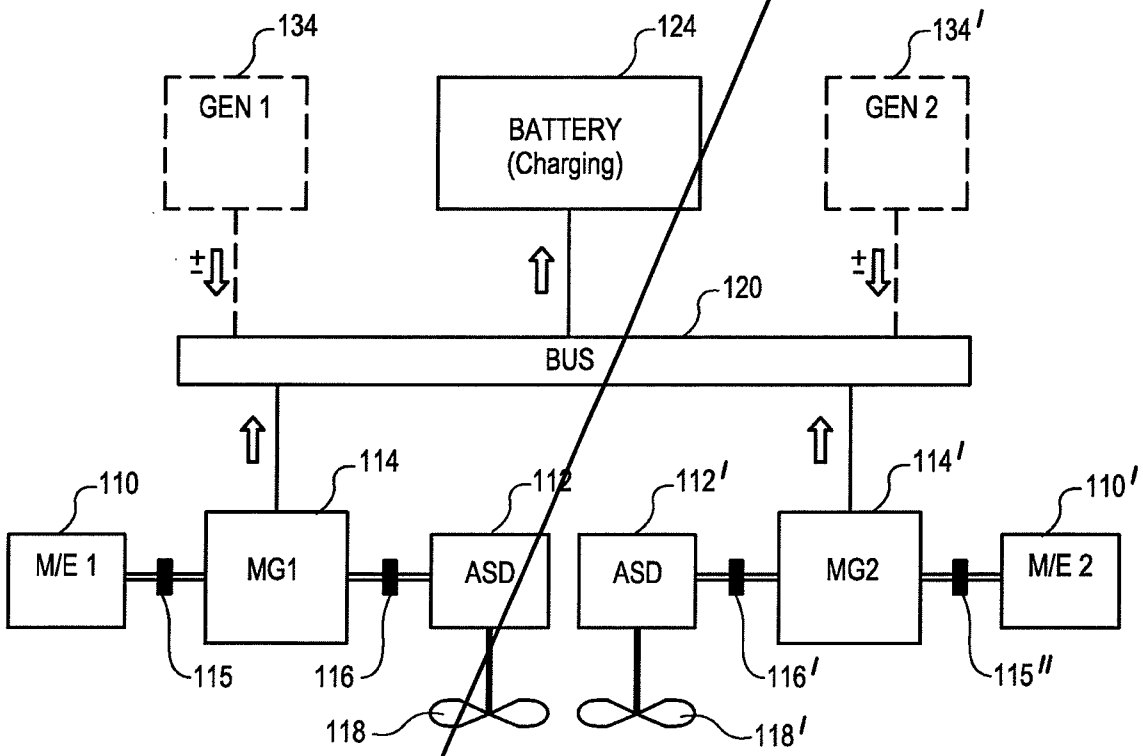
134
GEN 1
124
BATTERY
(Charging)
134'
GEN 2
±
±
120
BUS
110
M/E 1
114
MG1
112
ASD
112'
ASD
114'
MG2
110'
M/E 2
115
116
118
116'
118'
115"

FIG. 5A

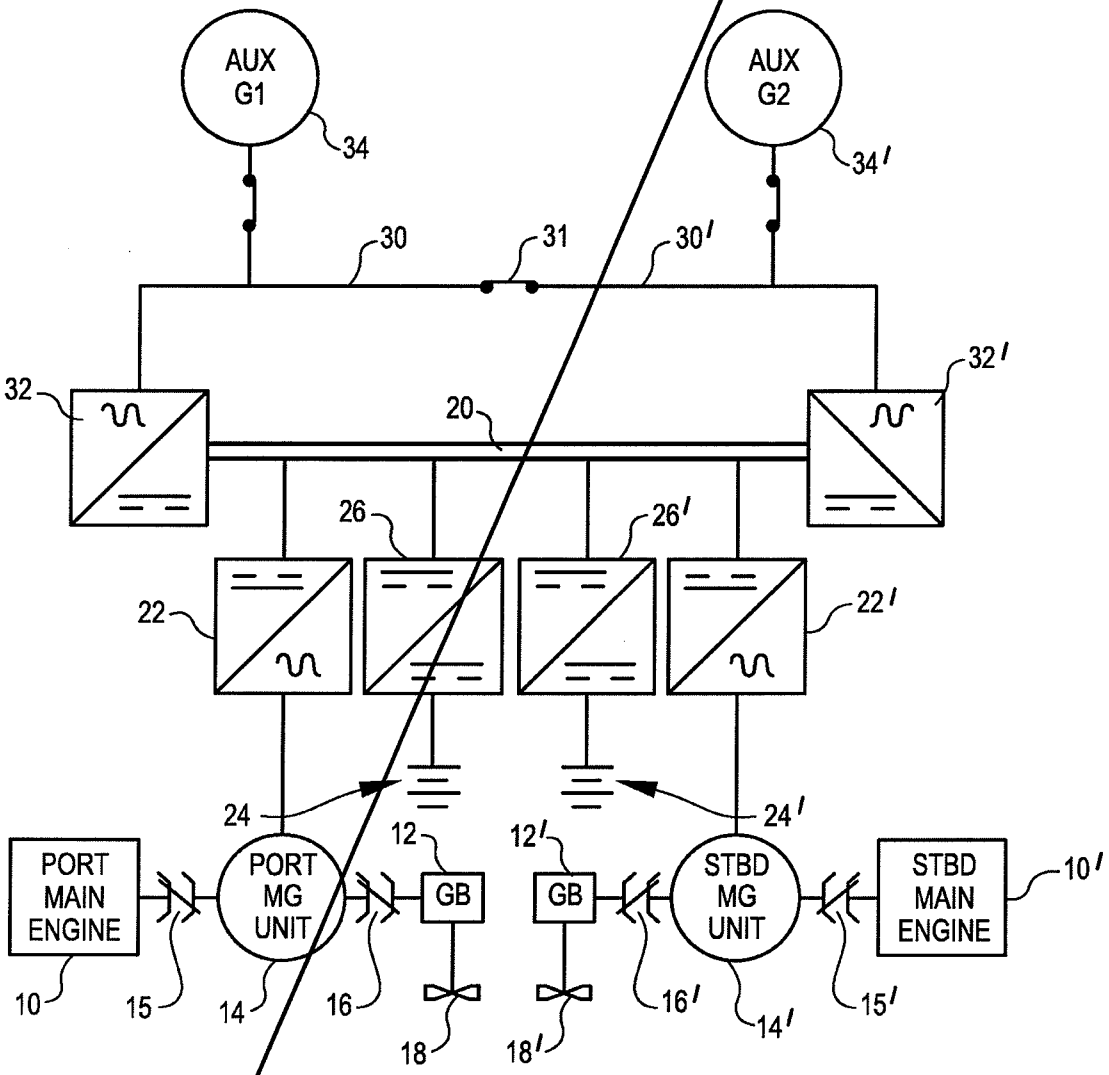
AUX G1
34
AUX G2
34'
30
31
30'
32
32'
20
26
26'
22
22'
24
24'
12
12'
PORT MAIN ENGINE
PORT MG UNIT
GB
GB
STBD MG UNIT
STBD MAIN ENGINE
10'
10
15
14
16
18
18'
16'
14'
15'

FIG. 5B

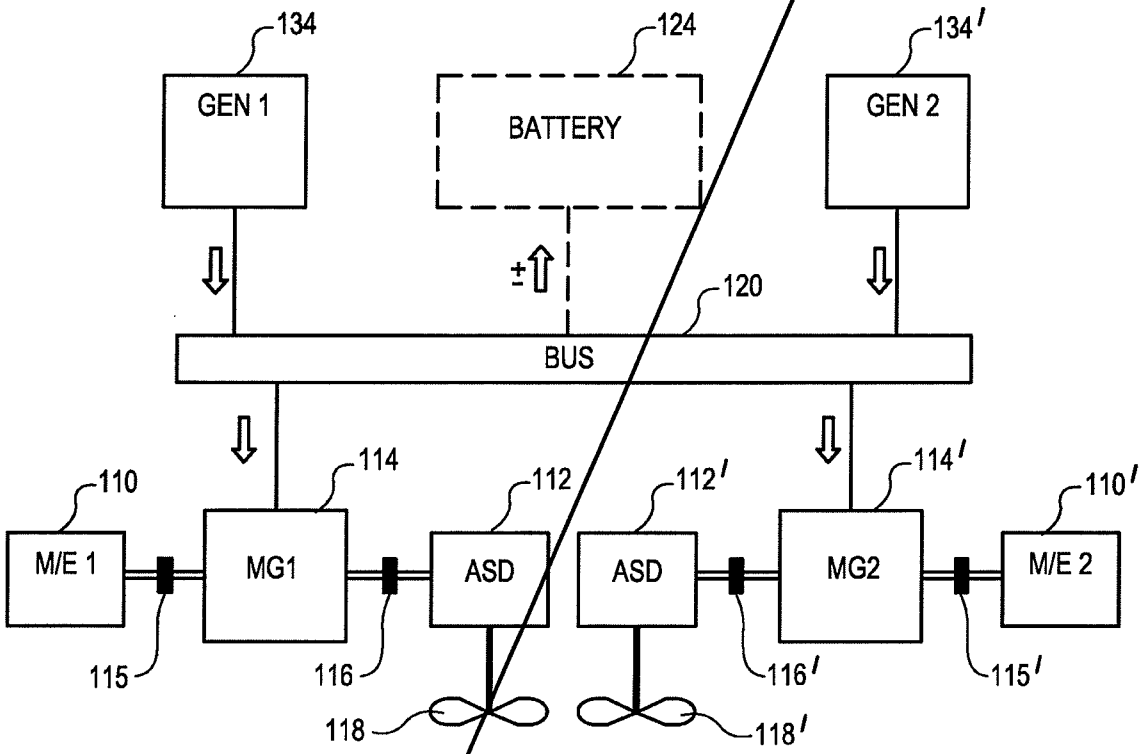
134
GEN 1
124
BATTERY
134'
GEN 2
120
BUS
110
M/E 1
114
MG1
112
ASD
112'
ASD
114'
MG2
110'
M/E 2
115
116
118
116'
118'
115'

FIG. 5C

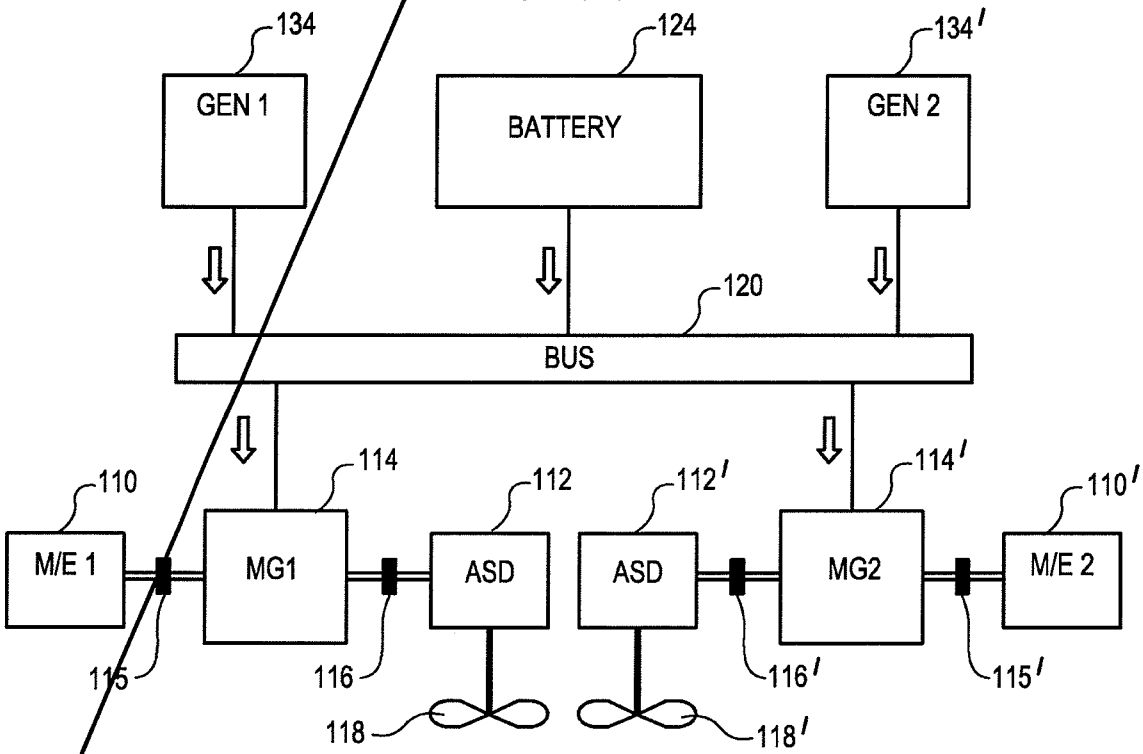
134
GEN 1
124
BATTERY
134'
GEN 2
120
BUS
110
M/E 1
114
MG1
112
ASD
112'
ASD
114'
MG2
110'
M/E 2
115
116
118
116'
118'
115'

FIG. 1

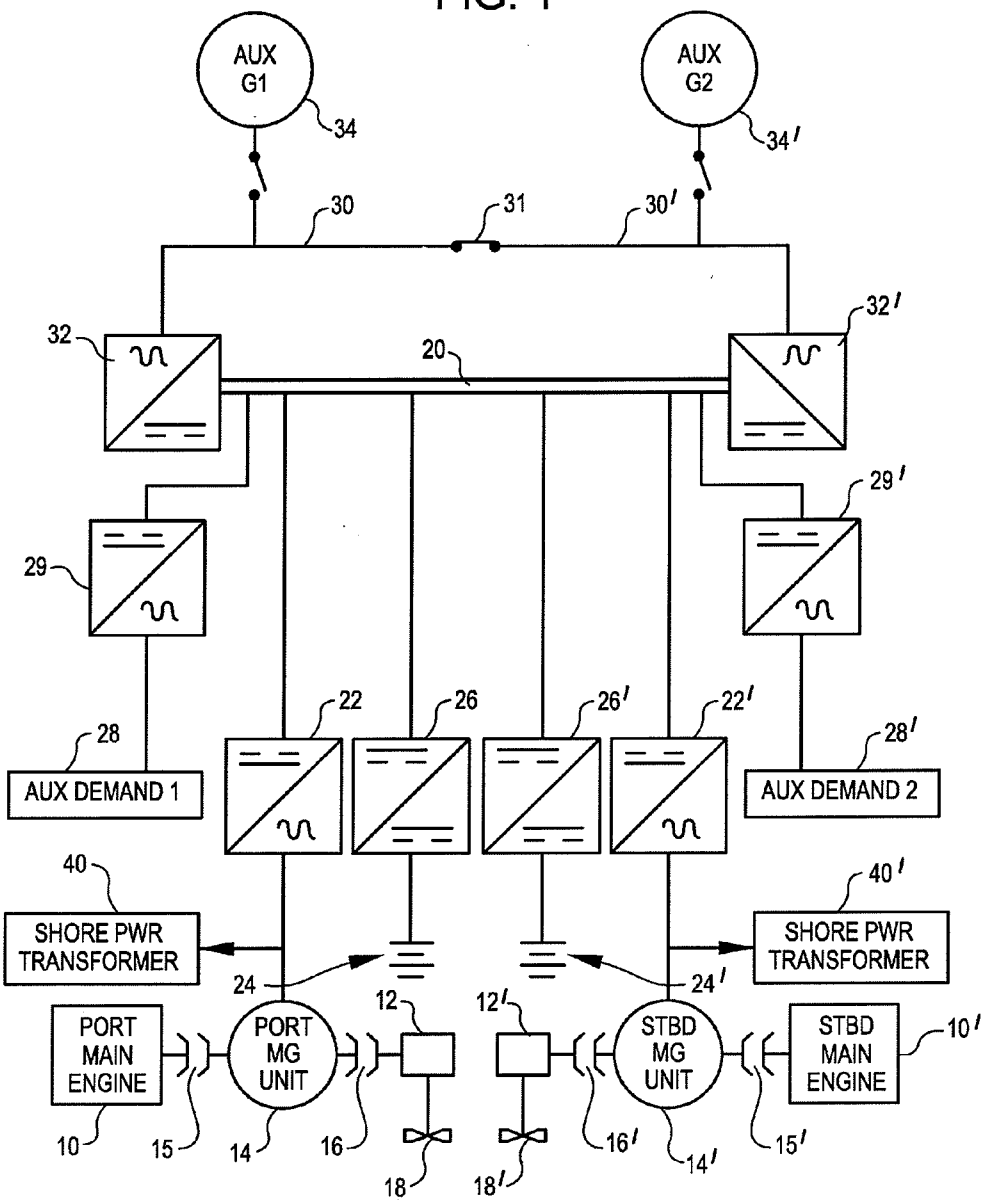
AUX G1
34
AUX G2
34'
30
31
30'
32
32'
20
29
29'
28
AUX DEMAND 1
22
26
26'
22'
28'
AUX DEMAND 2
40
SHORE PWR TRANSFORMER
40'
SHORE PWR TRANSFORMER
24
24'
12
12'
PORT MAIN ENGINE
PORT MG UNIT
STBD MG UNIT
STBD MAIN ENGINE
10
10'
15
15'
14
14'
16
16'
18
18'

FIG. 2A

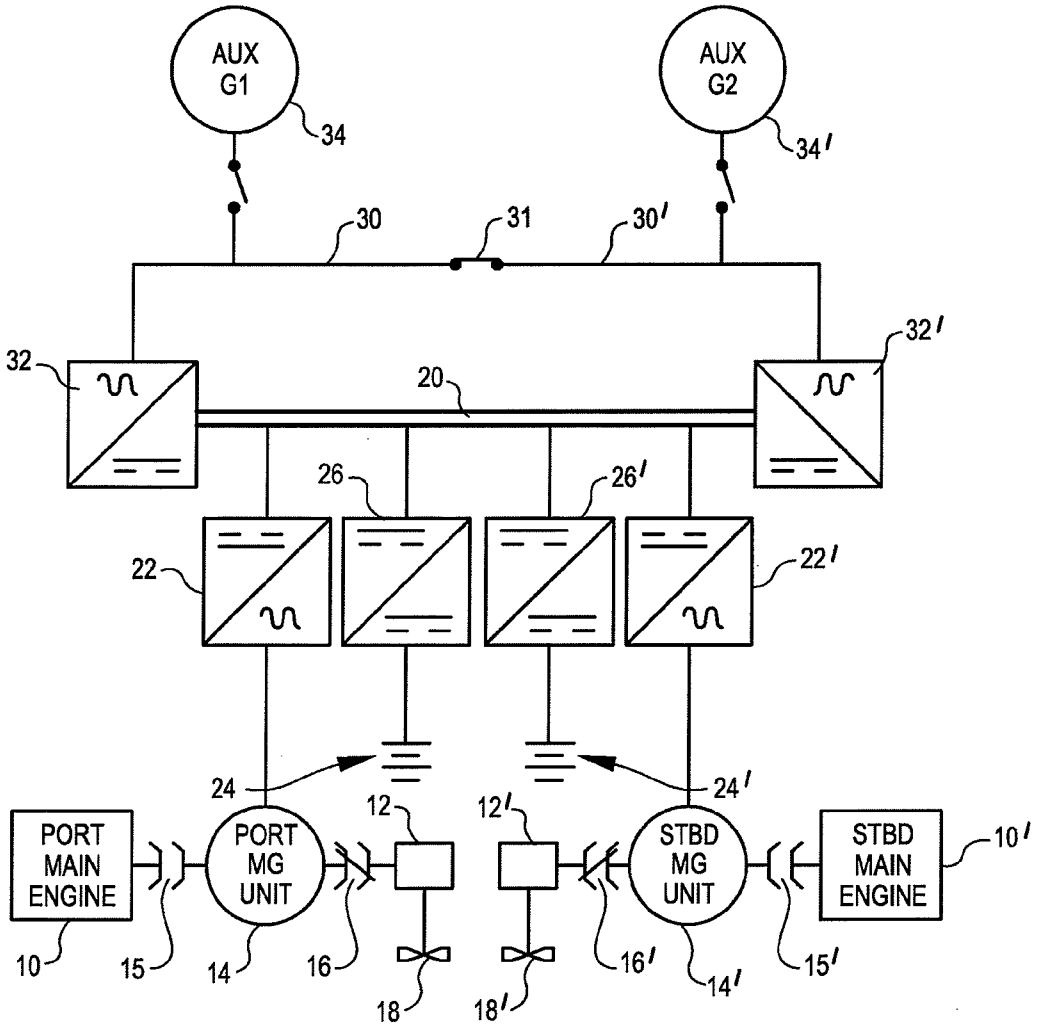
AUX G1
34
AUX G2
34'
30
31
30'
32
32'
20
26
26'
22
22'
24
24'
12
12'
PORT MAIN ENGINE
PORT MG UNIT
STBD MG UNIT
STBD MAIN ENGINE
10
10'
15
15'
14
14'
16
16'
18
18'

FIG. 2B

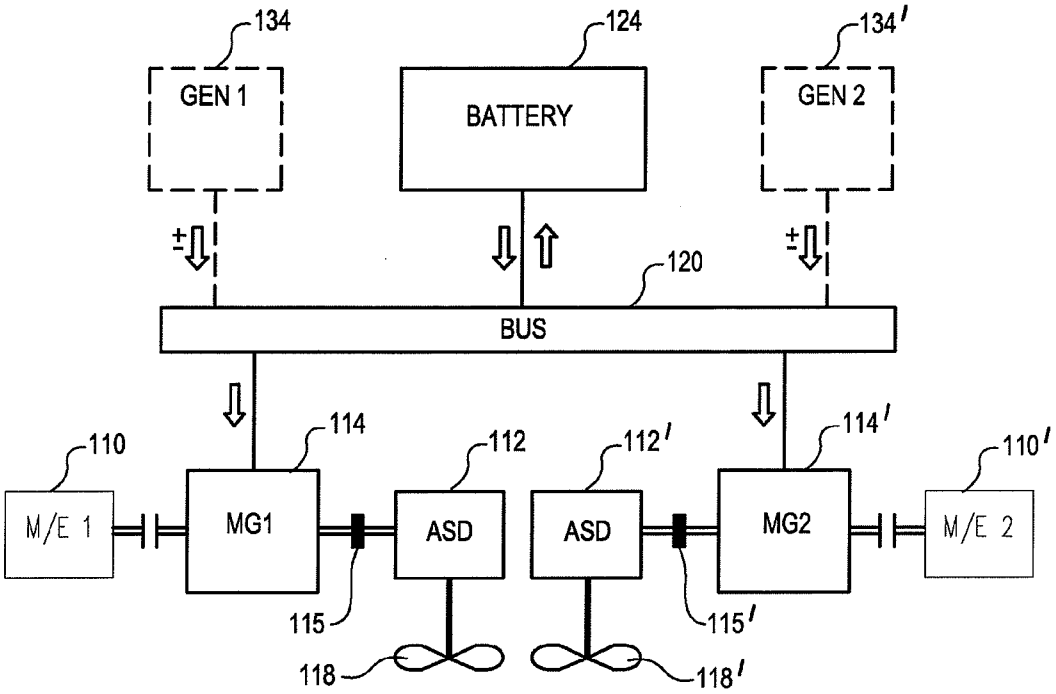
134
GEN 1
124
BATTERY
134'
GEN 2
±
±
120
BUS
110
M/E 1
114
MG1
112
ASD
115
118
112'
ASD
114'
MG2
115'
118'
110'
M/E 2

FIG. 3A

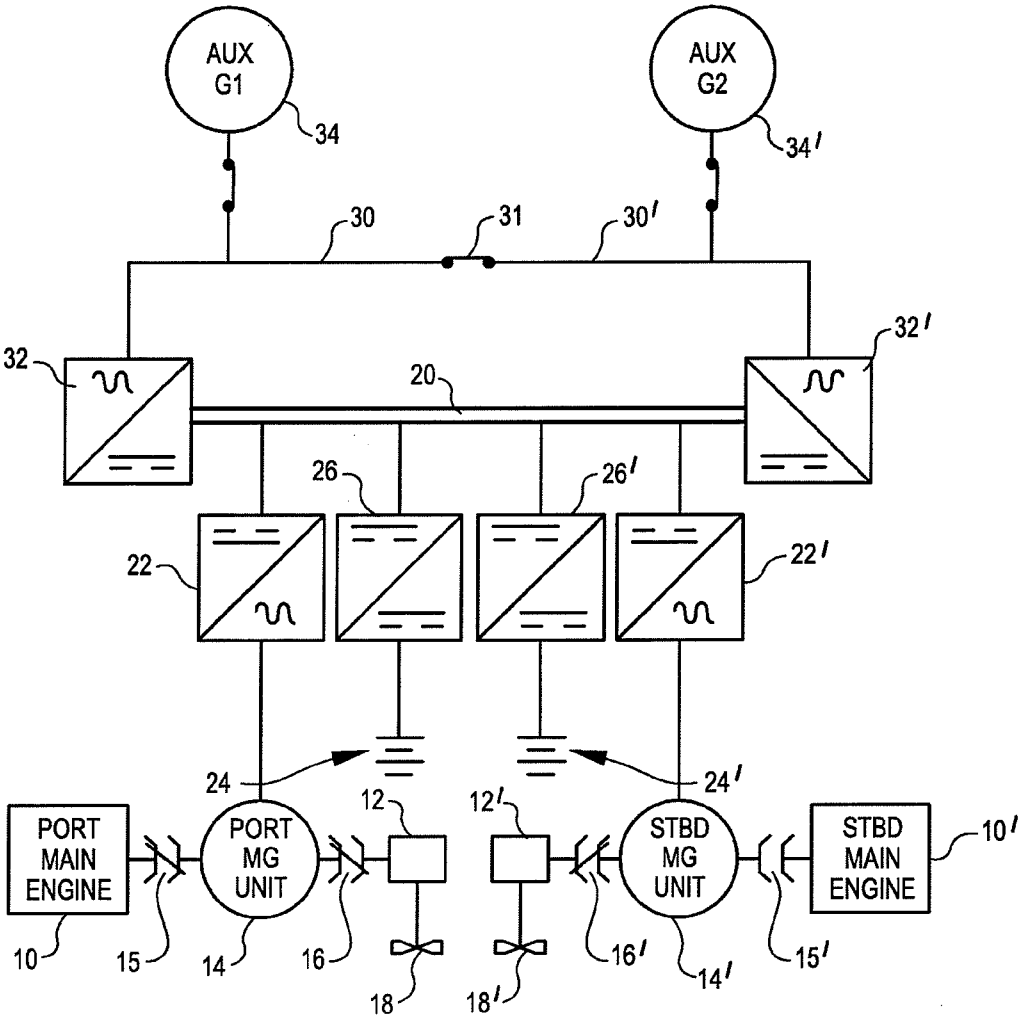
AUX G1
34
AUX G2
34'
30
31
30'
32
32'
20
26
26'
22
22'
24
24'
12
12'
PORT MAIN ENGINE
PORT MG UNIT
STBD MG UNIT
STBD MAIN ENGINE
10
10'
15
15'
14
14'
16
16'
18
18'

FIG. 3B

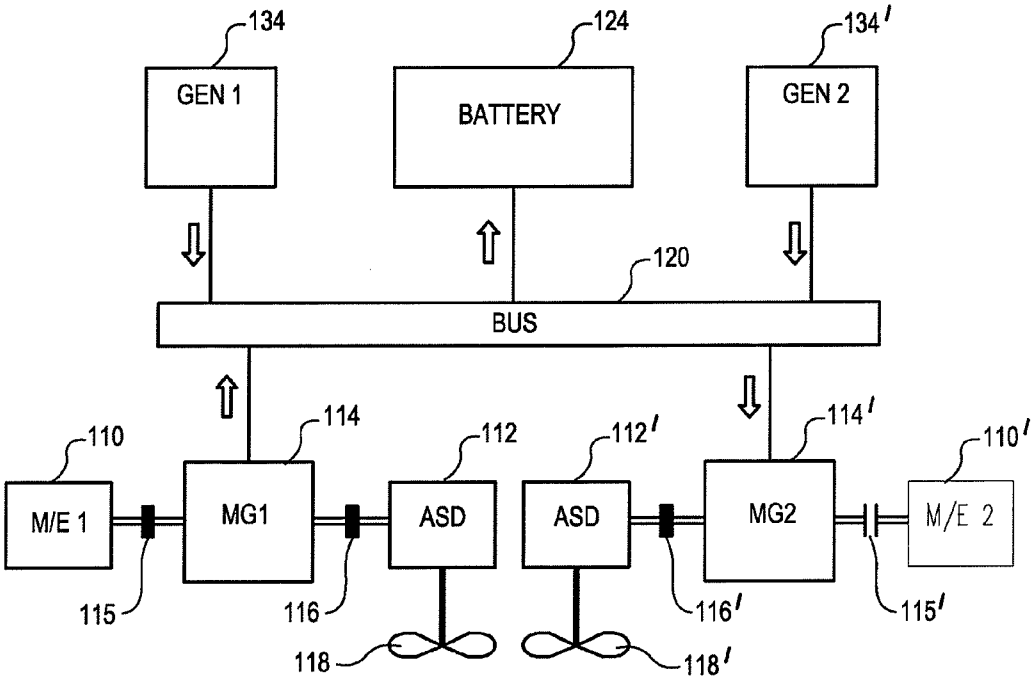
134
GEN 1
124
BATTERY
134'
GEN 2
120
BUS
110
M/E 1
114
MG1
112
ASD
112'
ASD
114'
MG2
110'
M/E 2
115
116
118
116'
118'
115'

FIG. 4A

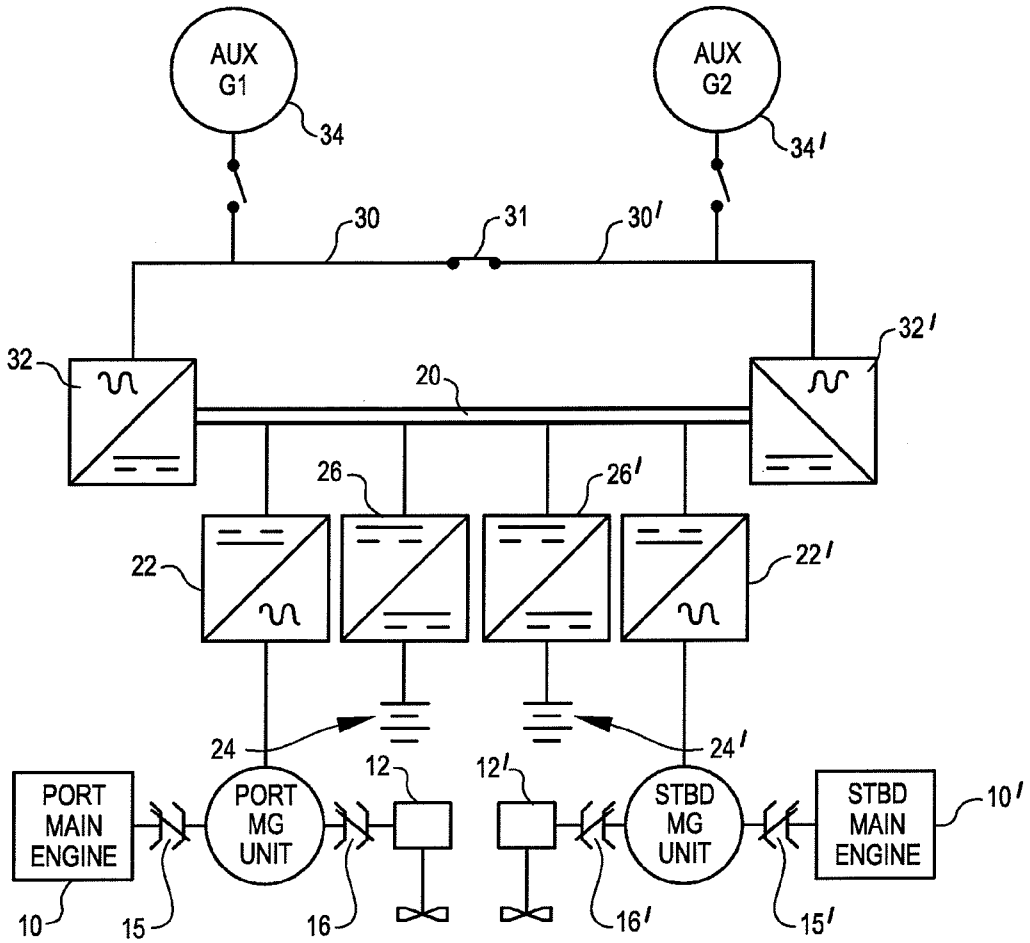
AUX G1
34
AUX G2
34'
30
31
30'
32
32'
20
26
26'
22
22'
24
24'
12
12'
PORT MAIN ENGINE
PORT MG UNIT
STBD MG UNIT
STBD MAIN ENGINE
10
10'
15
15'
16
16'

FIG. 4B

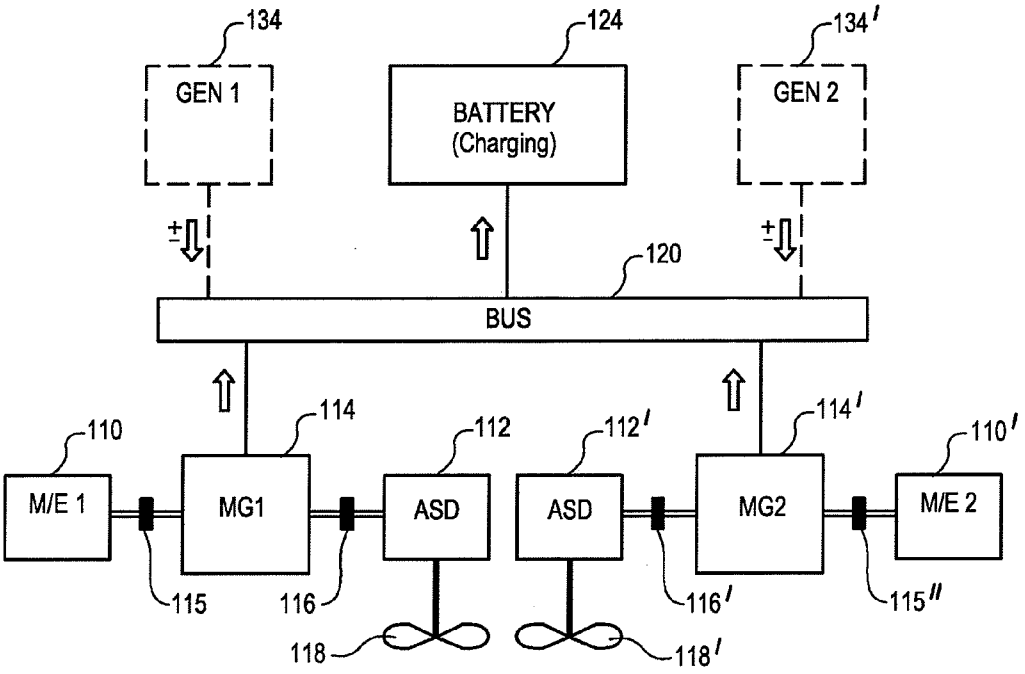
134
GEN 1
124
BATTERY
(Charging)
134'
GEN 2
120
BUS
110
M/E 1
114
MG1
112
ASD
112'
ASD
114'
MG2
110'
M/E 2
115
116
118
116'
118'
115"

FIG. 5A

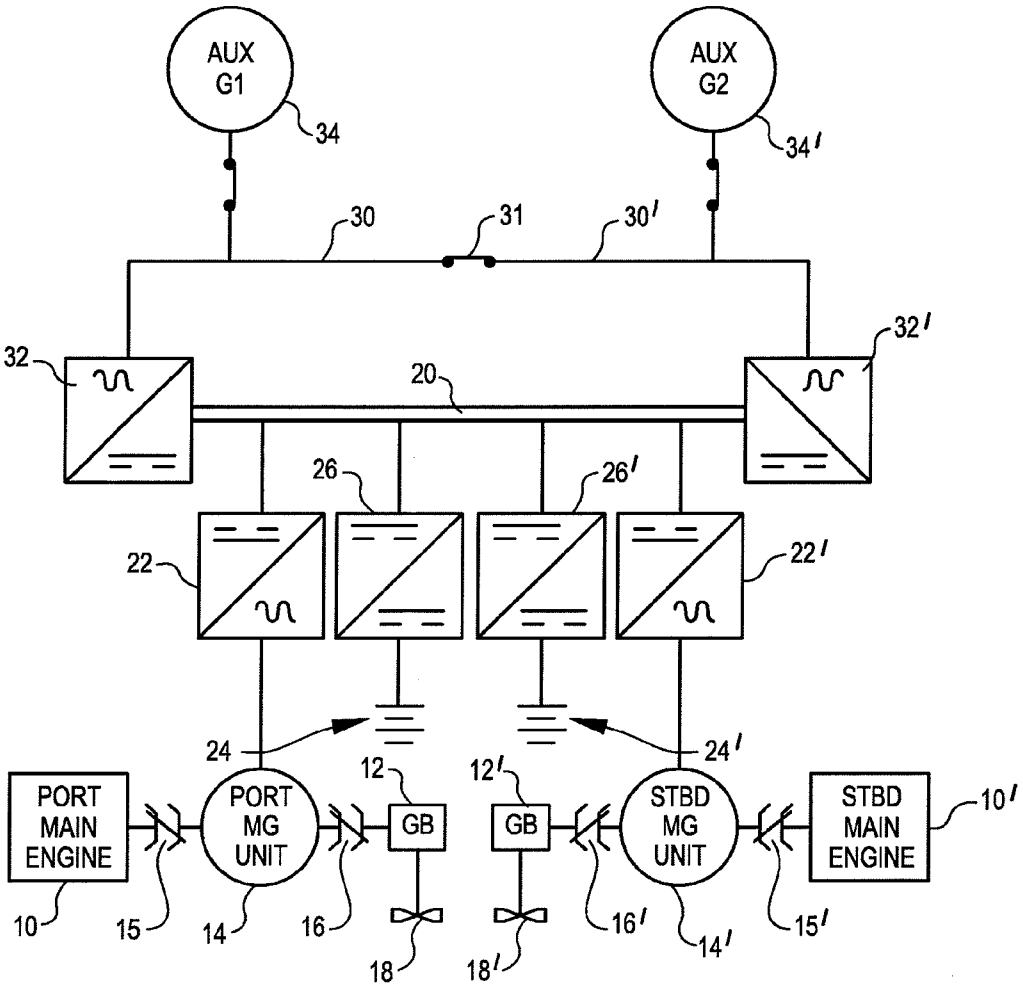
AUX G1
34
AUX G2
34'
30
31
30'
32
32'
20
26
26'
22
22'
24
24'
12
12'
PORT MAIN ENGINE
PORT MG UNIT
GB
GB
STBD MG UNIT
STBD MAIN ENGINE
10'
10
15
14
16
18
18'
16'
14'
15'

FIG. 5B

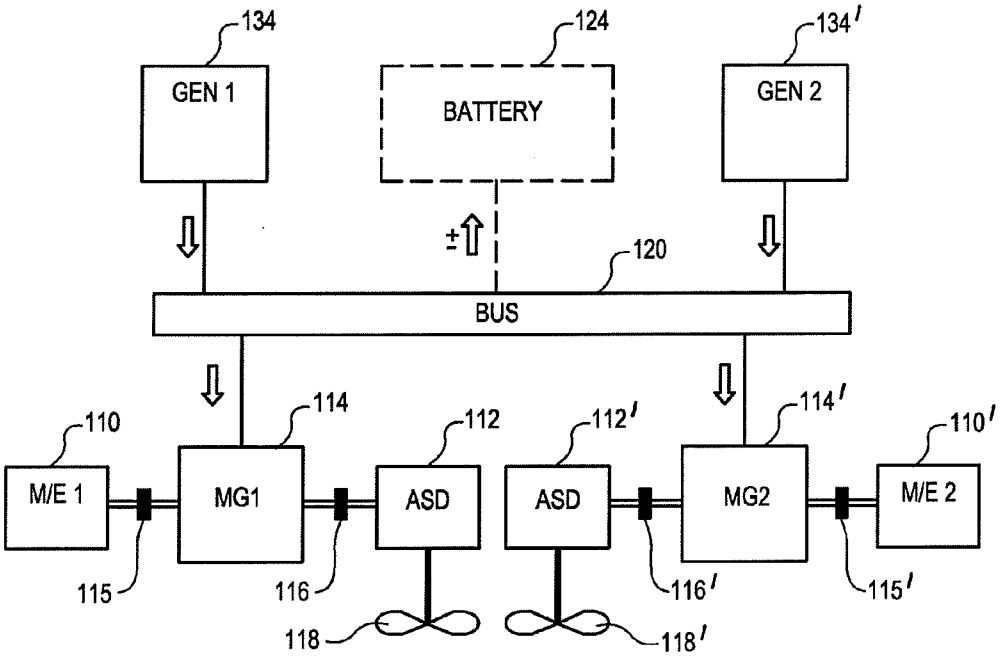
134
GEN 1
124
BATTERY
134'
GEN 2
120
BUS
110
M/E 1
114
MG1
112
ASD
112'
ASD
114'
MG2
110'
M/E 2
115
116
118
116'
118'
115'

FIG. 5C

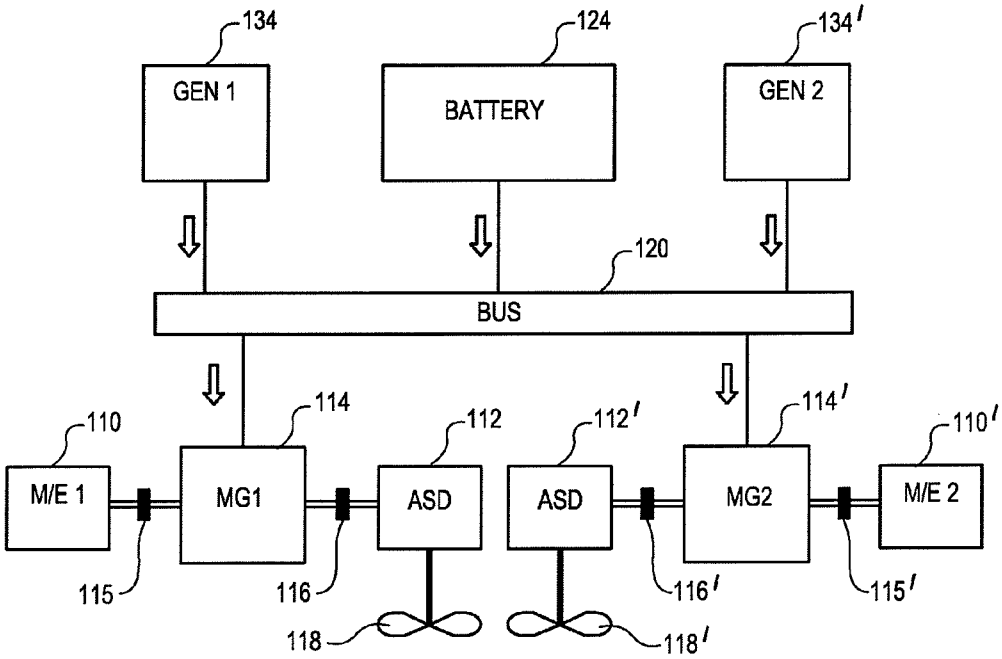
134
GEN 1
124
BATTERY
134'
GEN 2
120
BUS
110
M/E 1
114
MG1
112
ASD
112'
ASD
114'
MG2
110'
M/E 2
115
116
118
116'
118'
115'