

FIG. 1 (Prior Art)

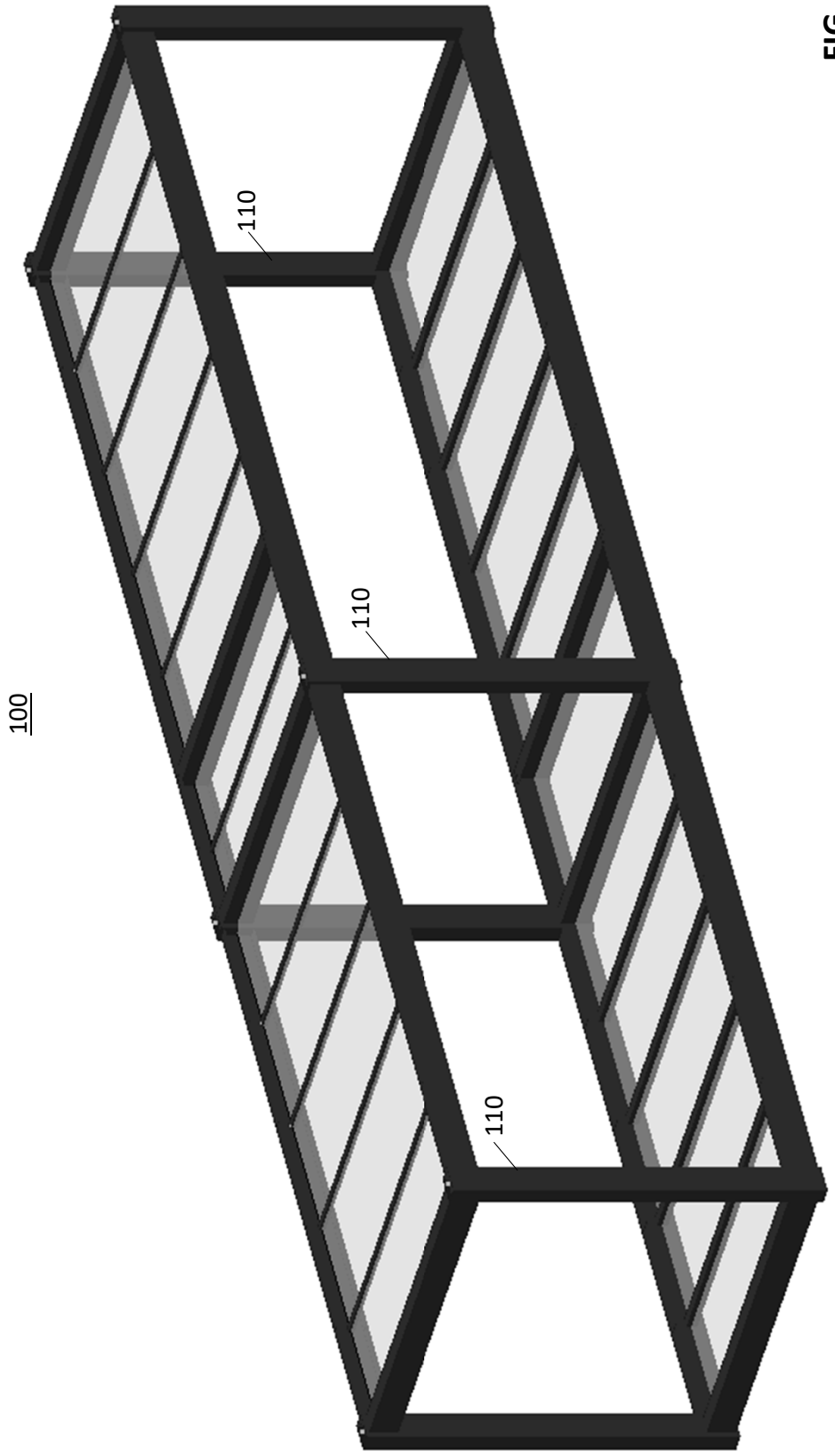

FIG. 2

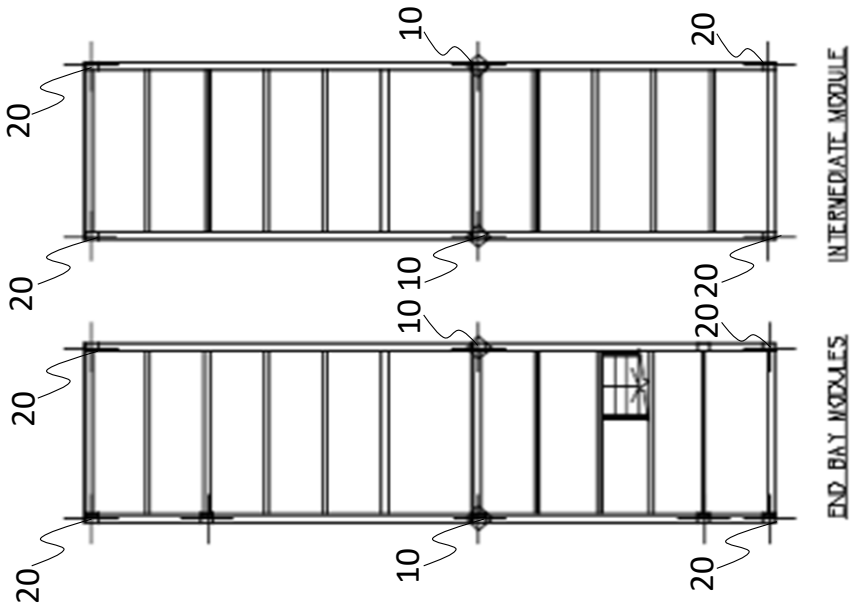
10
20
20
20
10
10
20
20
INTERMEDIATE MODULE
10
20
20
20
10
20
END BAY MODULES

FIG. 3

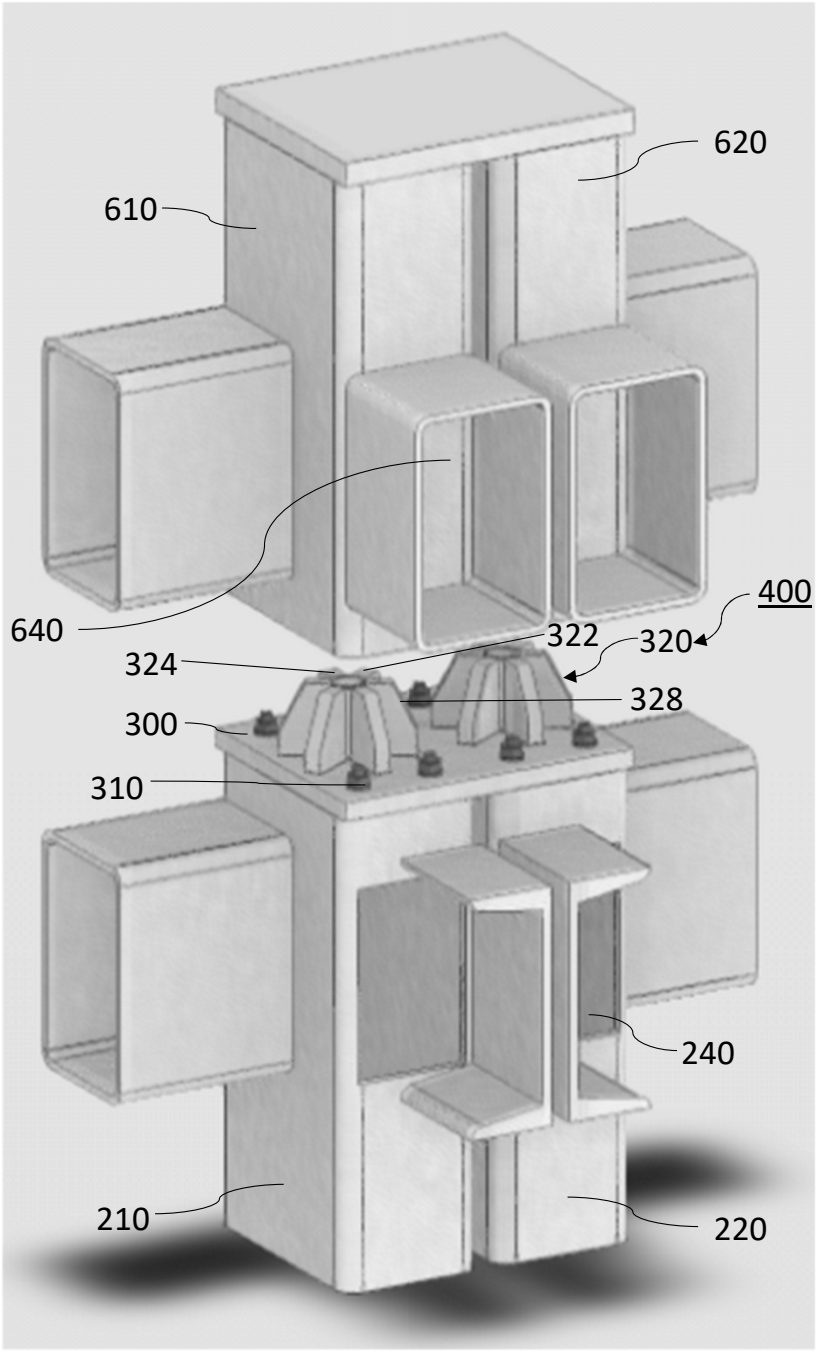

FIG. 4

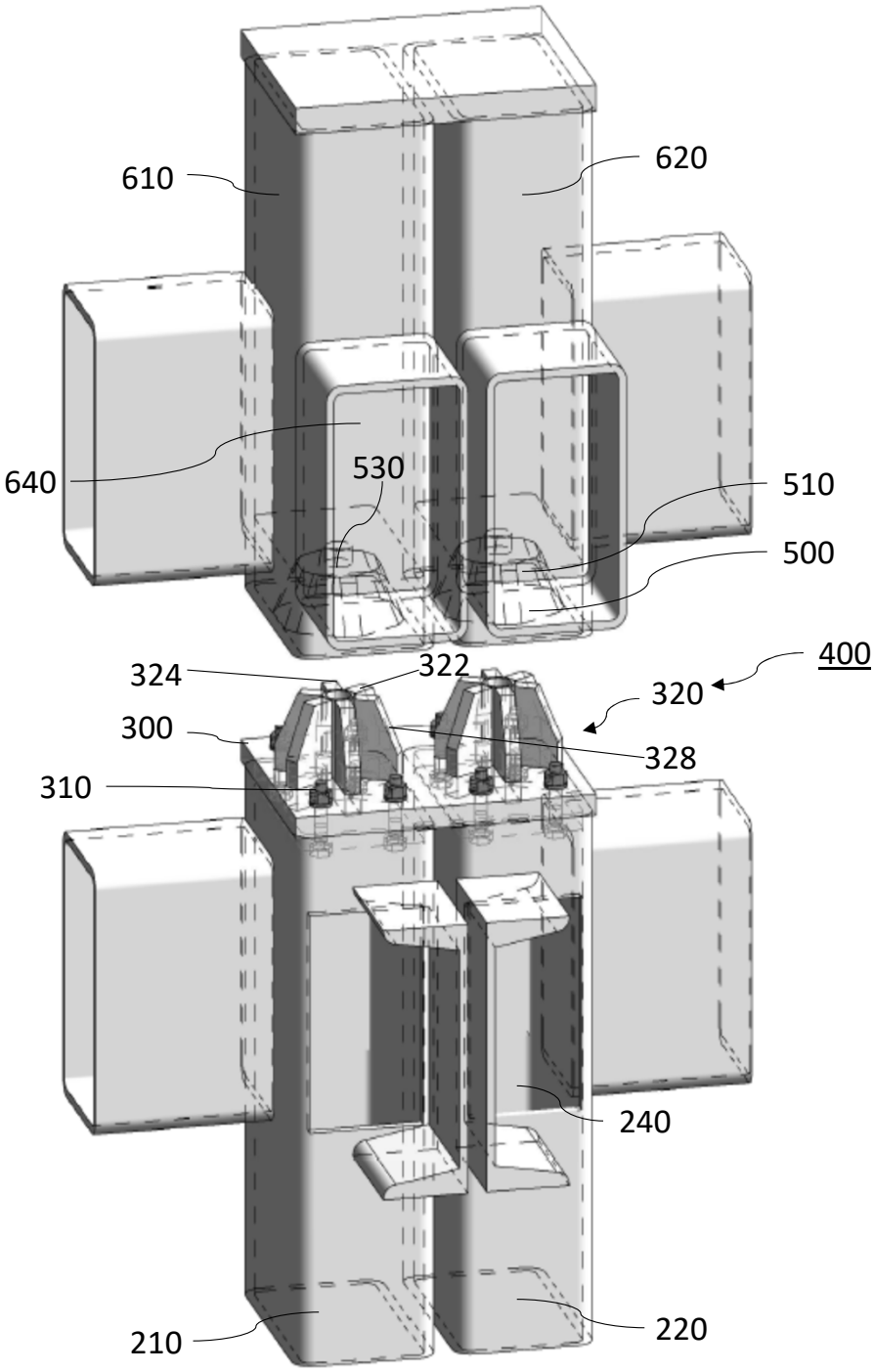

FIG. 4(a)

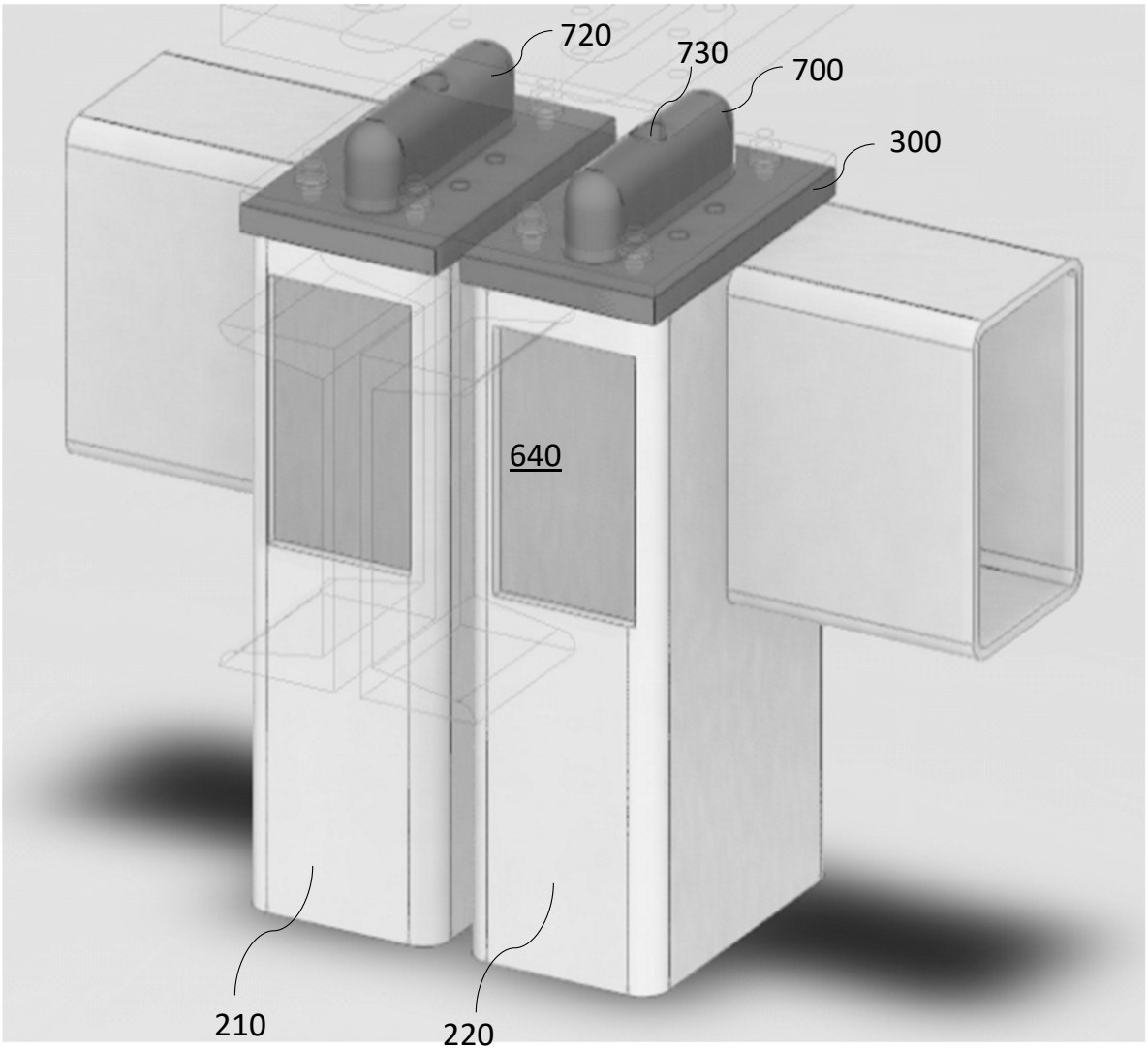

FIG. 5

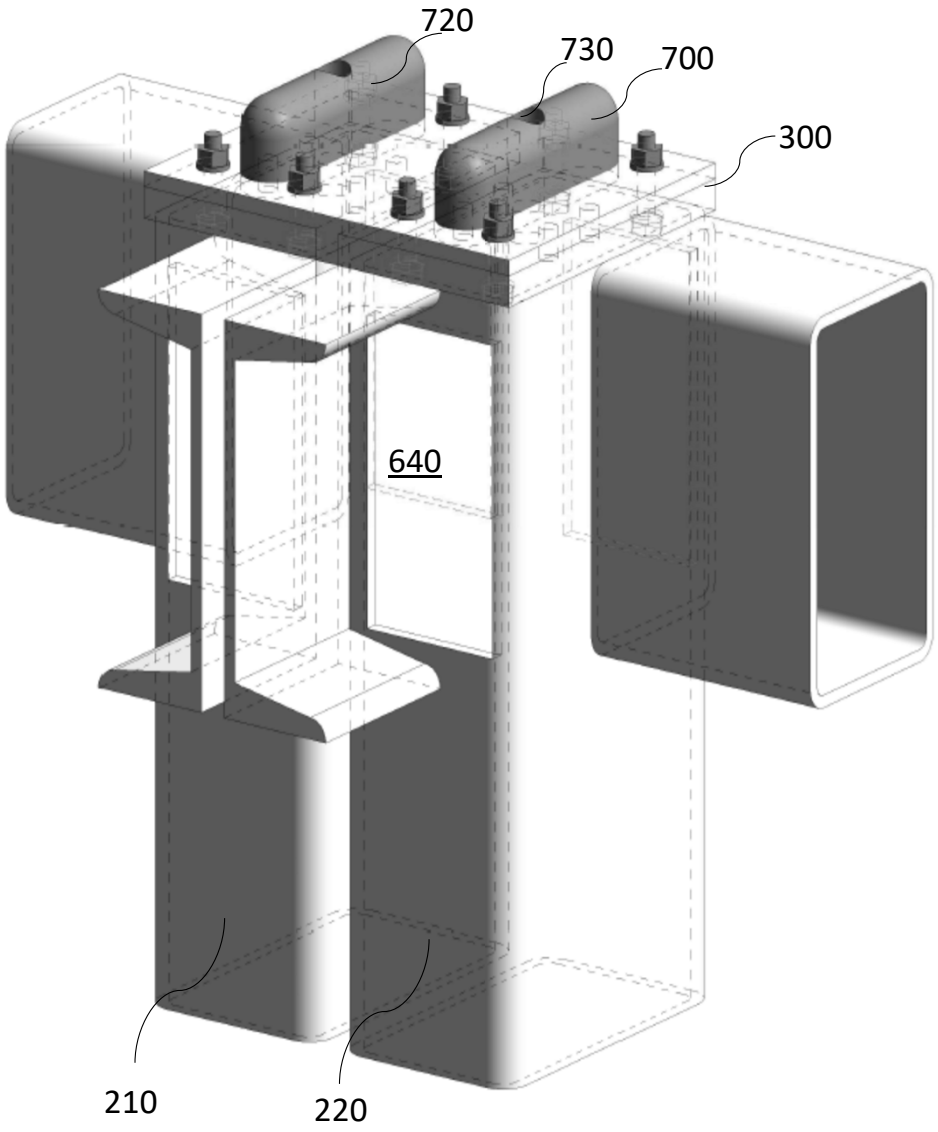

FIG. 5(a)

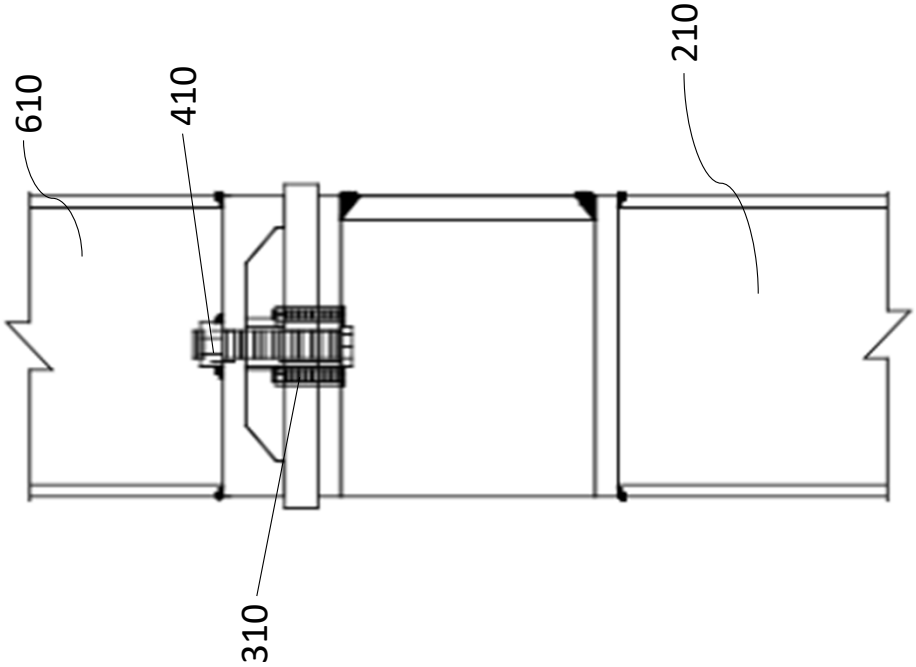

FIG. 6B

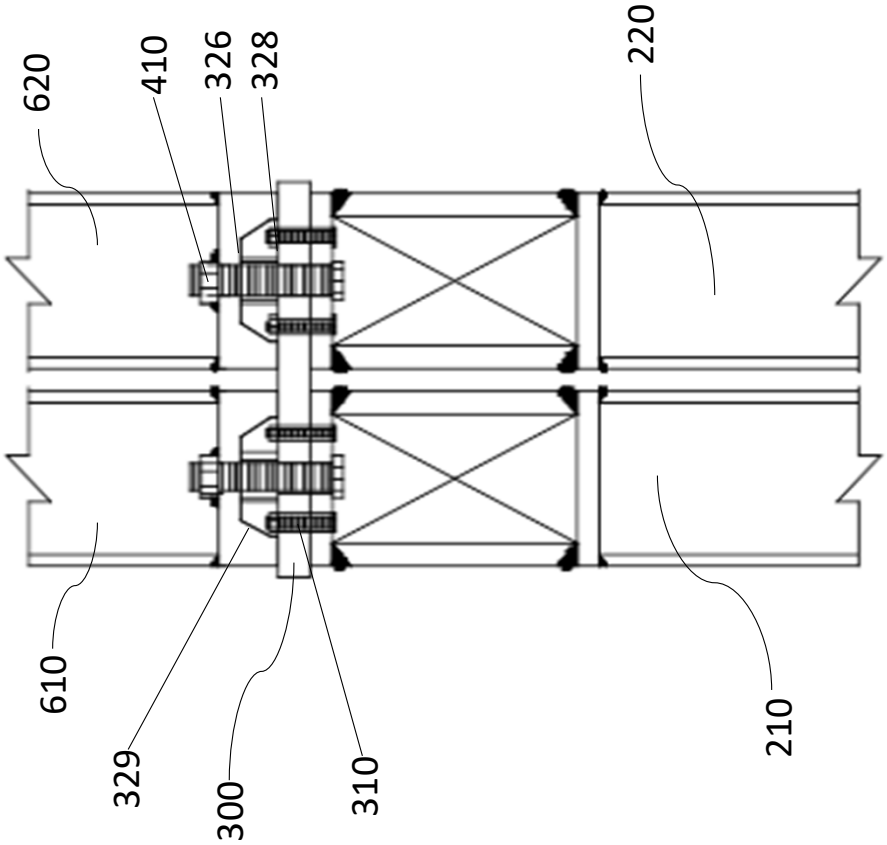

FIG. 6A

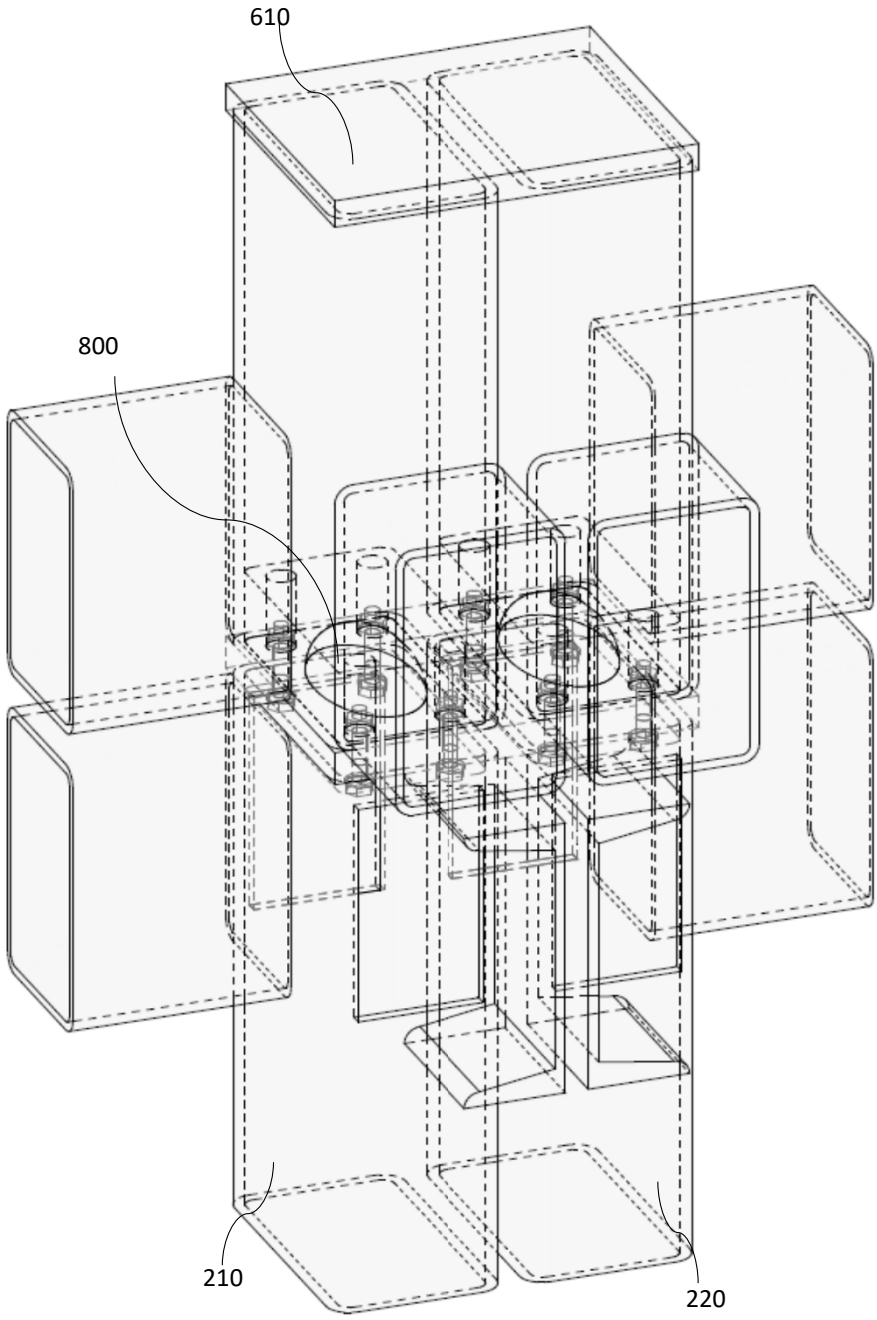

FIG. 7

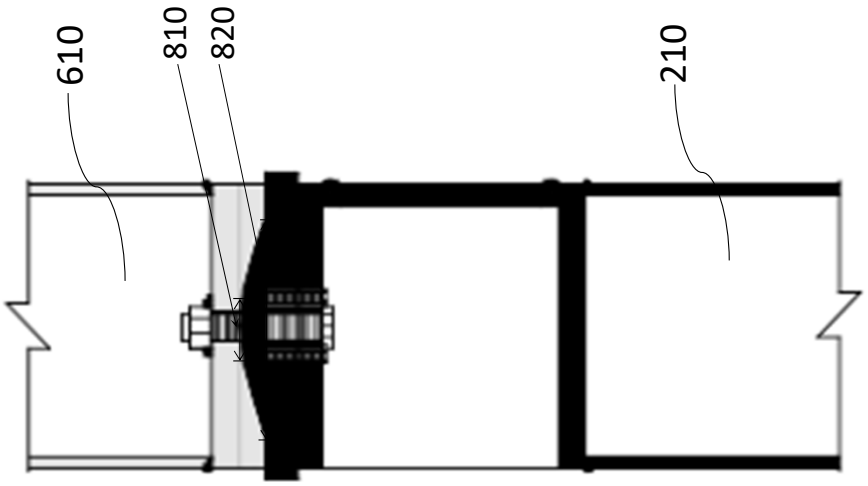

FIG. 8B

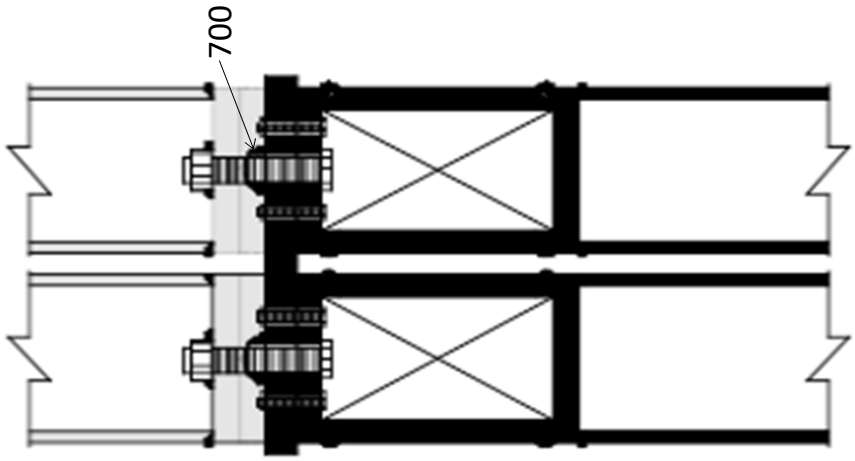

FIG. 8A

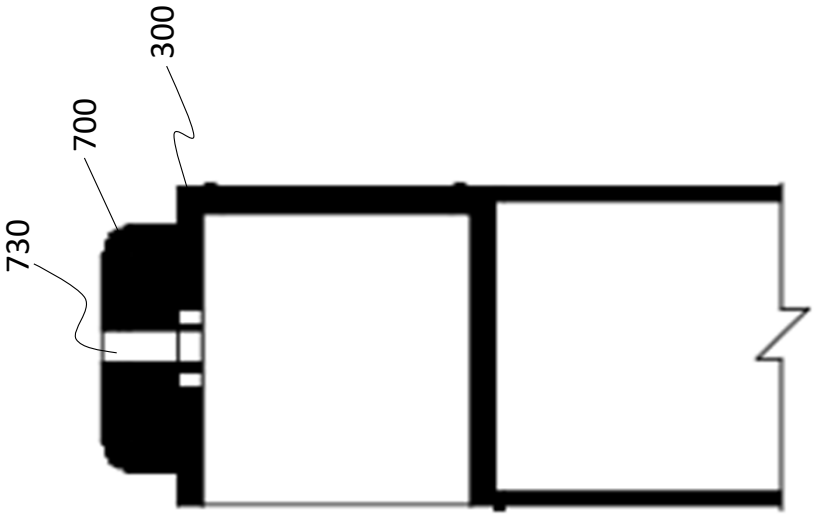

FIG. 8D

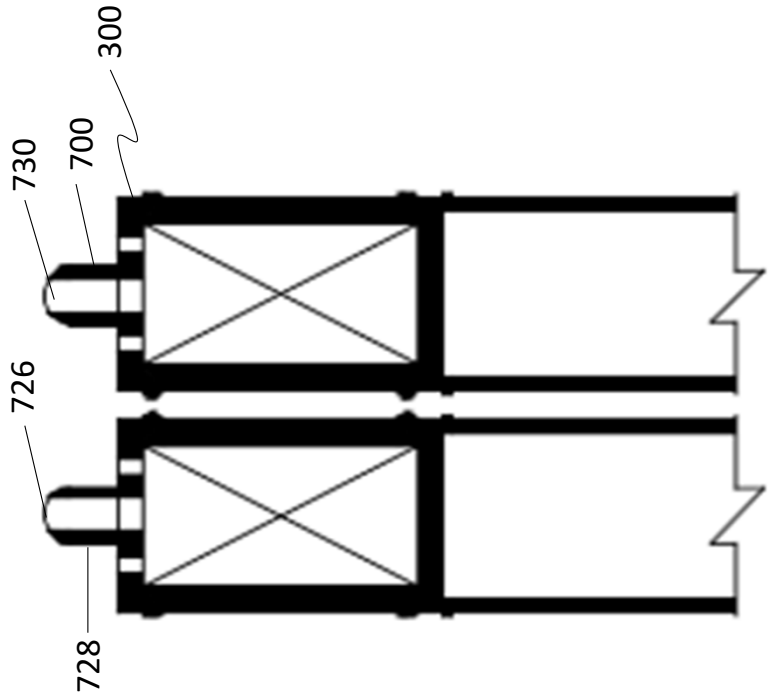

FIG. 8C

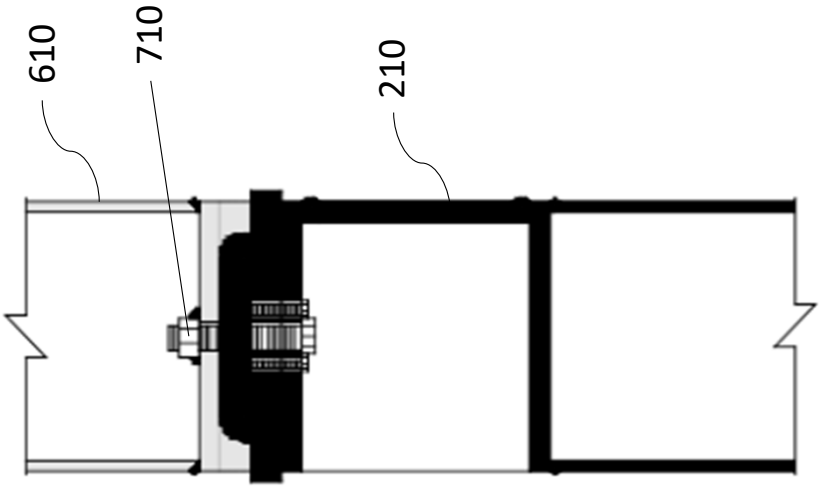

FIG. 8F

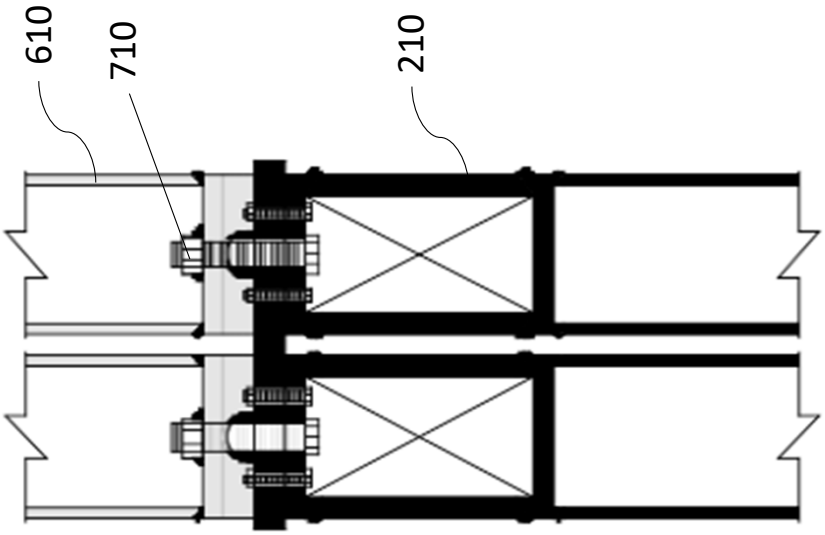

FIG. 8E

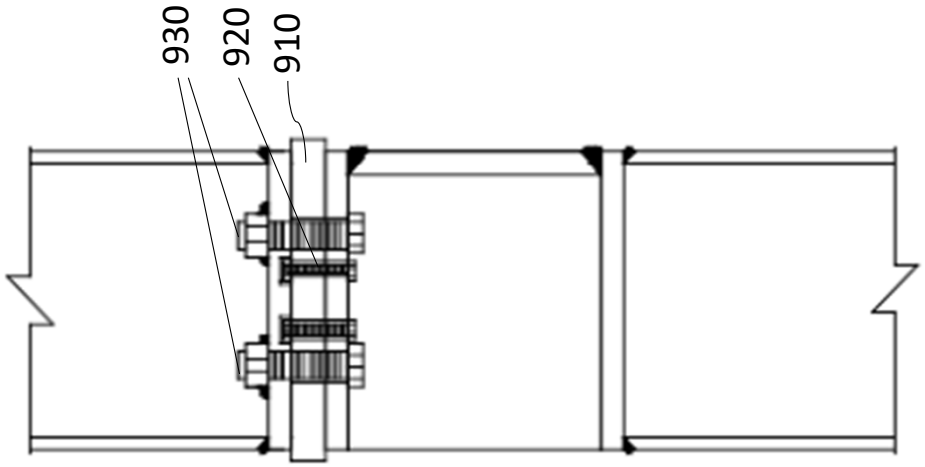

FIG. 9B

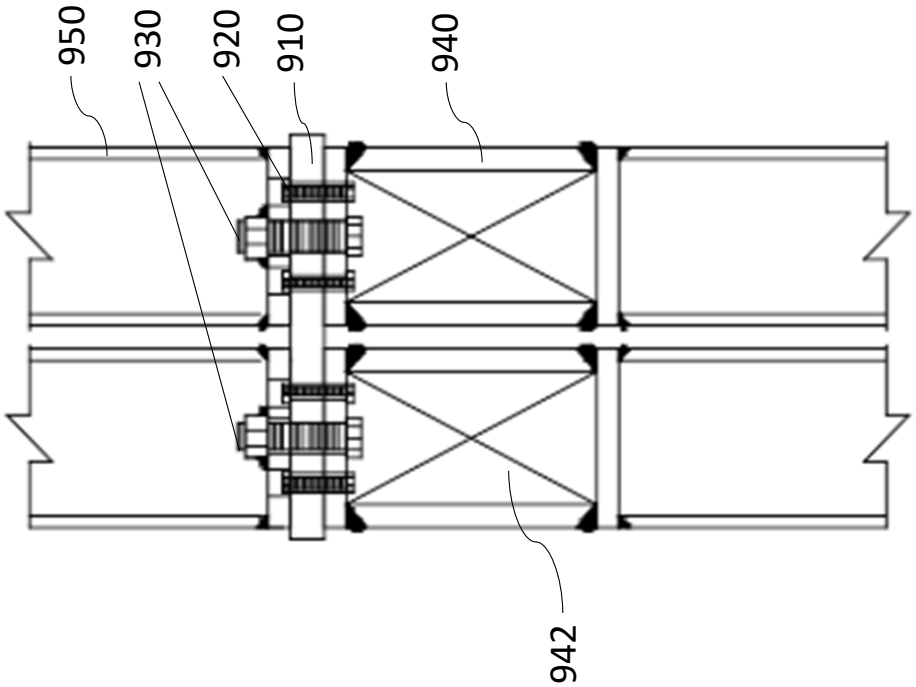

FIG. 9A

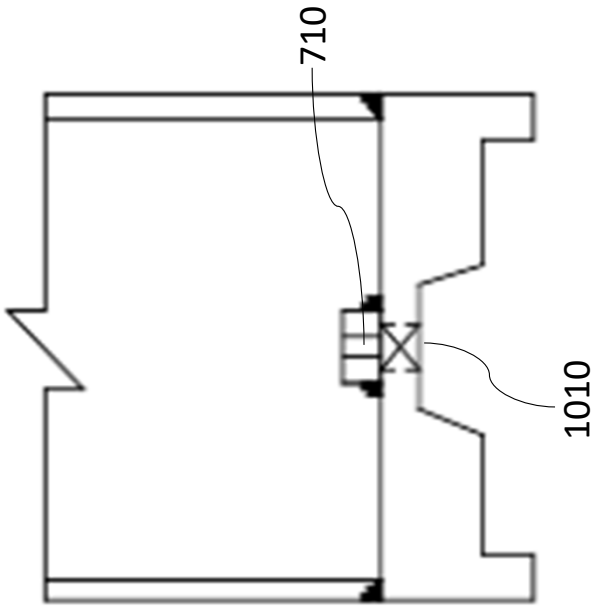

FIG. 10B

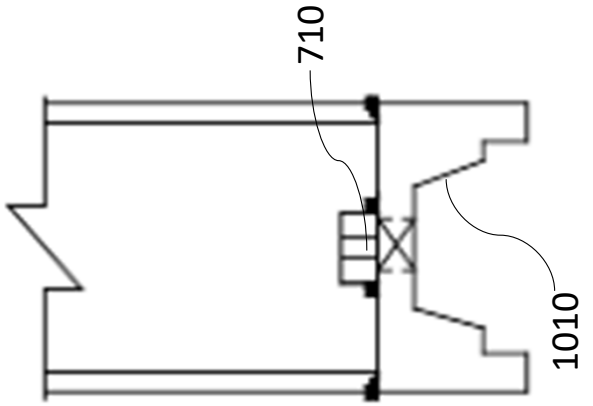

FIG. 10A

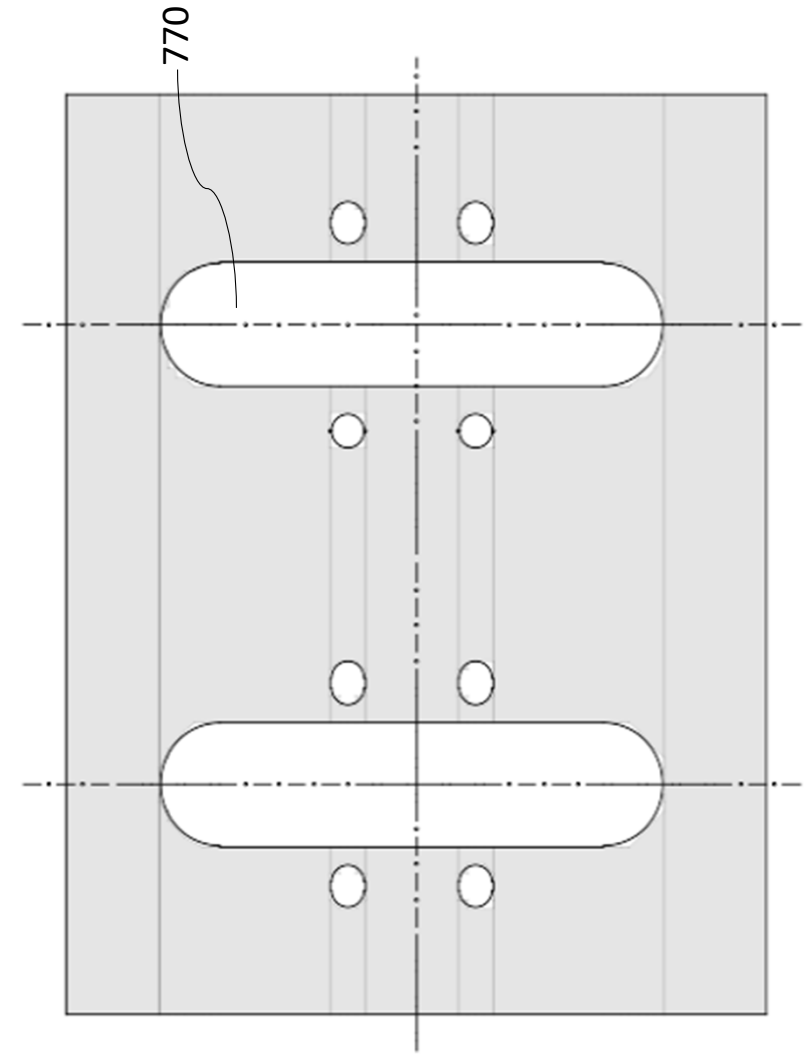

CONNECTING PLATE

FIG. 11B

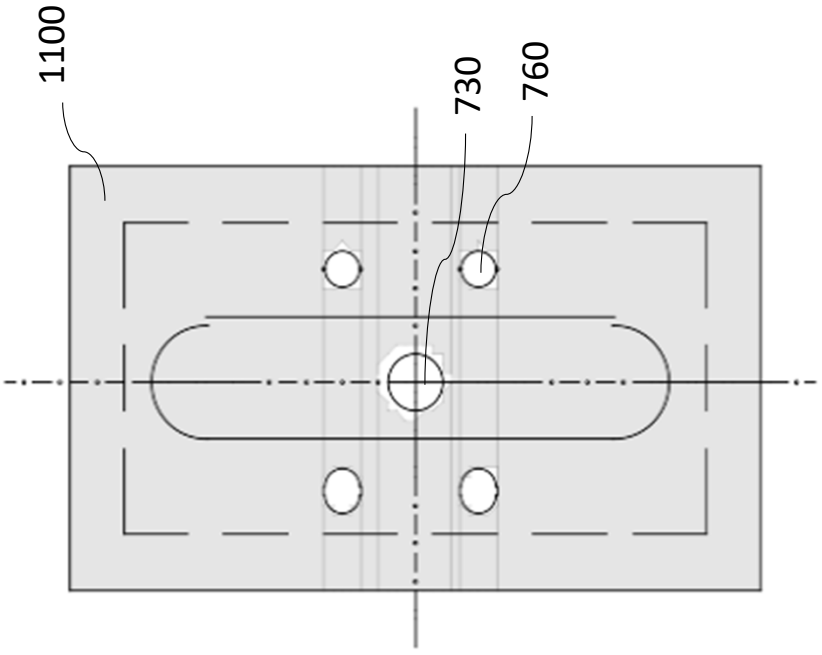

CAPPING PLATE

FIG. 11A

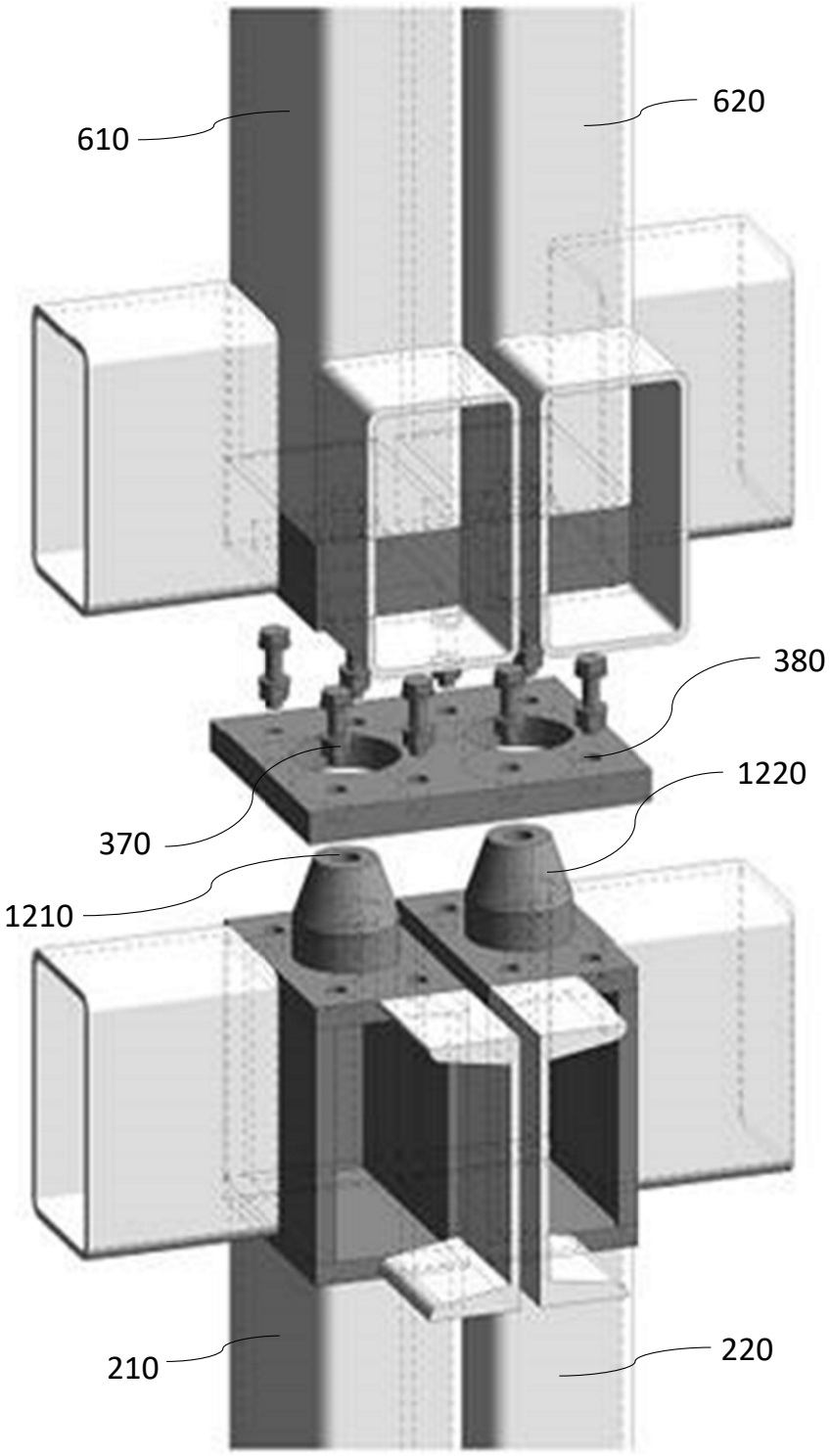

FIG. 12

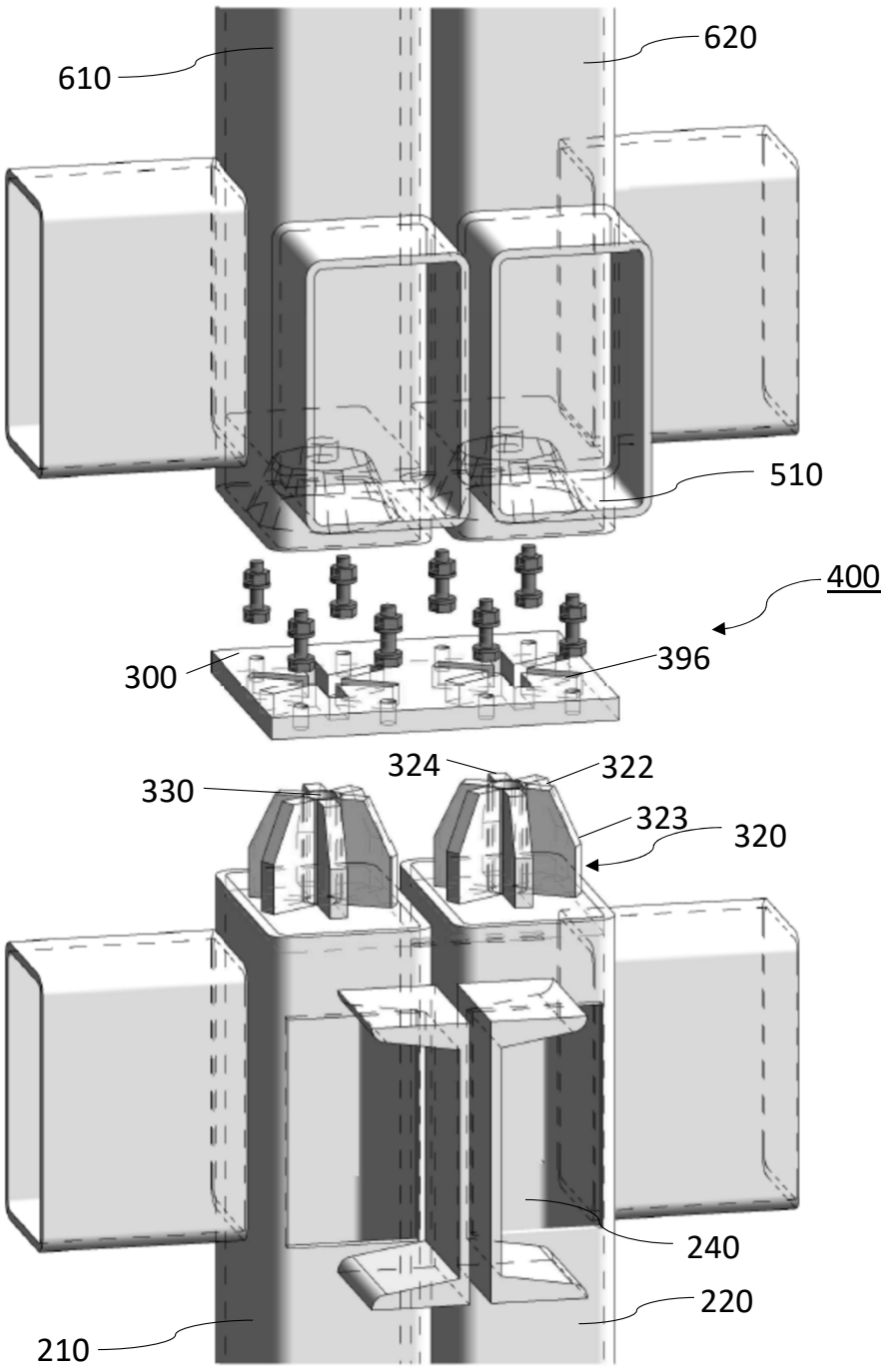

FIG. 13(a)

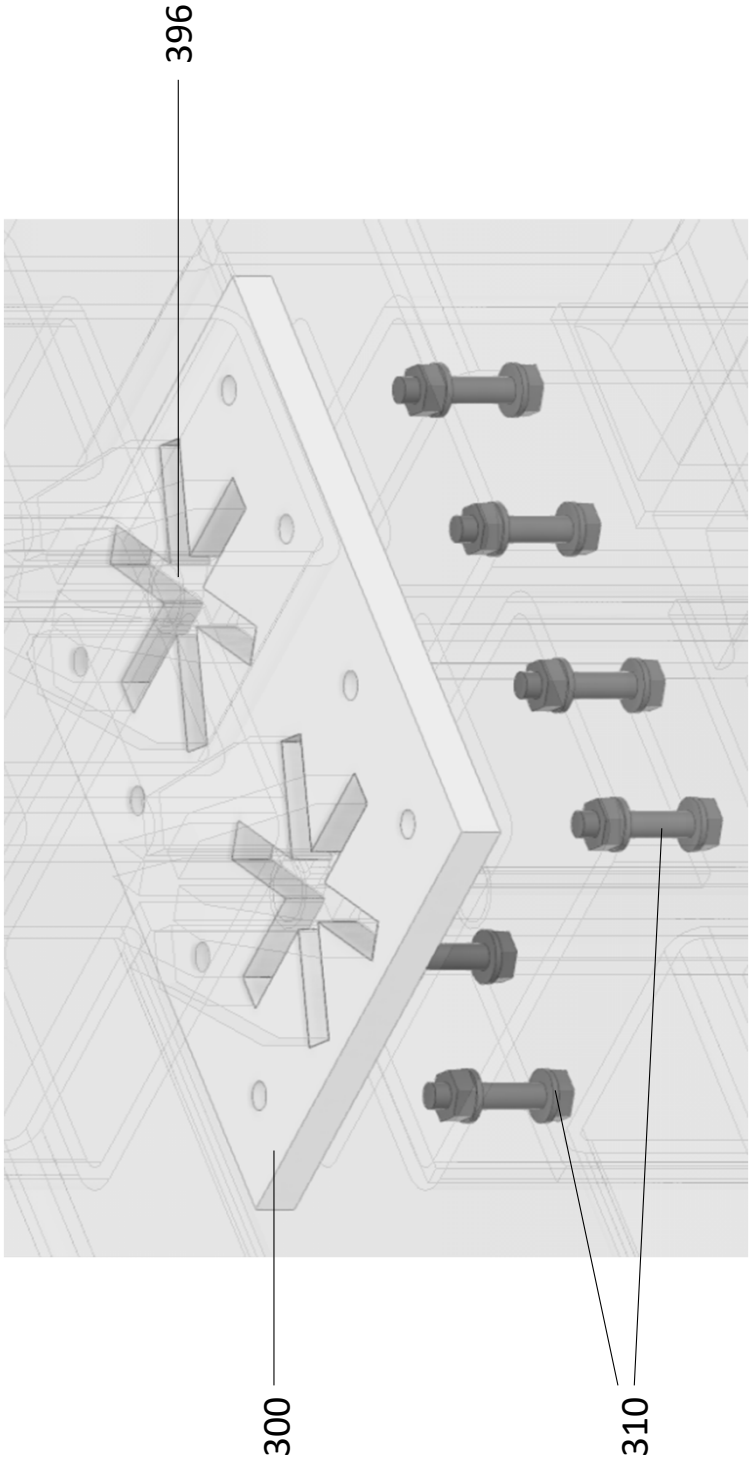

FIG. 13(b)

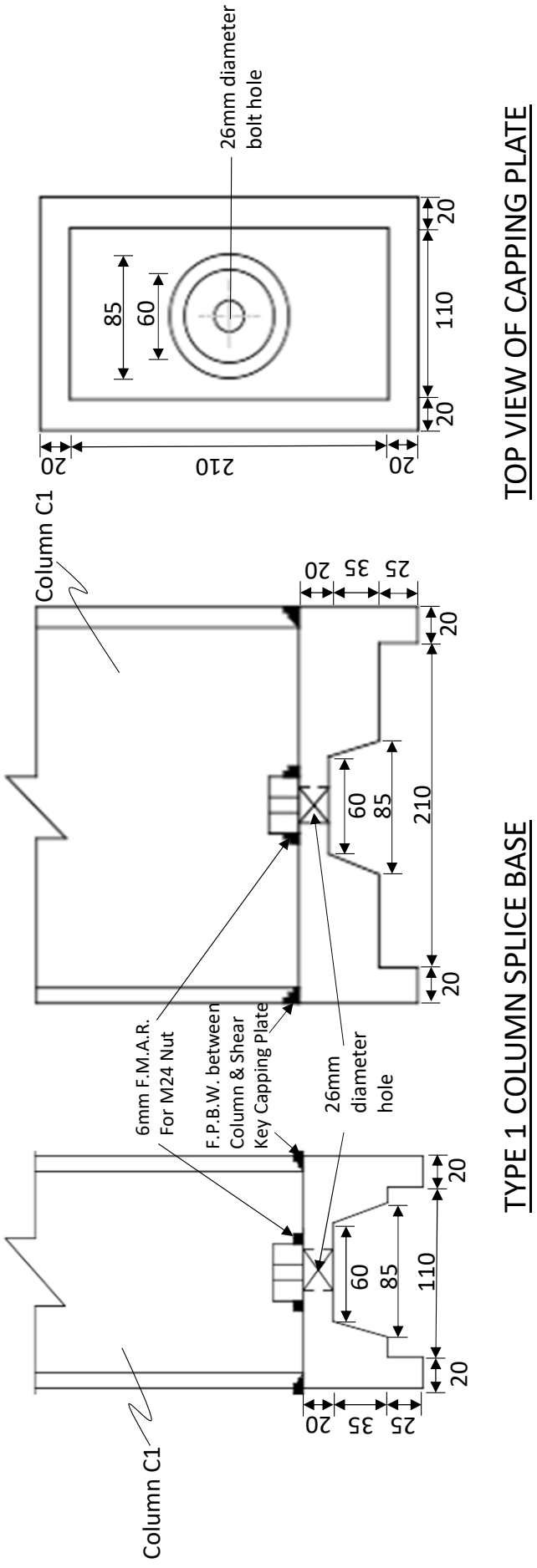
26mm diameter bolt hole
85
60
20
110
20
20
210
20
TOP VIEW OF CAPPING PLATE
Column C1
25 35 20
20
60
85
210
20
6mm F.M.A.R. For M24 Nut
F.P.B.W. between Column & Shear Key Capping Plate
26mm diameter hole
20
60
85
110
20
25 35 20
Column C1
TYPE 1 COLUMN SPLICE BASE

FIG. 14

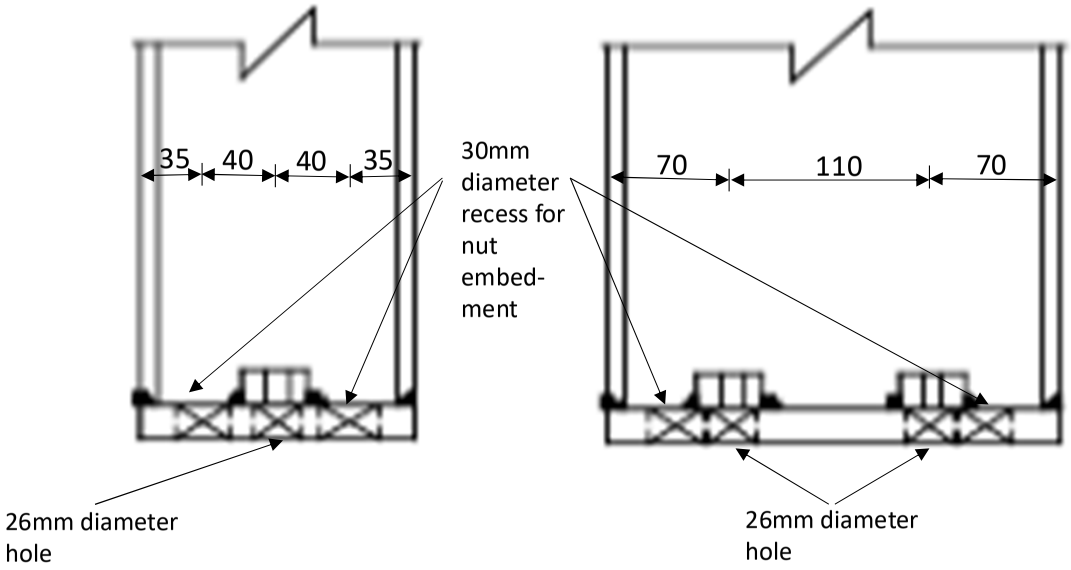

TYPE 2 COLUMN SPLICE BASE

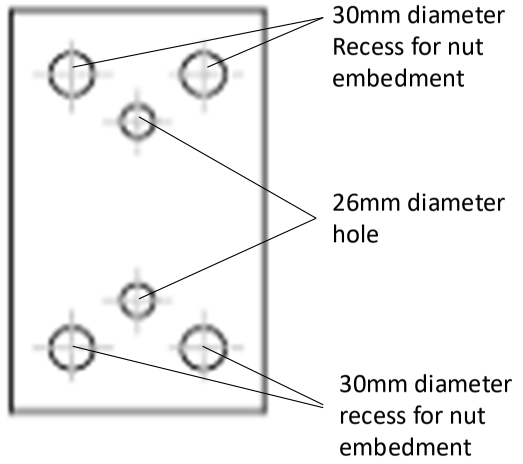

PLANE VIEW OF COLUMN END PLATE

FIG. 14(a)

Replacement Sheet

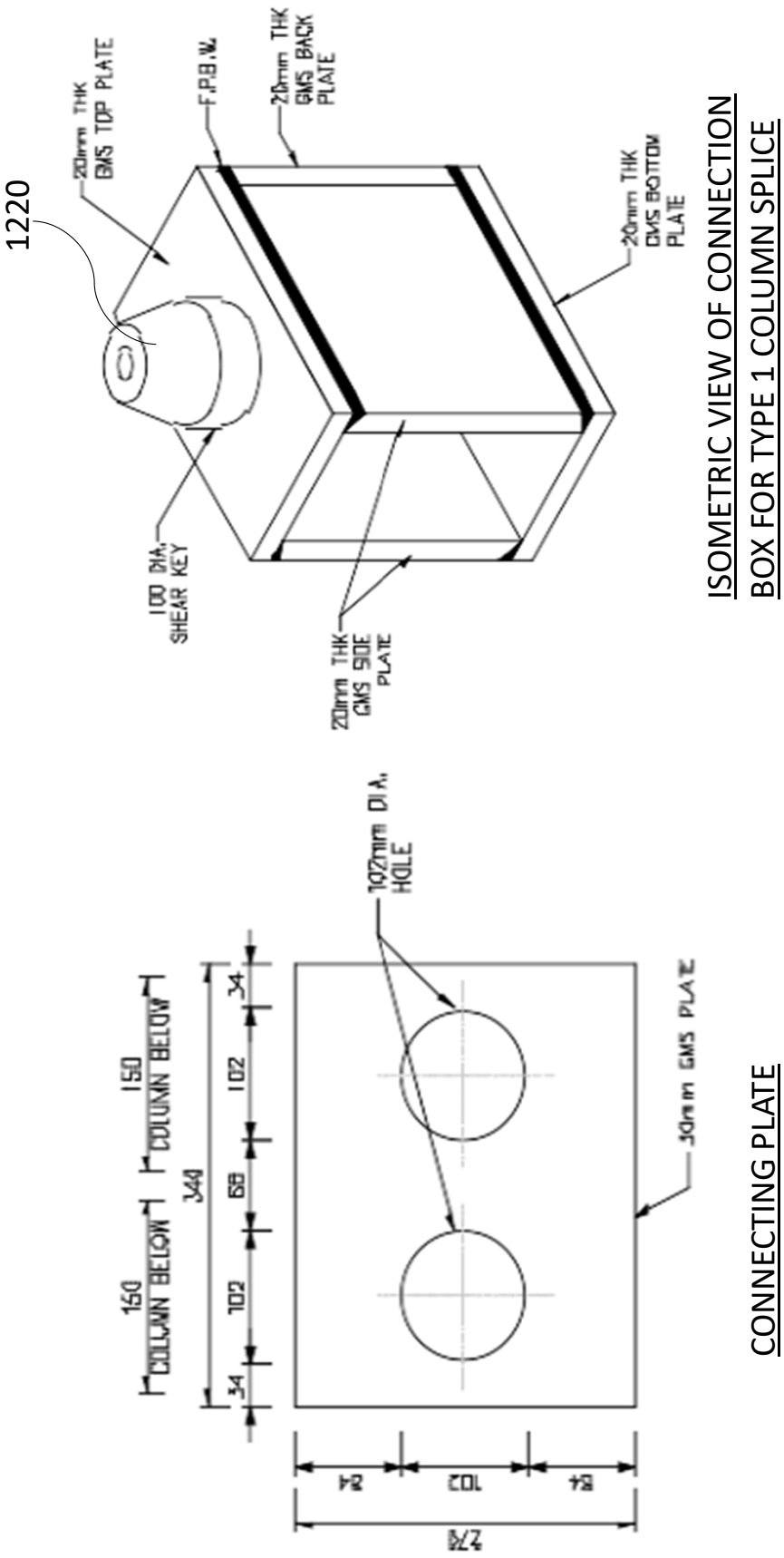
1220
20mm THK GMS TOP PLATE
F.P.B.W.
20mm THK GMS BACK PLATE
20mm THK GMS BOTTOM PLATE
100 DIA. SHEAR KEY
20mm THK GMS SIDE PLATE
ISOMETRIC VIEW OF CONNECTION BOX FOR TYPE 1 COLUMN SPLICE
102mm DIA. HOLE
30mm GMS PLATE
150 COLUMN BELOW
150 COLUMN BELOW
340
34
102
68
102
34
84
102
84
278
CONNECTING PLATE

FIG. 14(b)

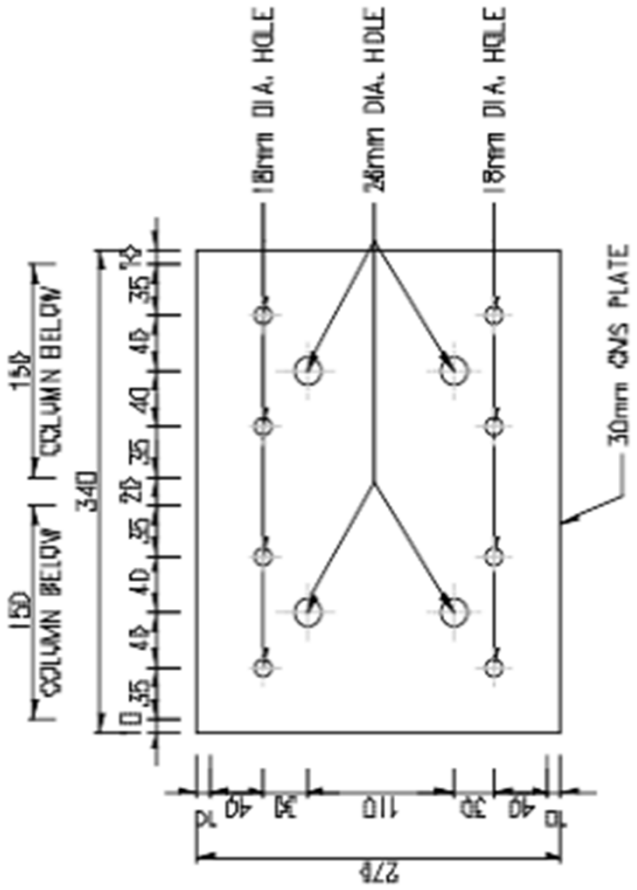

CONNECTING PLATE

FIG. 14(c)

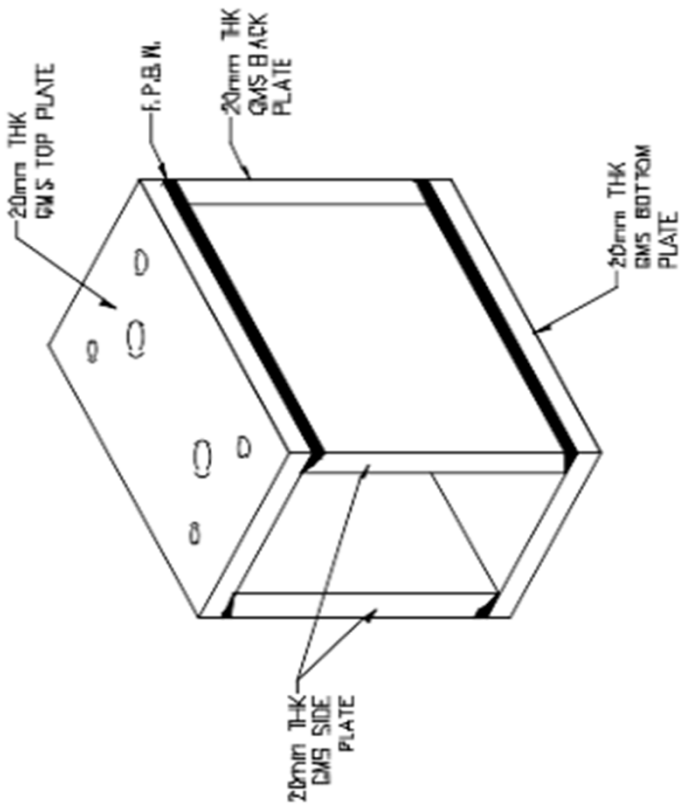

ISOMETRIC VIEW OF CONNECTION BOX FOR TYPE 2 COLUMN SPLICE

FIG. 14(d)

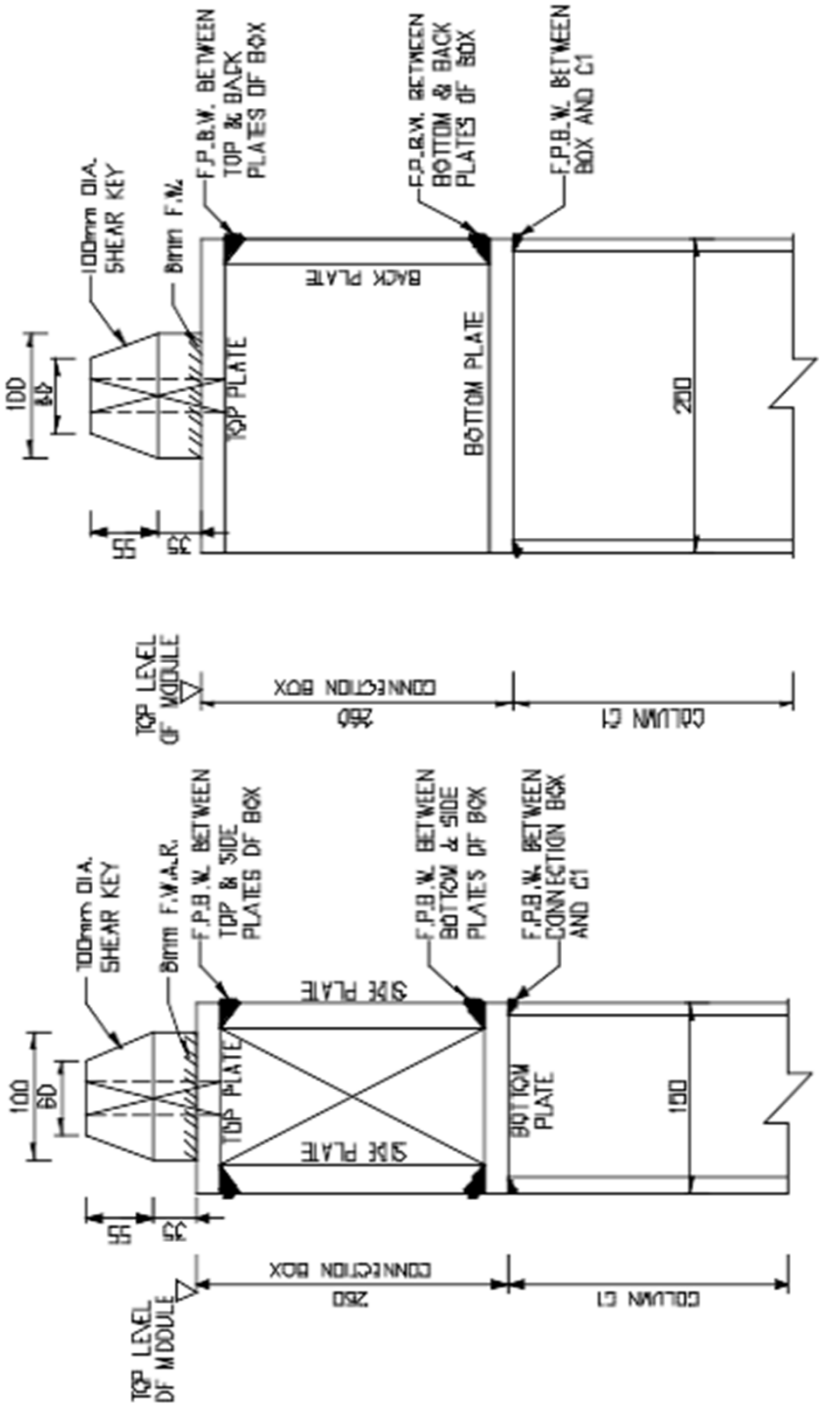

TYPE 1 COLUMN SPLICE

FIG. 14(e)

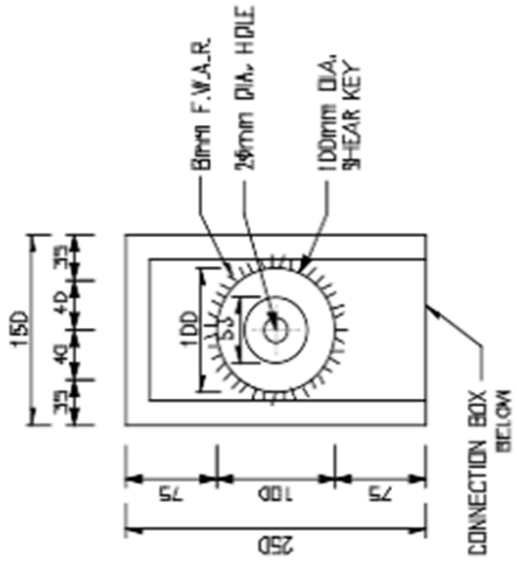

TOP VIEW OF CONNECTION BOX

TOP PLATE

FIG. 14(f)

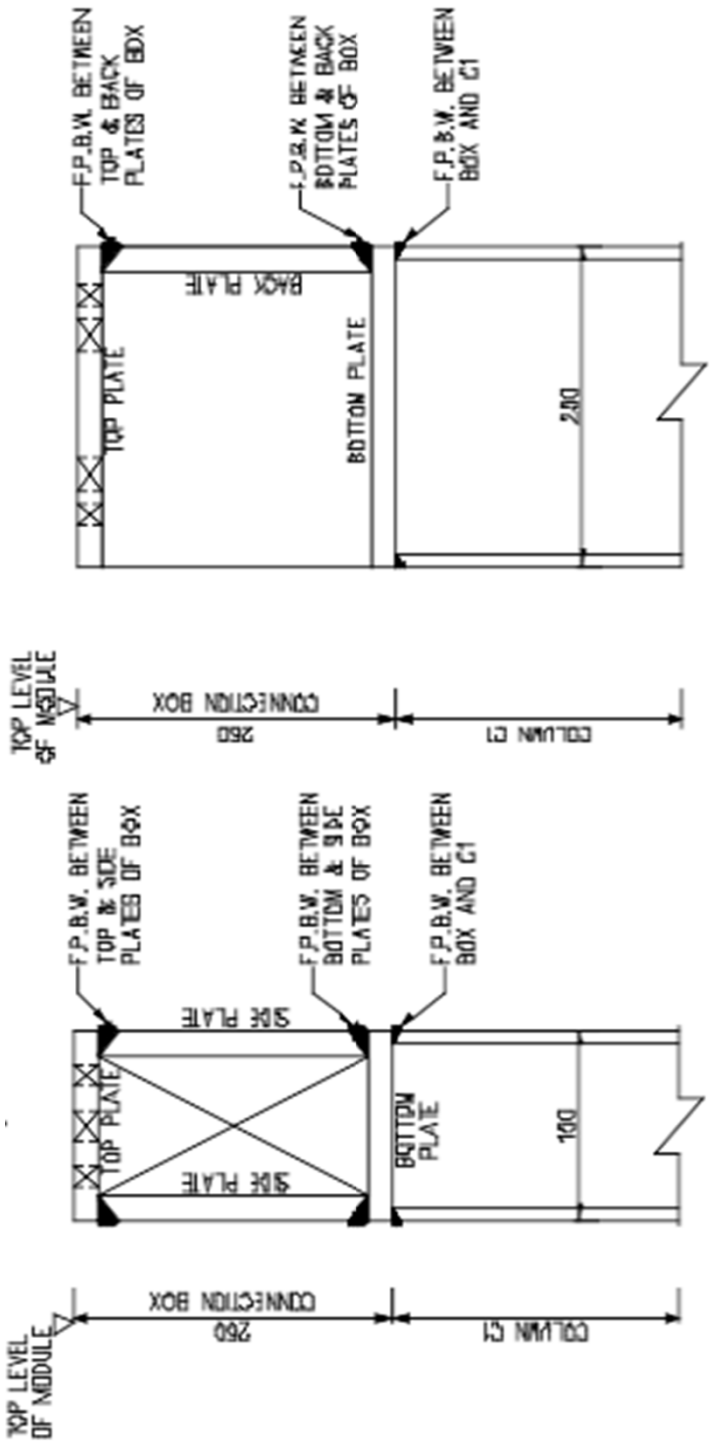

TYPE 2 COLUMN SPLICE

FIG. 14(g)

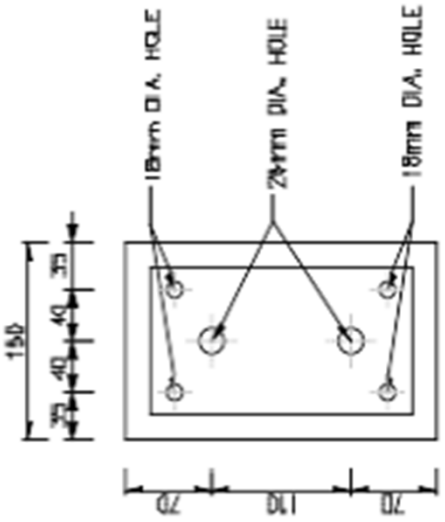

TOP VIEW OF CONNECTION BOX

TOP PLATE

FIG. 14(h)

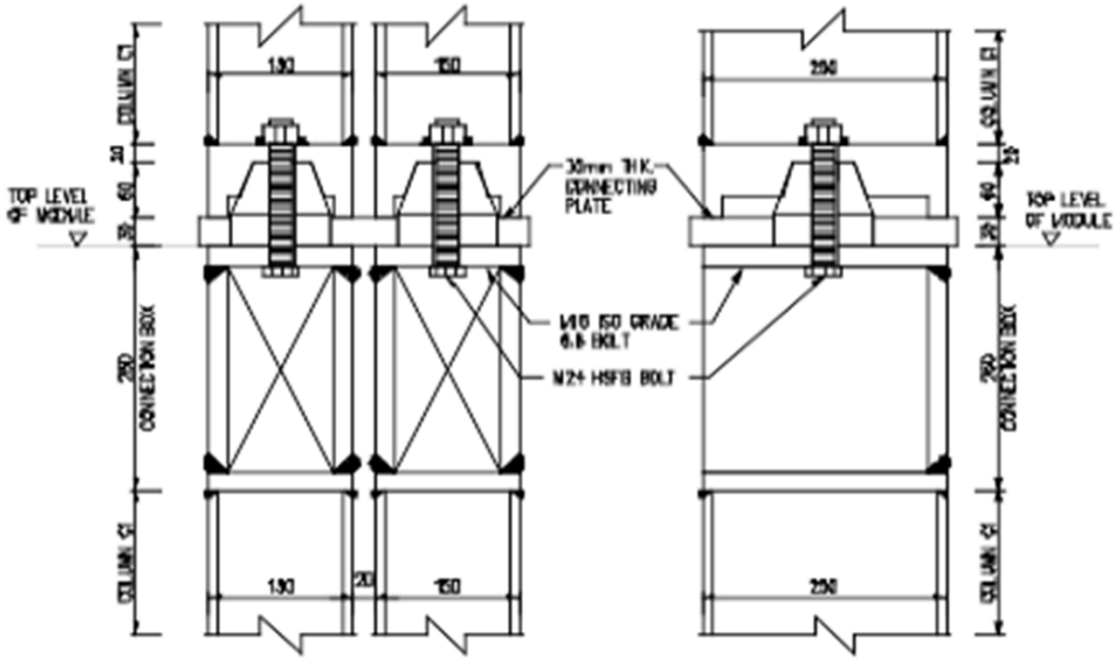

TYPE 1 COLUMN SPLICE

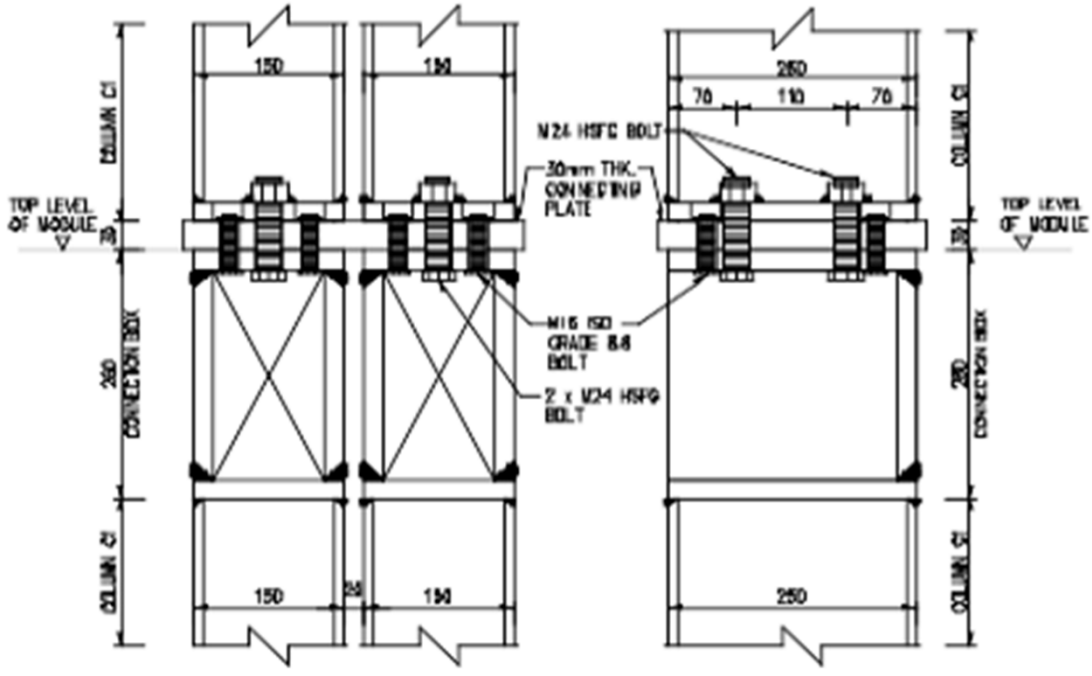

TYPE 2 COLUMN SPLICE

FIG. 15

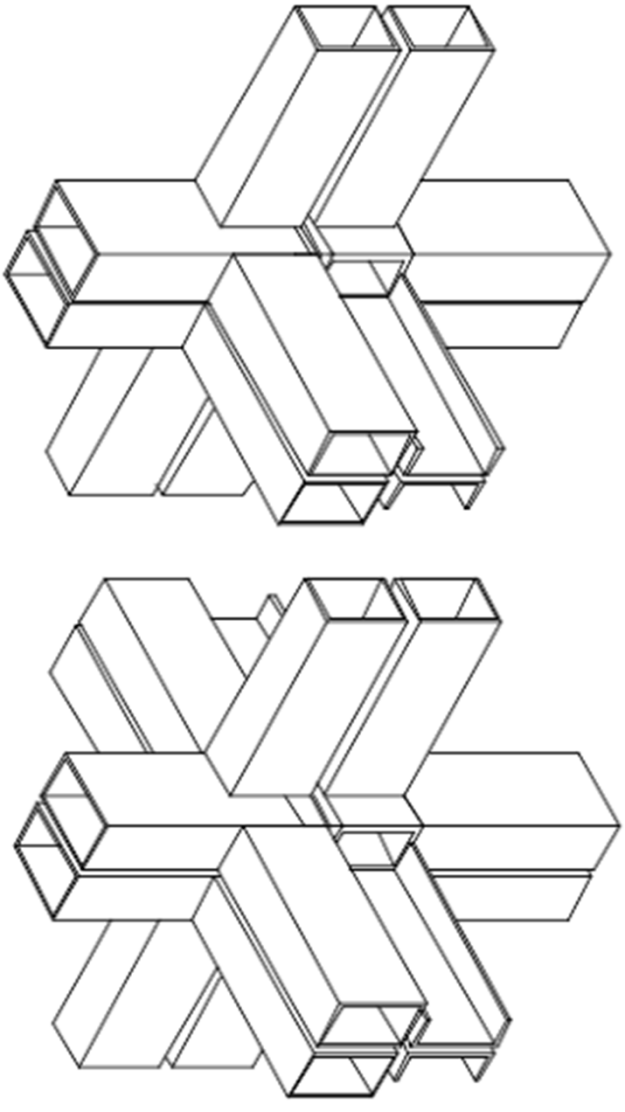

ISOMETRIC VIEW OF
TYPE 2 COLUMN SPLICE JOINT

ISOMETRIC VIEW OF
TYPE 1 COLUMN SPLICE JOINT

FIG. 15(a)

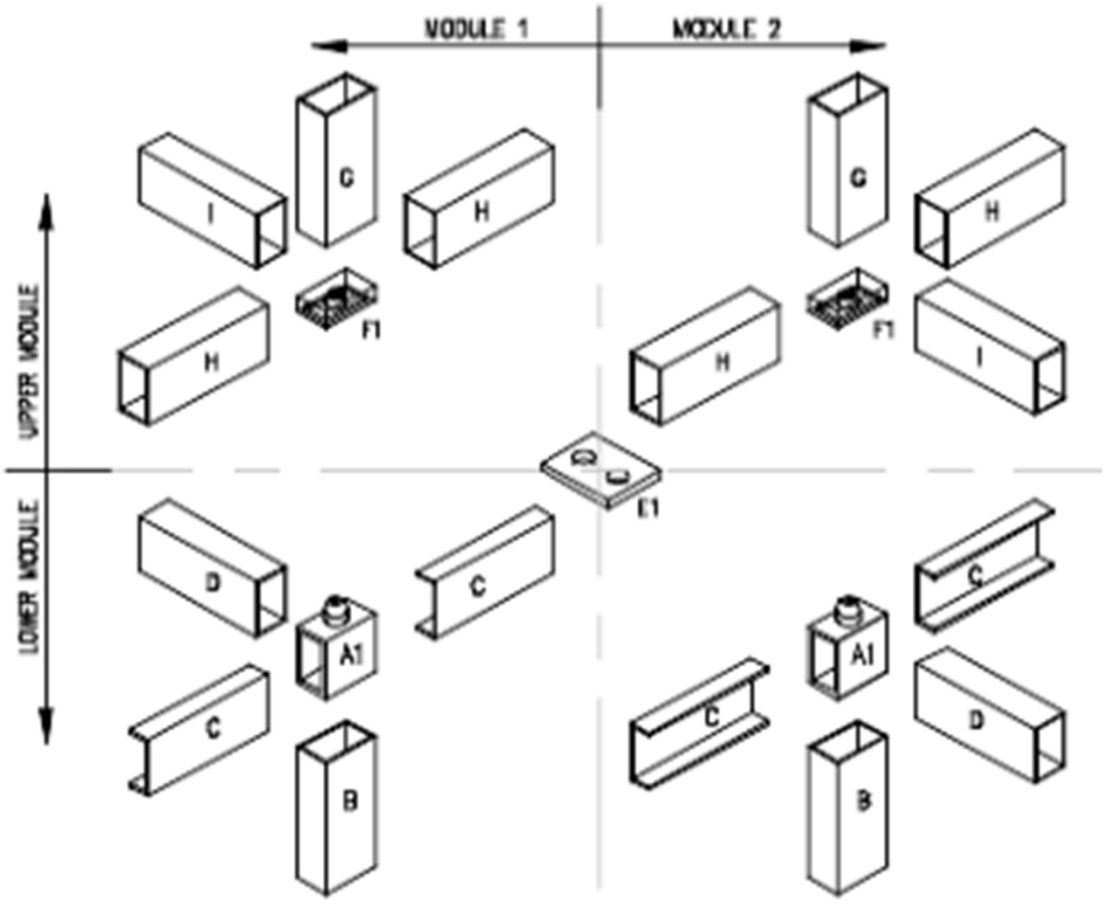

EXPLODED VIEW OF TYPE 1 COLUMN SPLICE JOINT

MODULE COMPONENTS:
A1 – CONNECTION BOX WITH SHEAR KEY
B – COLUMN OF LOWER MODULE
C – LONG-SPAN CEILING BEAM
D – SHORT-SPAN CEILING BEAM
E1 – CONNECTING PLATE FOR TYPE 1 SPLICE JOINT
F1 – SHEAR KEY CAPPING PLATE FOR TYPE 1 SPLICE JOINT
G – COLUMN OF UPPER MODULE
H – LONG-SPAN FLOOR BEAM
I – SHORT-SPAN FLOOR BEAM

FIG. 15(b)

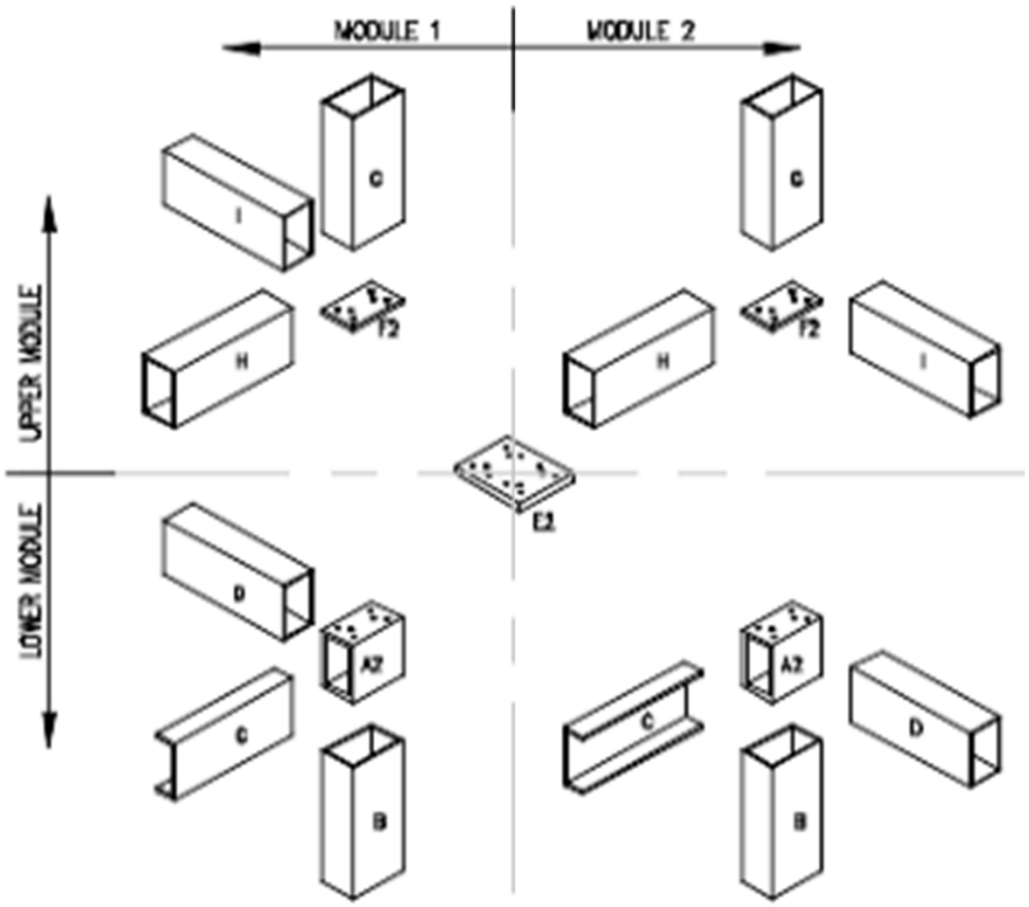

EXPLODED VIEW OF TYPE 2 COLUMN SPLICE JOINT

MODULE COMPONENTS:
A2 – CONNECTION BOX
B – COLUMN OF LOWER MODULE
C – LONG-SPAN CEILING BEAM
D – SHORT-SPAN CEILING BEAM
E2 – CONNECTING PLATE FOR TYPE 2 SPLICE JOINT
F2 – COLUMN END PLATE FOR TYPE 2 SPLICE JOINT
G – COLUMN OF UPPER MODULE
H – LONG-SPAN FLOOR BEAM
I – SHORT-SPAN FLOOR BEAM

FIG. 15(c)

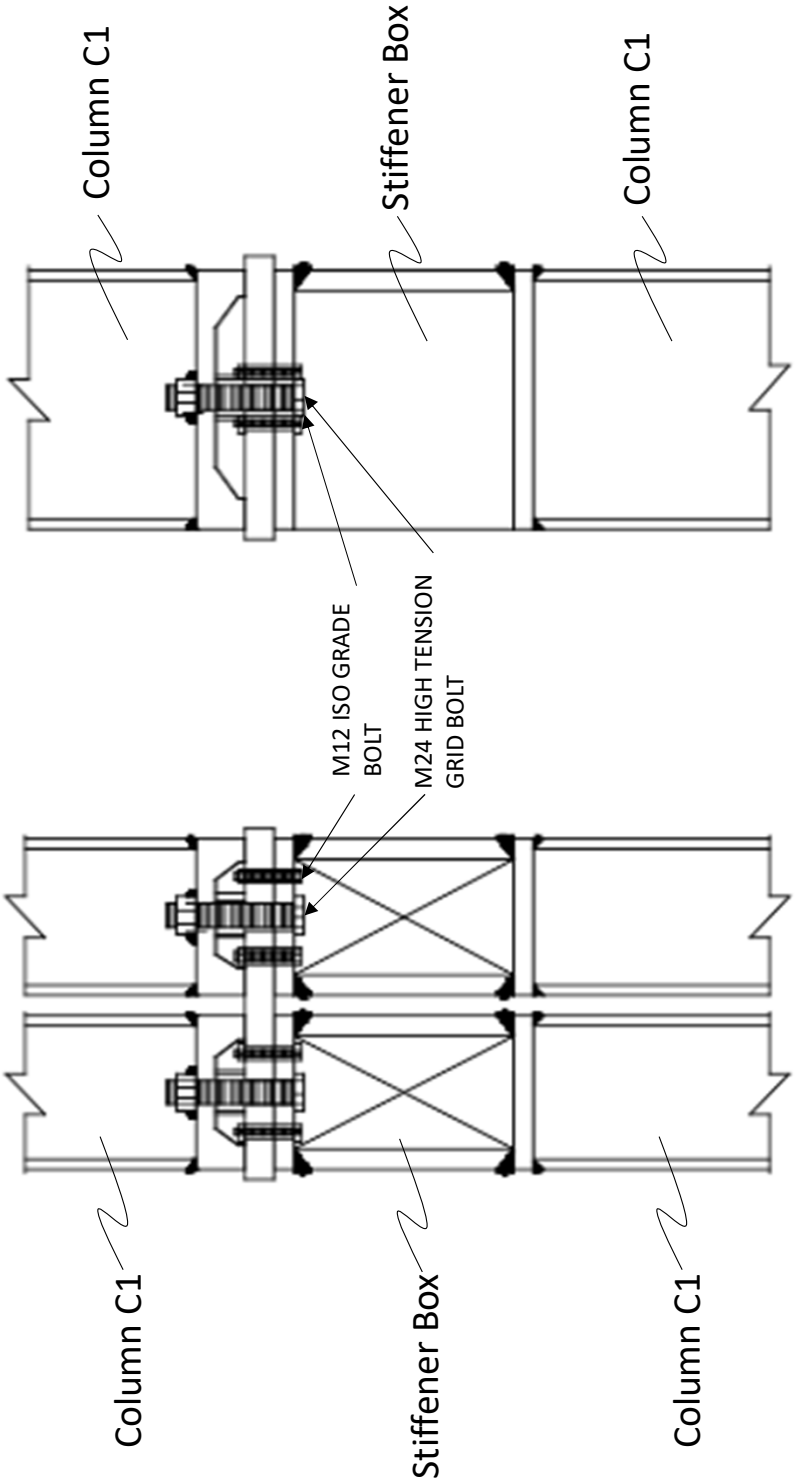

TYPE 1 COLUMN JOINT

FIG. 16

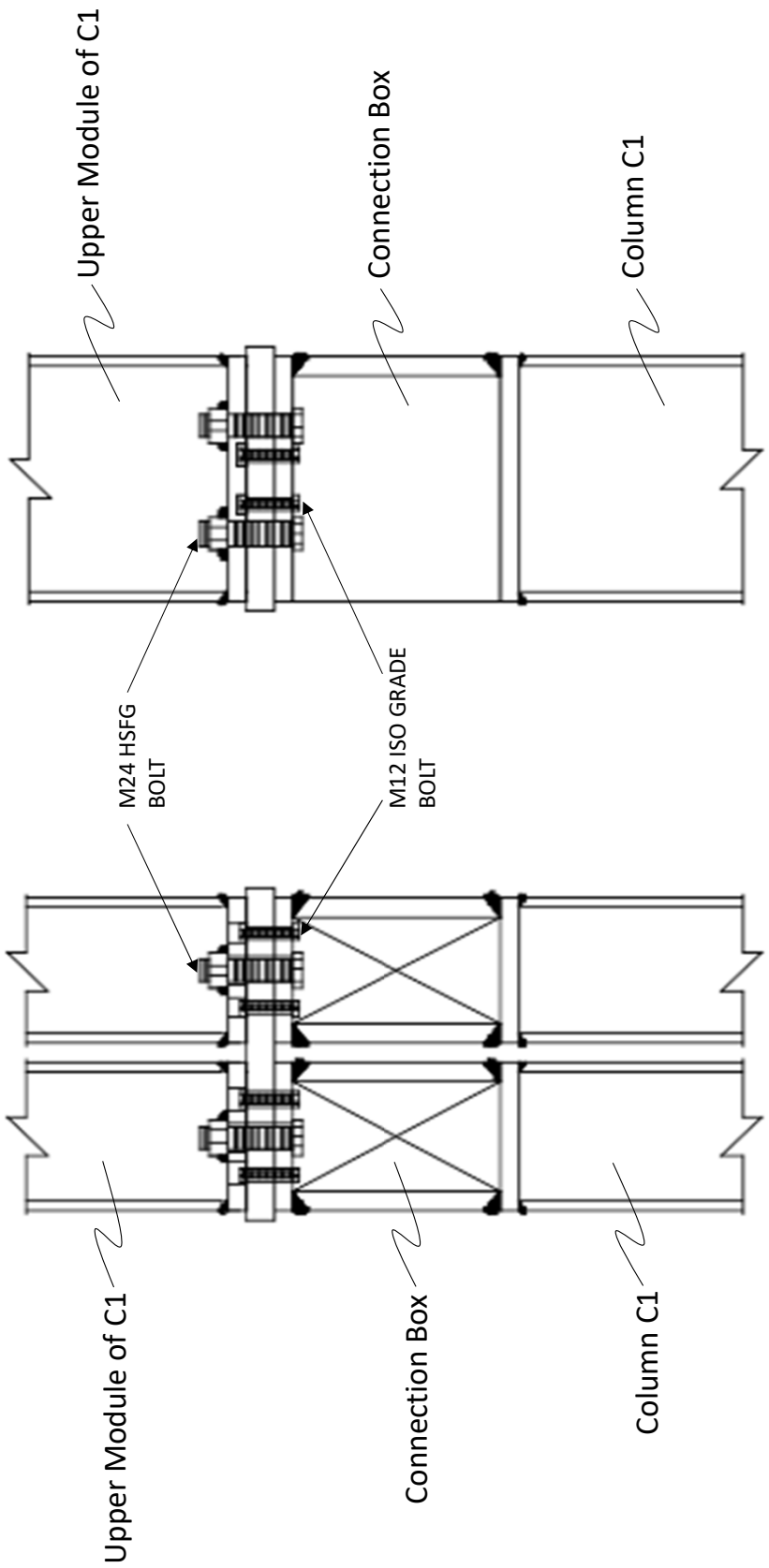

TYPE 2 COLUMN JOINT

FIG. 16(a)

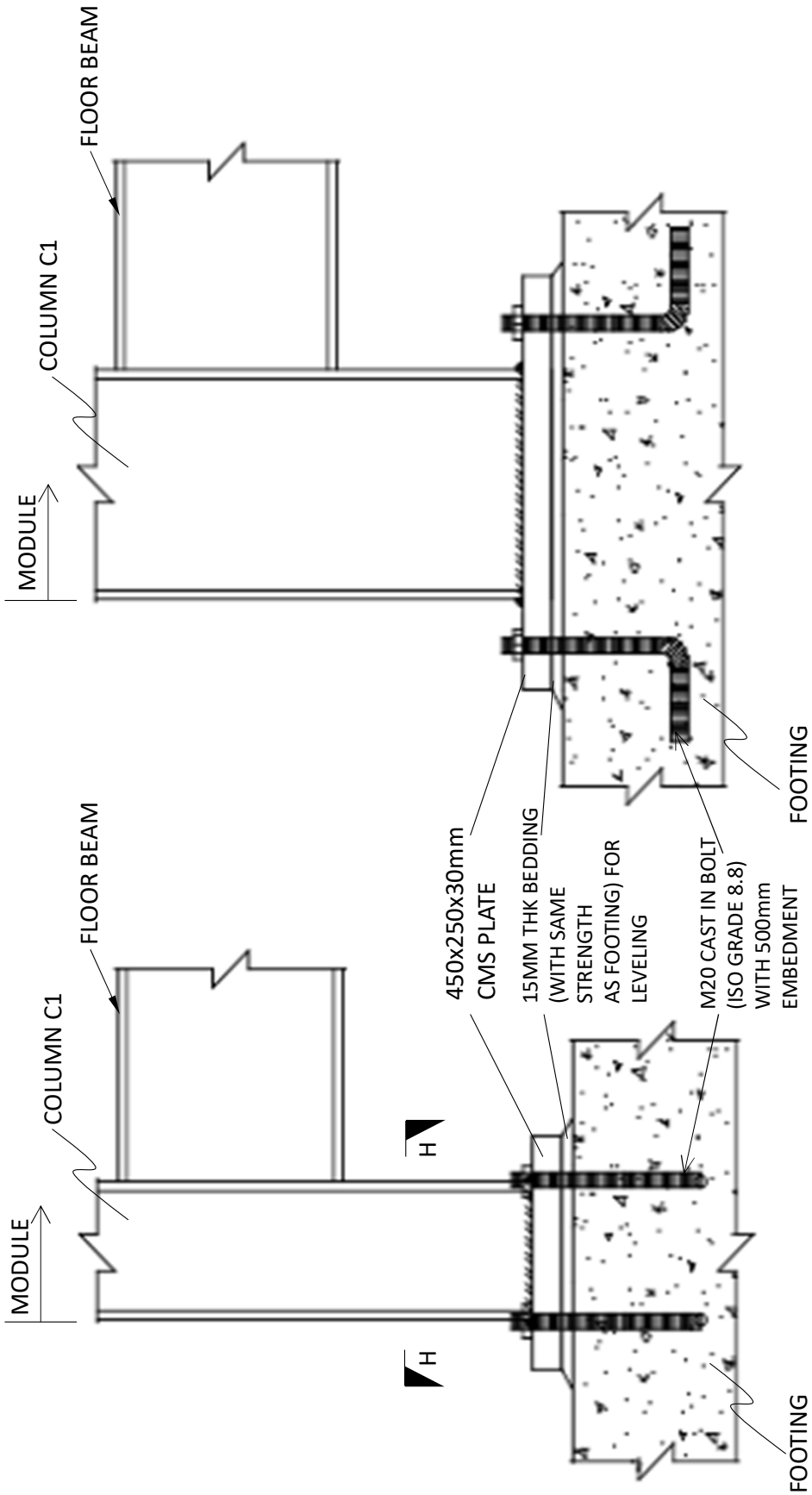

BASE FIXING FOR EDGE COLUMN TO FOOTINGS

FIG. 16(b)

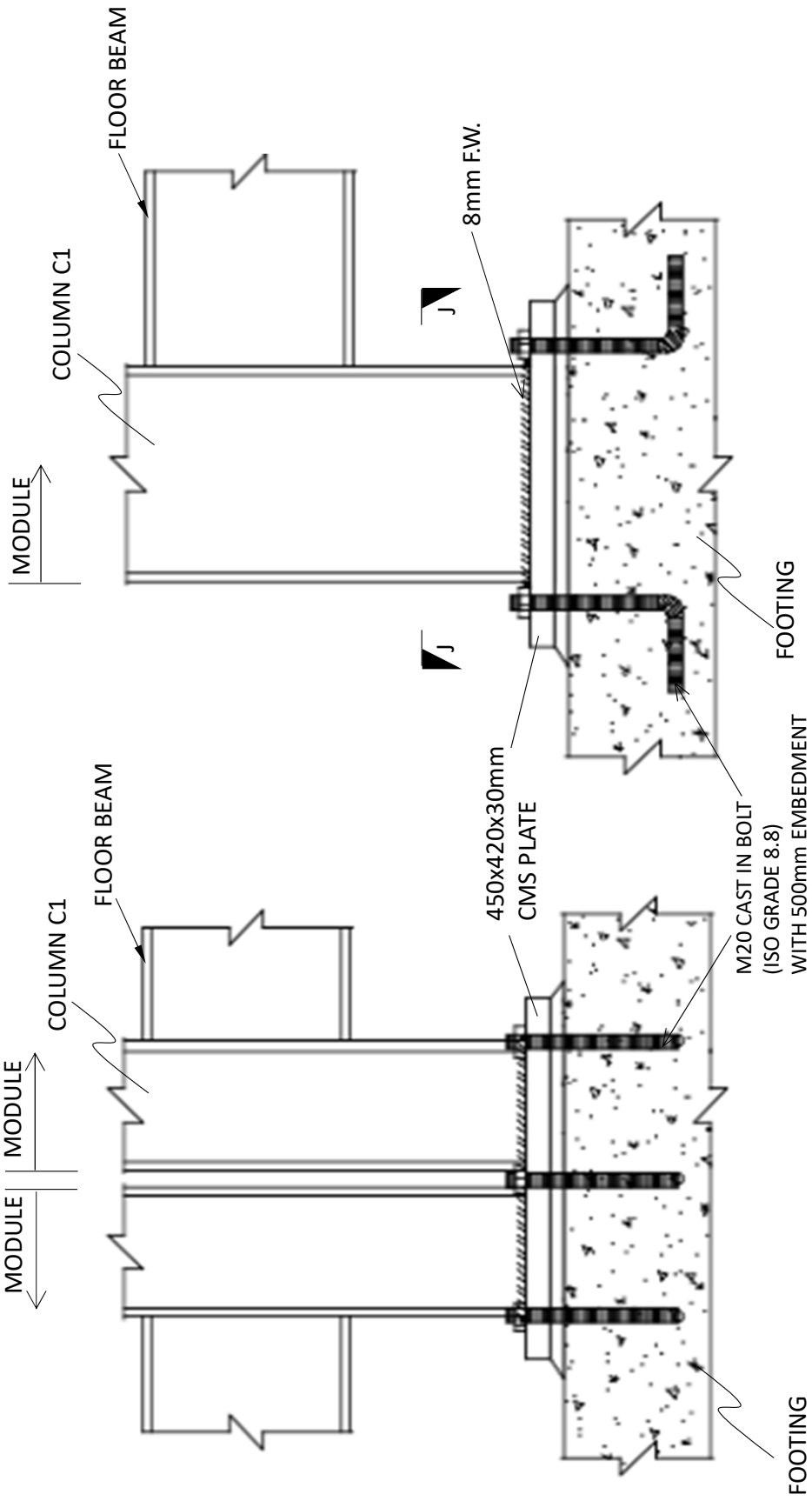

BASE FIXING FOR INTERIOR COLUMN TO FOOTINGS

FIG. 16(c)

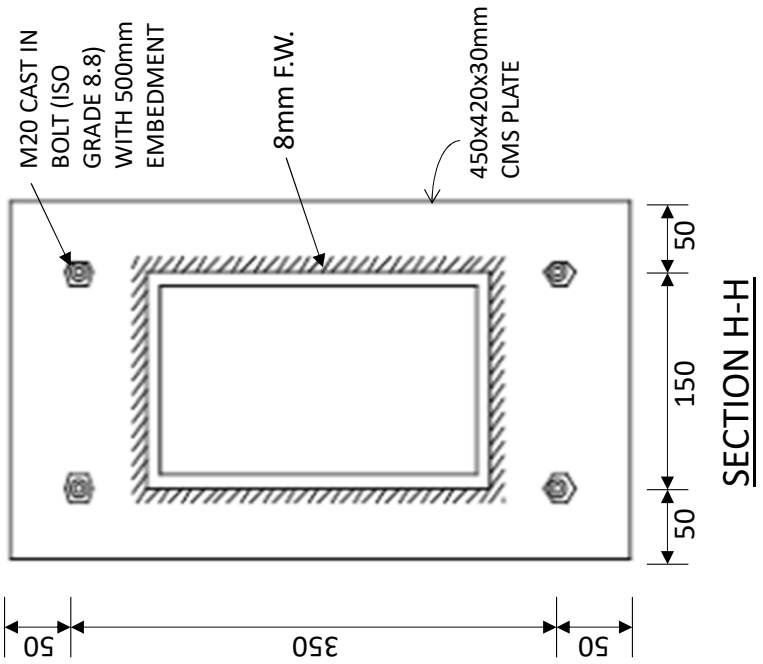
M20 CAST IN BOLT (ISO GRADE 8.8) WITH 500mm EMBEDMENT
8mm F.W.
450x420x30mm CMS PLATE
50
150
50
350
50
SECTION H-H

FIG. 16(d)

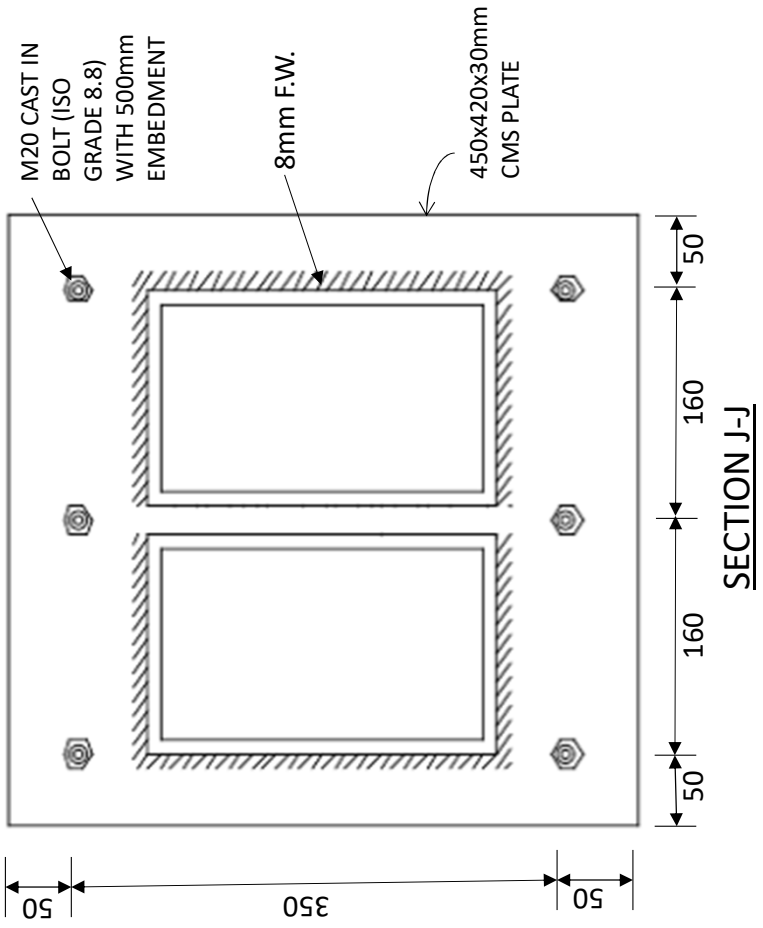
M20 CAST IN BOLT (ISO GRADE 8.8) WITH 500mm EMBEDMENT
8mm F.W.
450x420x30mm CMS PLATE
50
160
160
50
SECTION J-J
50
350
50

FIG. 16(e)

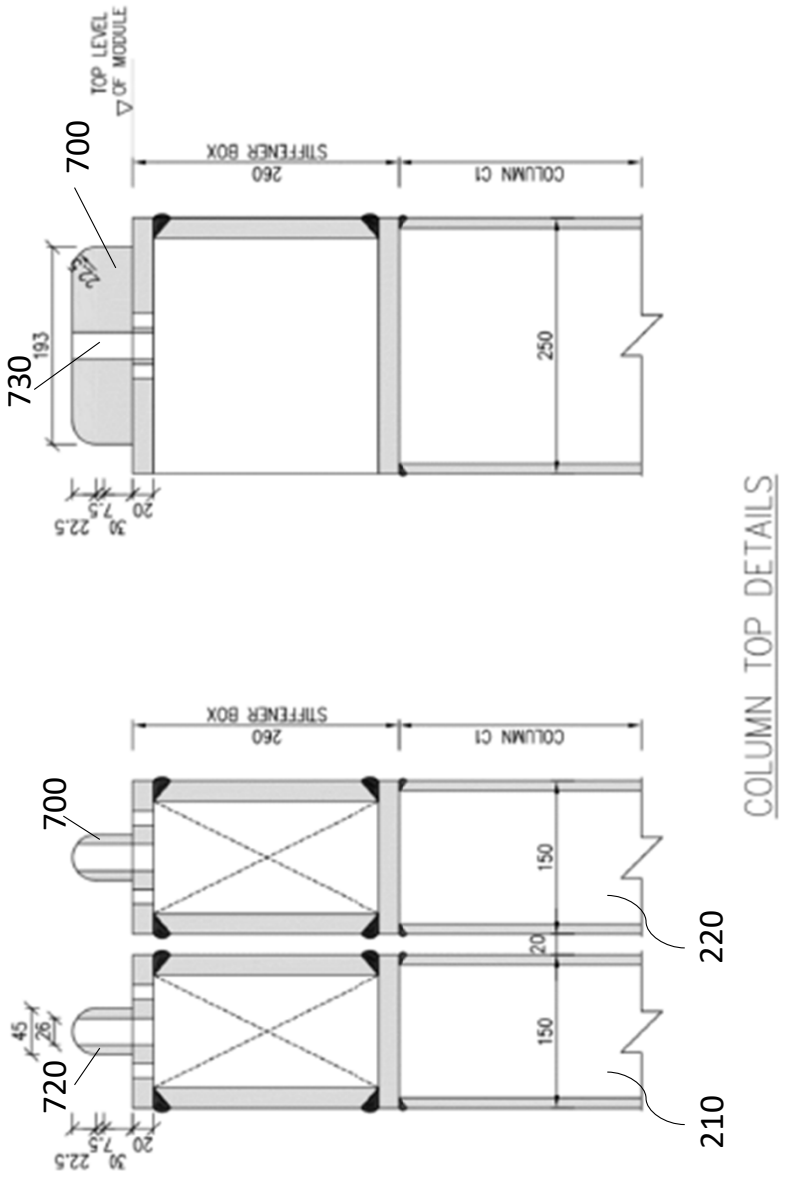
TOP LEVEL
OF MODULE
700
730
193
STIFFENER BOX
260
COLUMN C1
250
20
7.5
35
22.5
700
720
45
26
150
20
150
220
210
COLUMN TOP DETAILS

FIG. 17

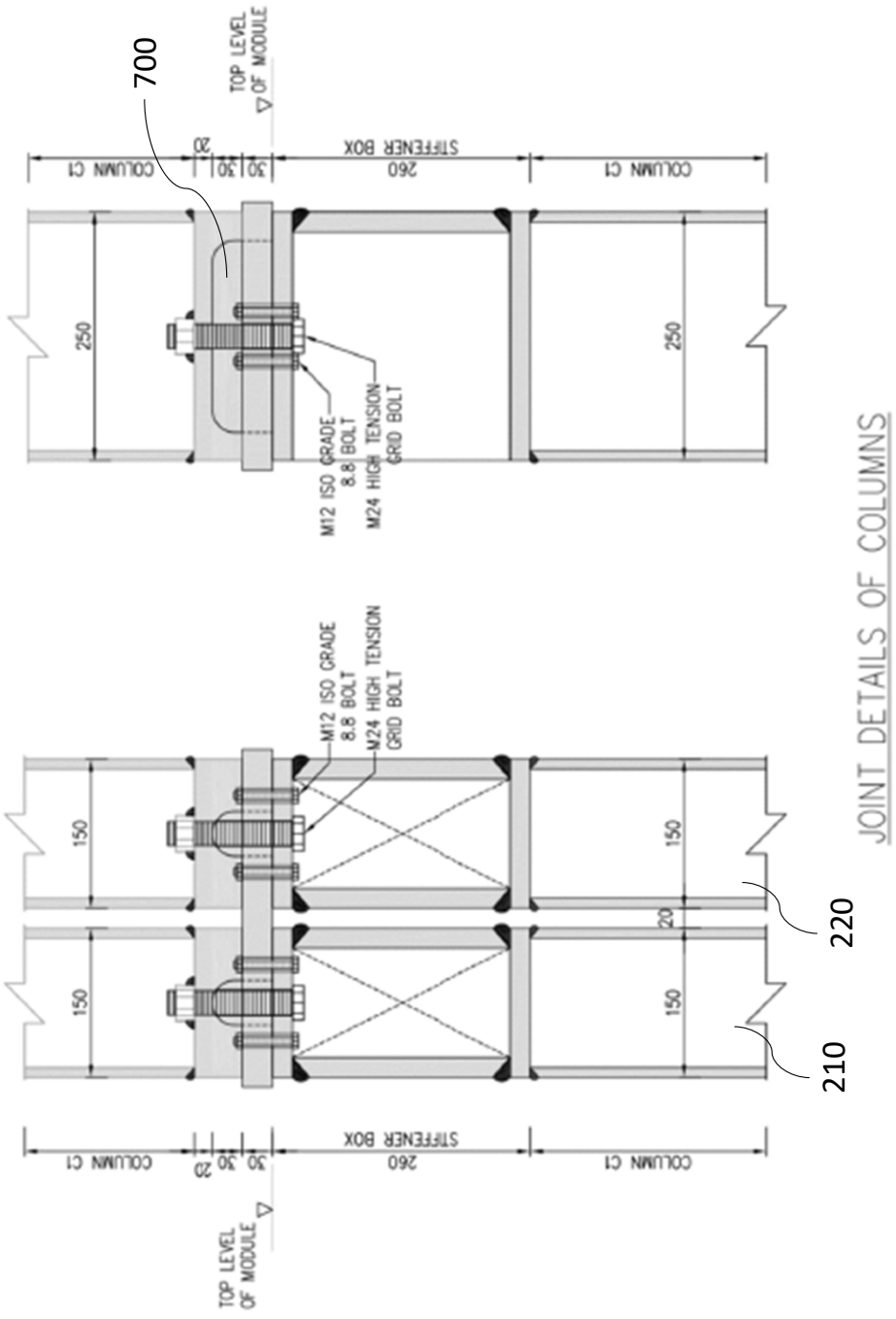
700
TOP LEVEL OF MODULE
COLUMN C1
20
30
30
STIFFENER BOX
260
COLUMN C1
250
250
M12 ISO GRADE 8.8 BOLT
M24 HIGH TENSION GRID BOLT
M12 ISO GRADE 8.8 BOLT
M24 HIGH TENSION GRID BOLT
150
150
20
150
150
220
210
COLUMN C1
25
30
30
STIFFENER BOX
260
COLUMN C1
TOP LEVEL OF MODULE
JOINT DETAILS OF COLUMNS

FIG. 17(a)