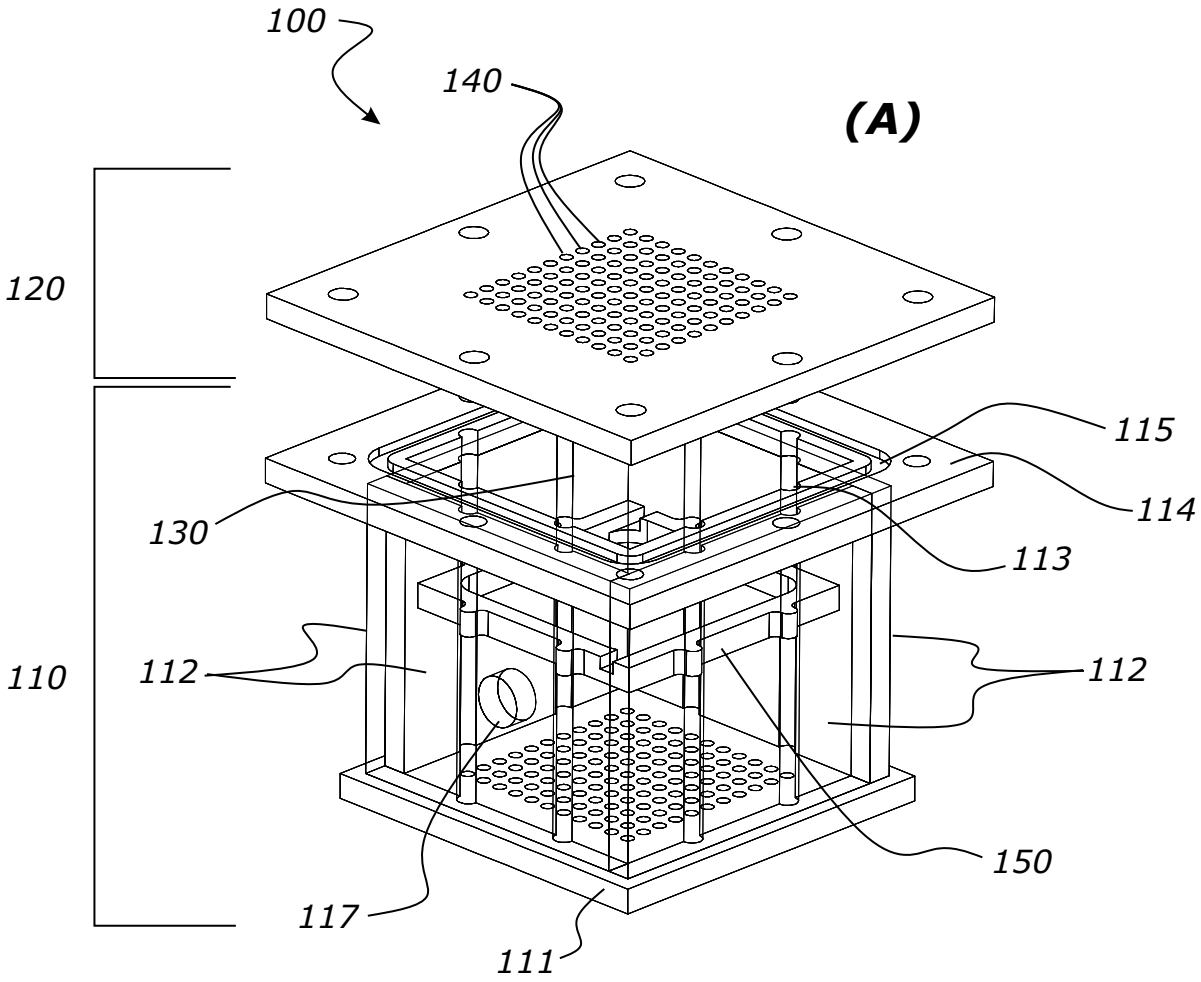

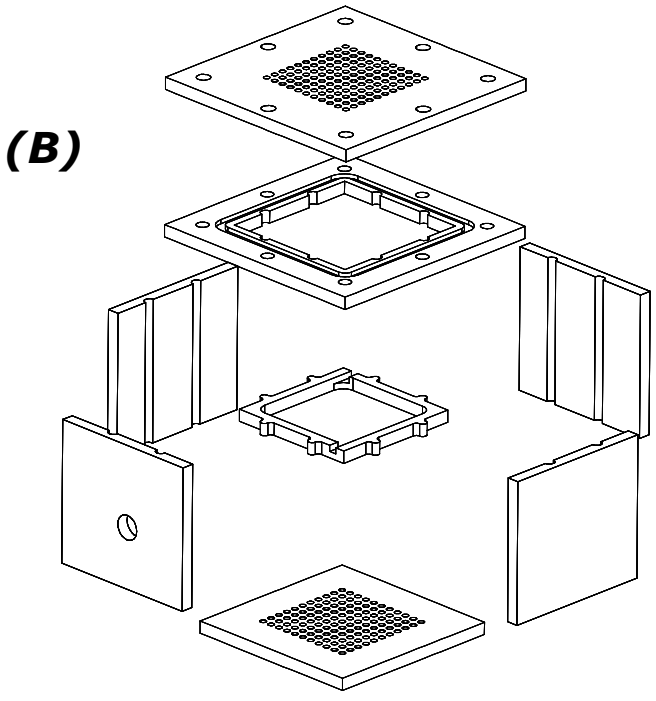

FIGURE 1

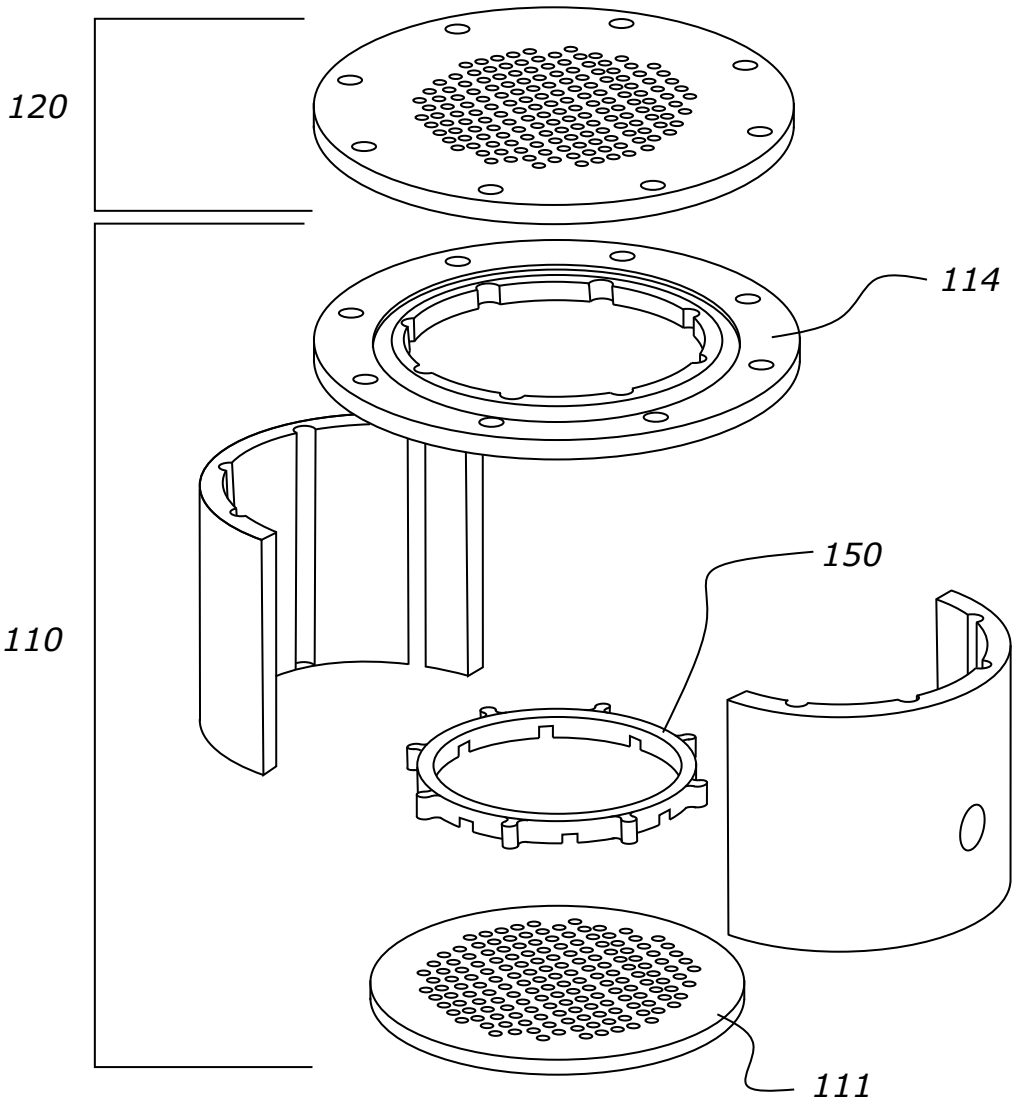

FIGURE 2

(A)

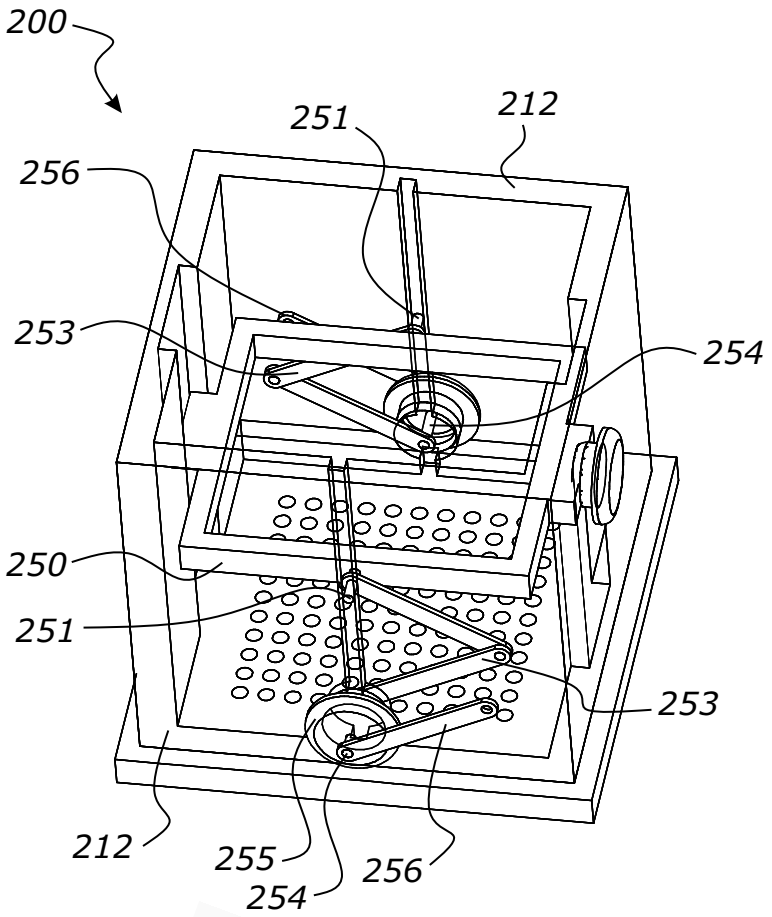

(B)

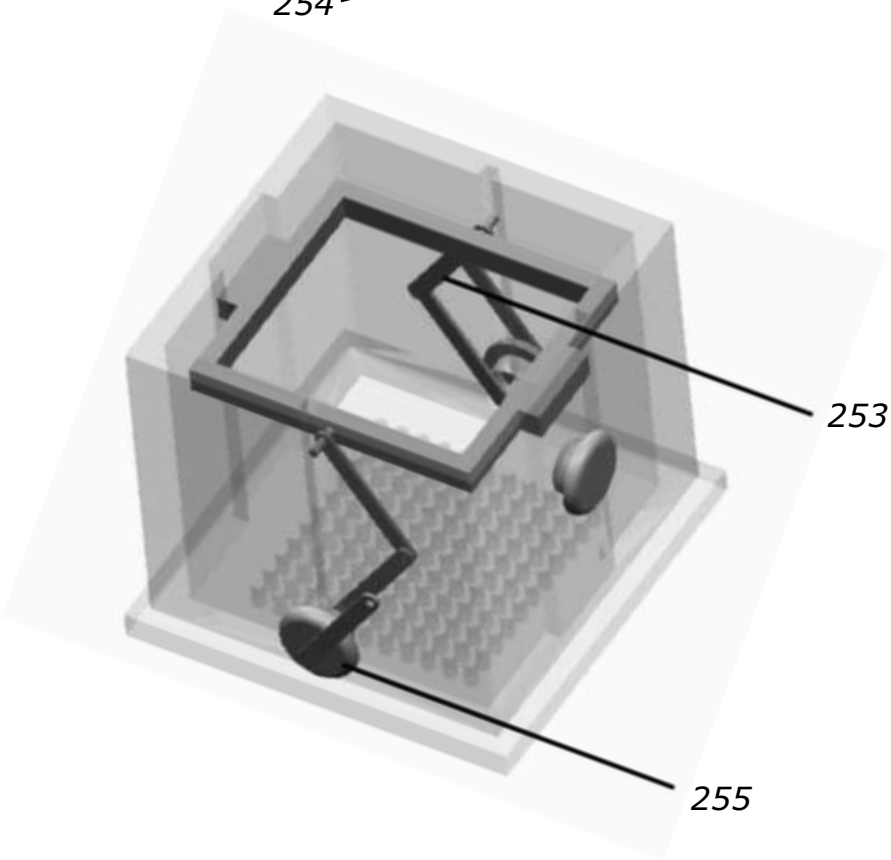

FIGURE 3

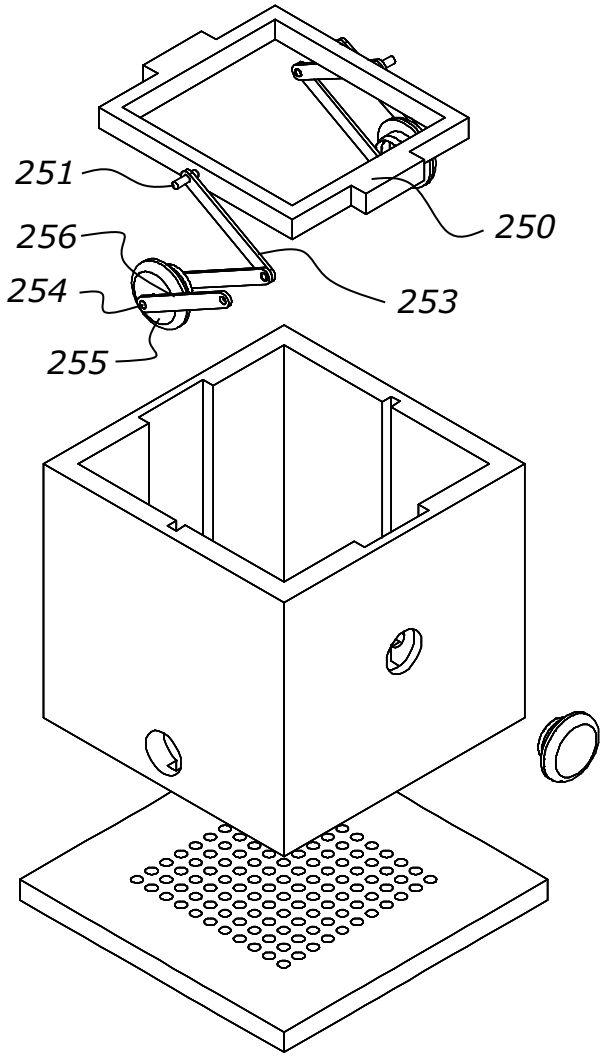

(C)

FIGURE 3*(continued)*

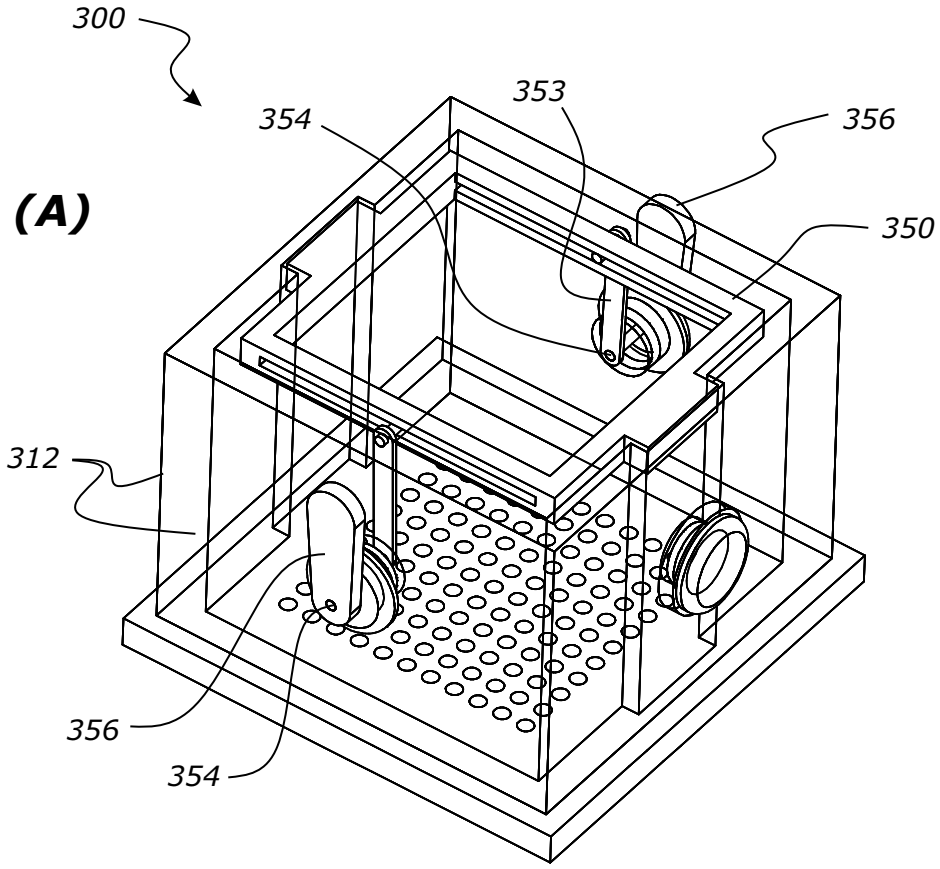

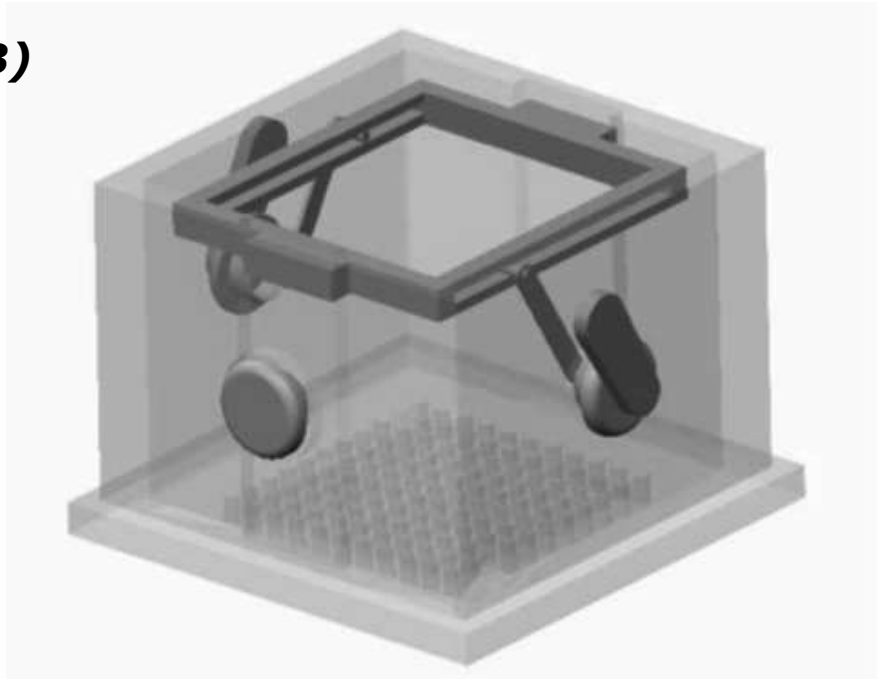

FIGURE 4

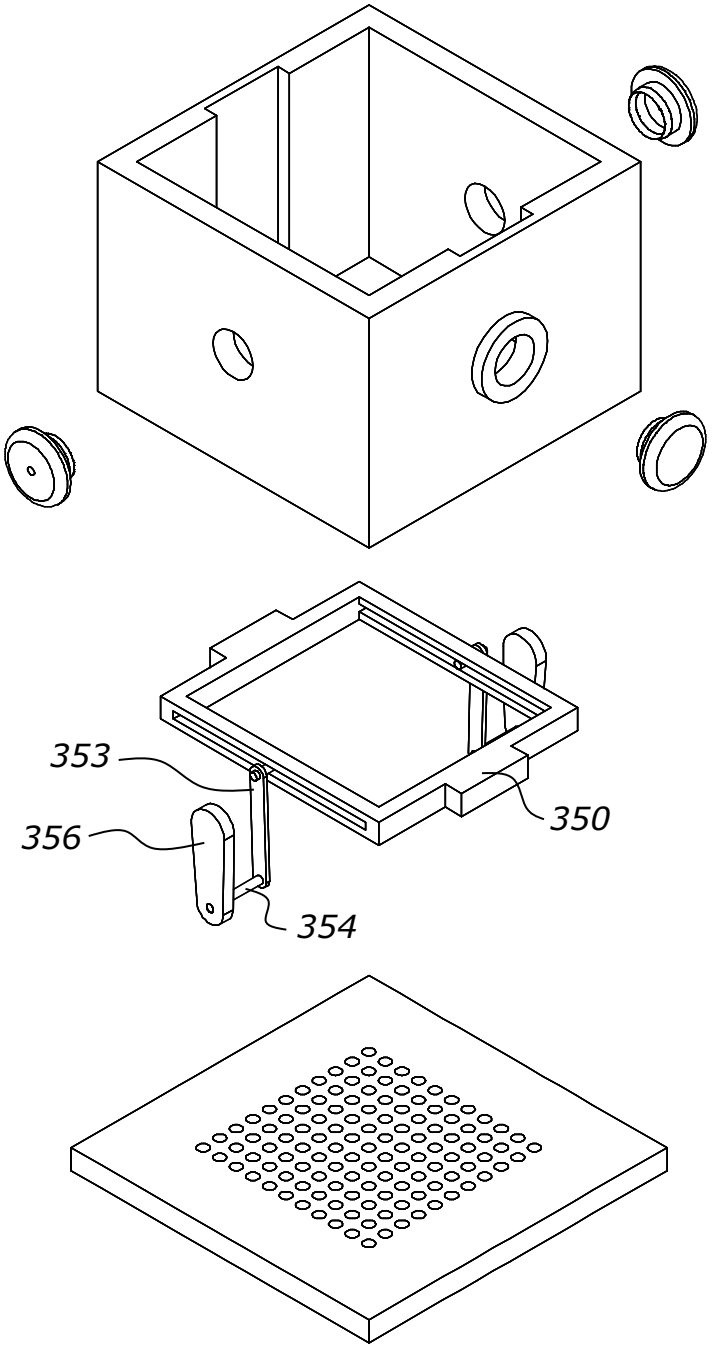

(C)

FIGURE 4(continued)

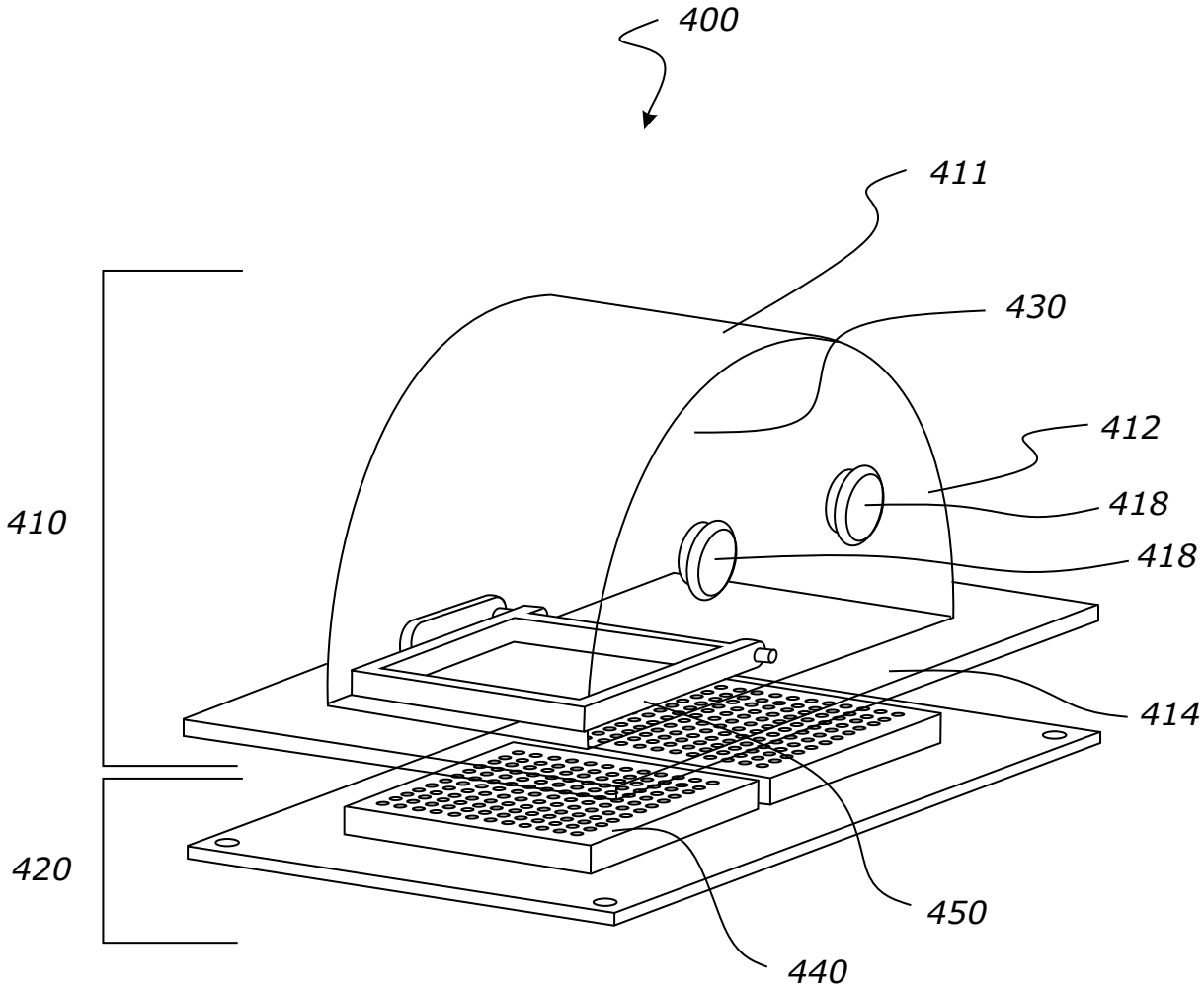

FIGURE 5

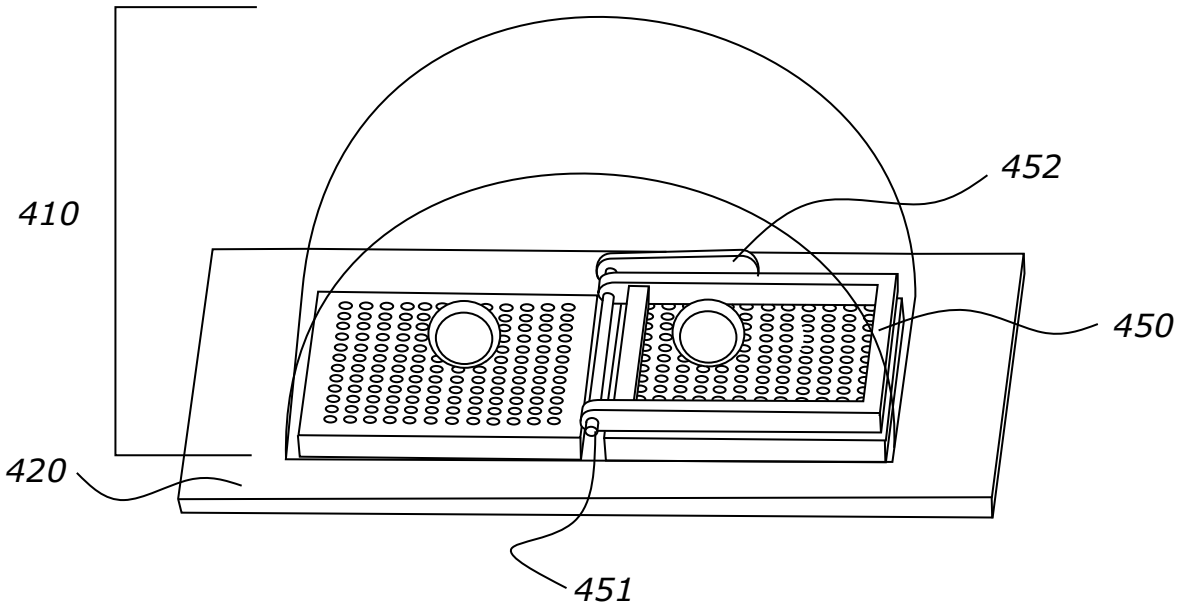

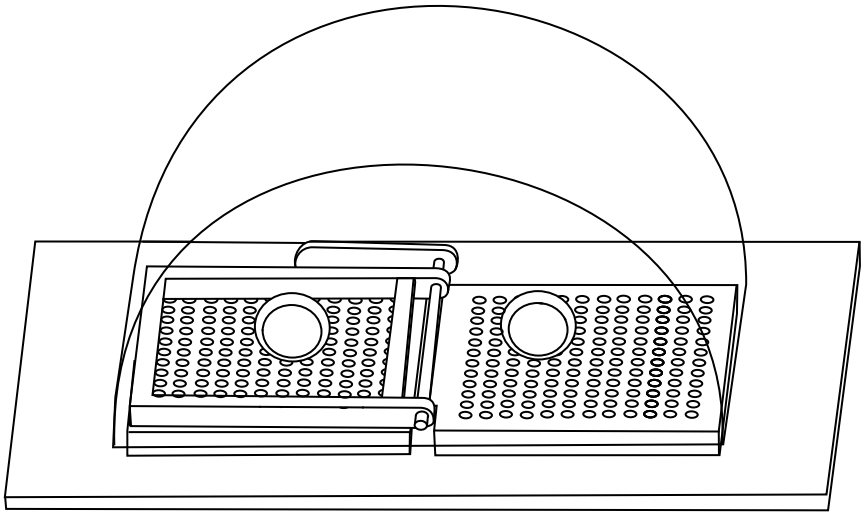

FIGURE 6

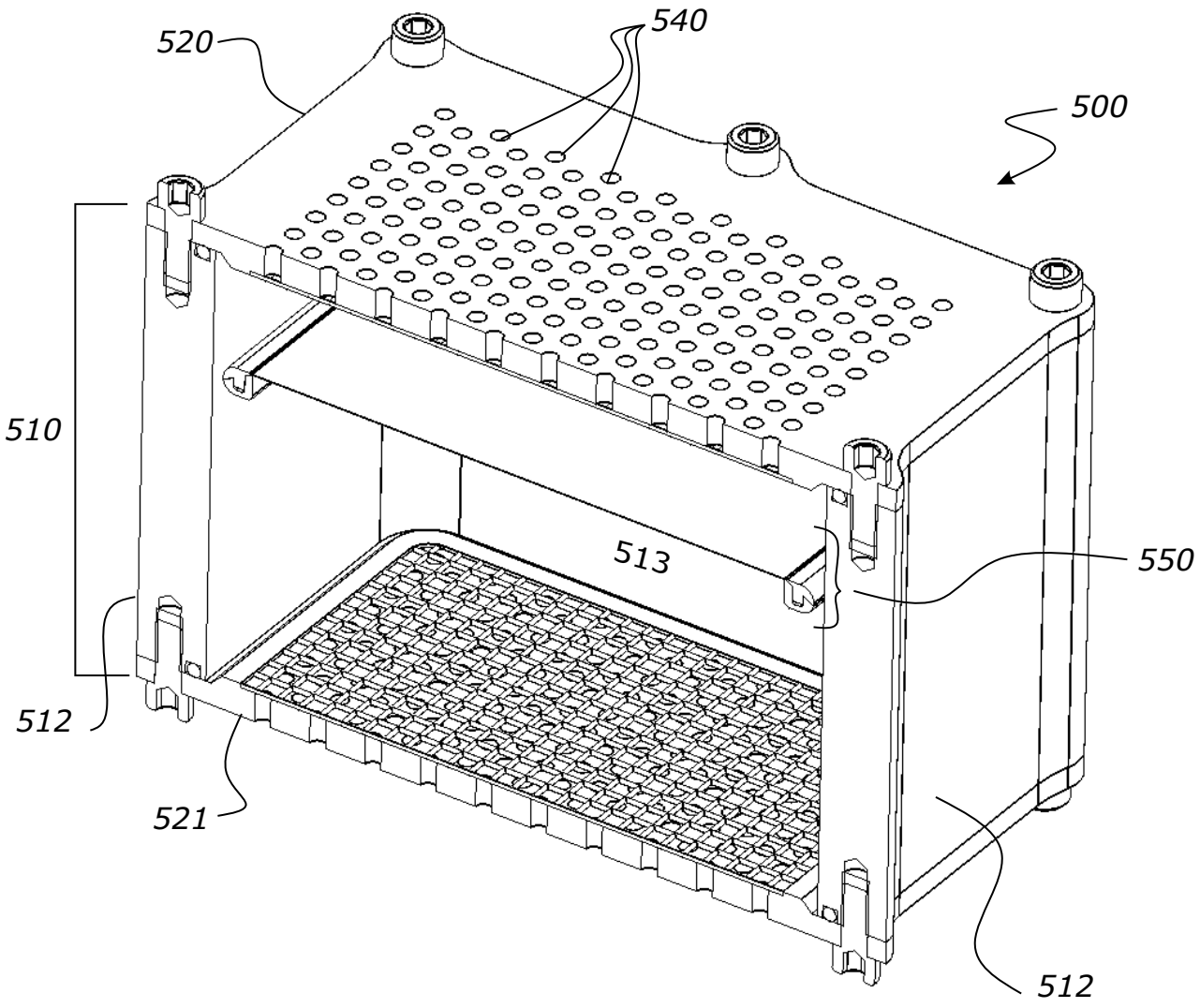

FIGURE 7

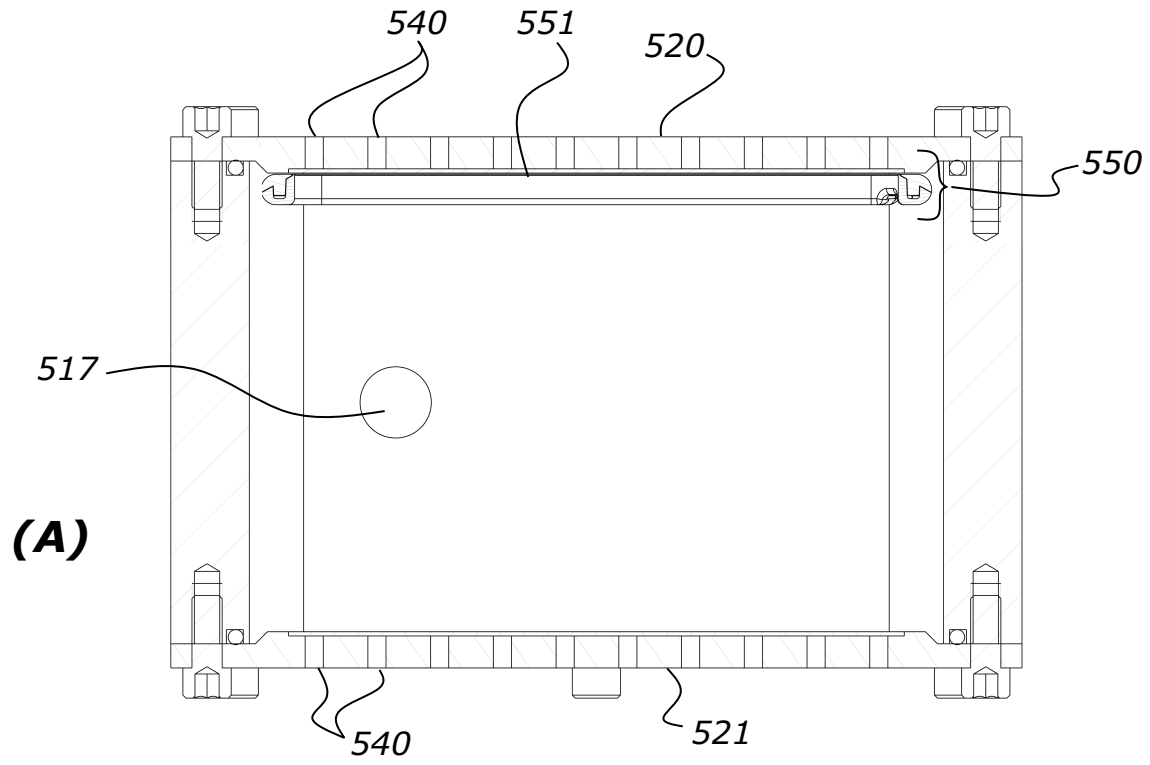

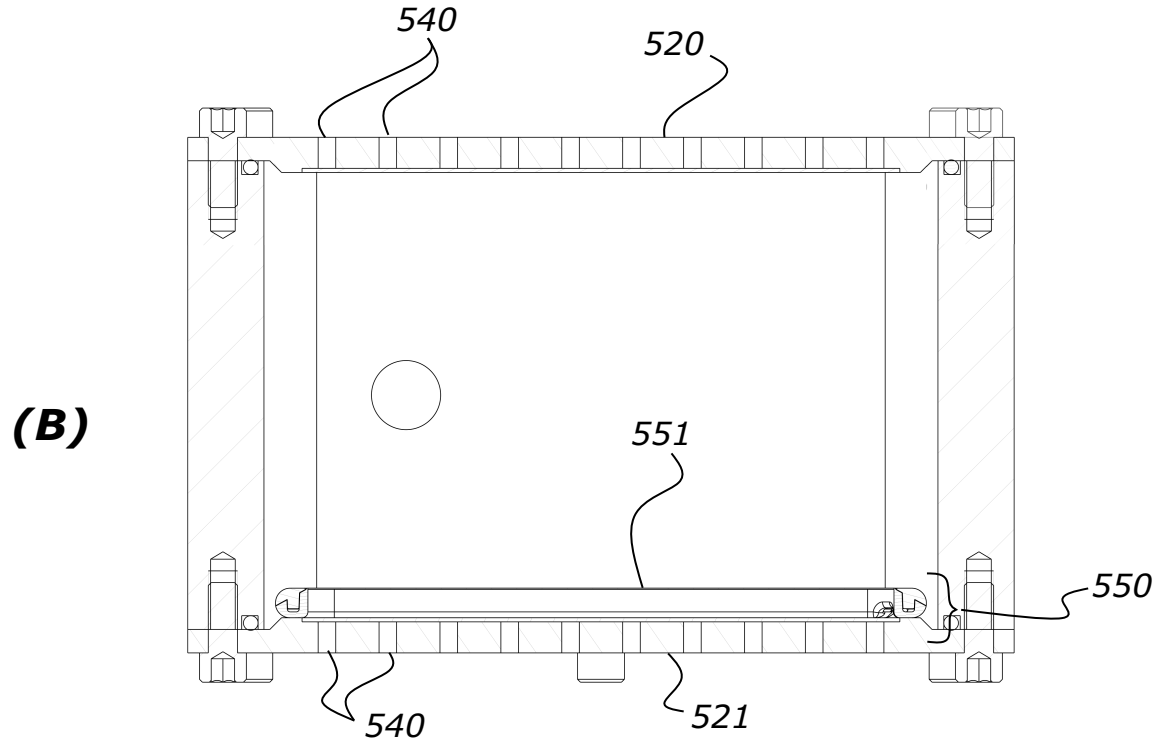

FIGURE 8

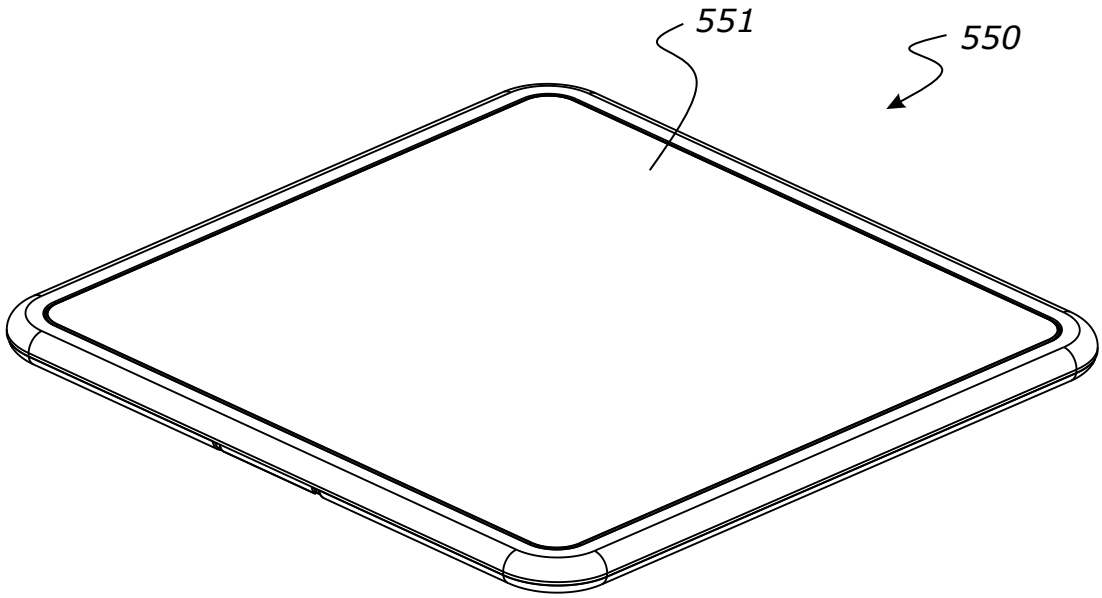

FIGURE 9

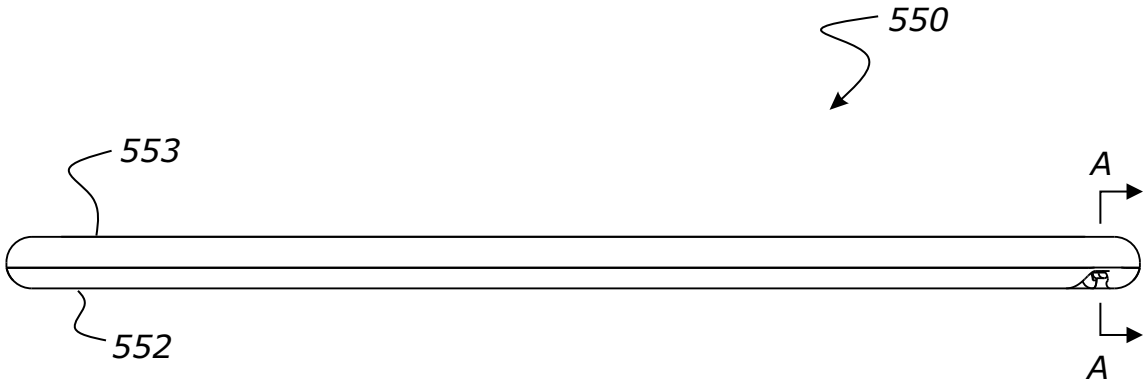

FIGURE 10

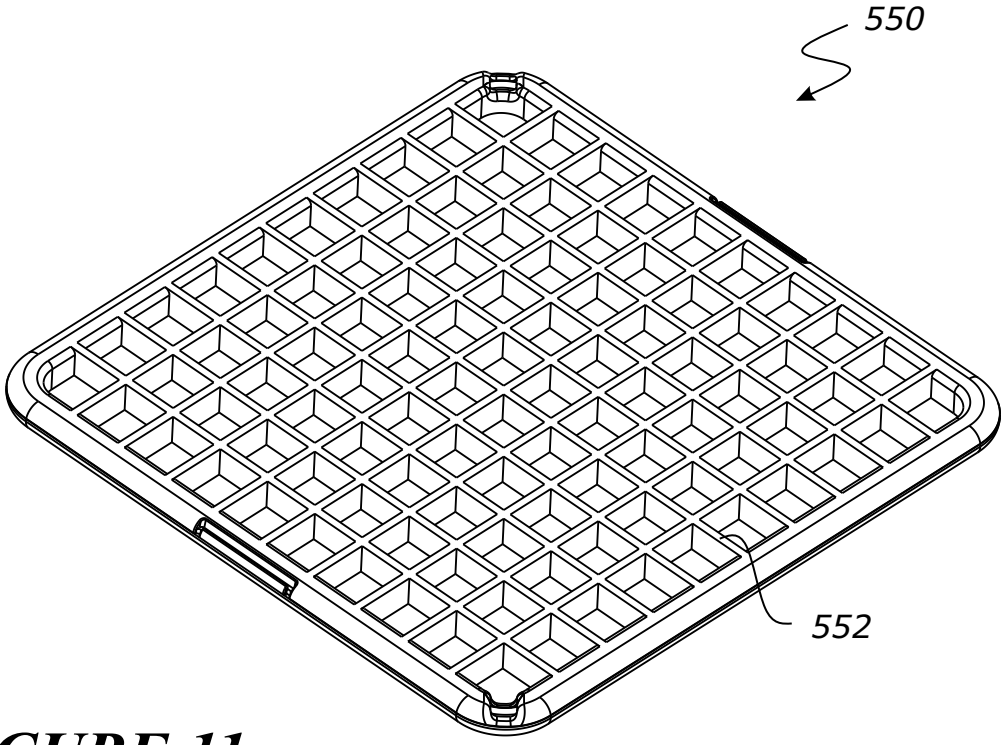

FIGURE 11

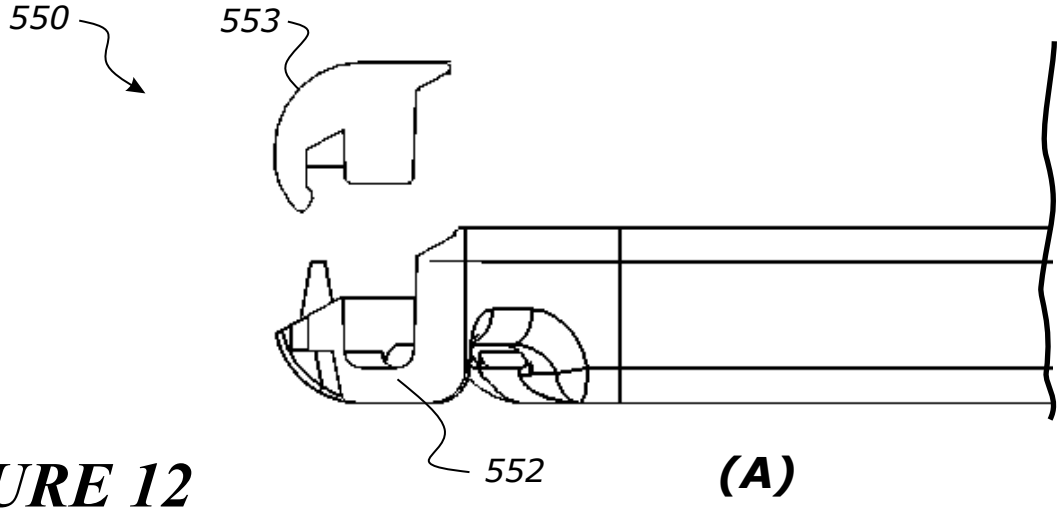

FIGURE 12

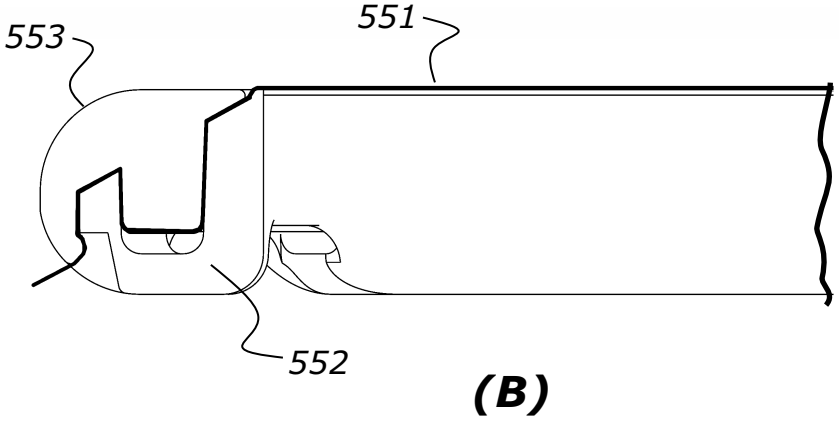

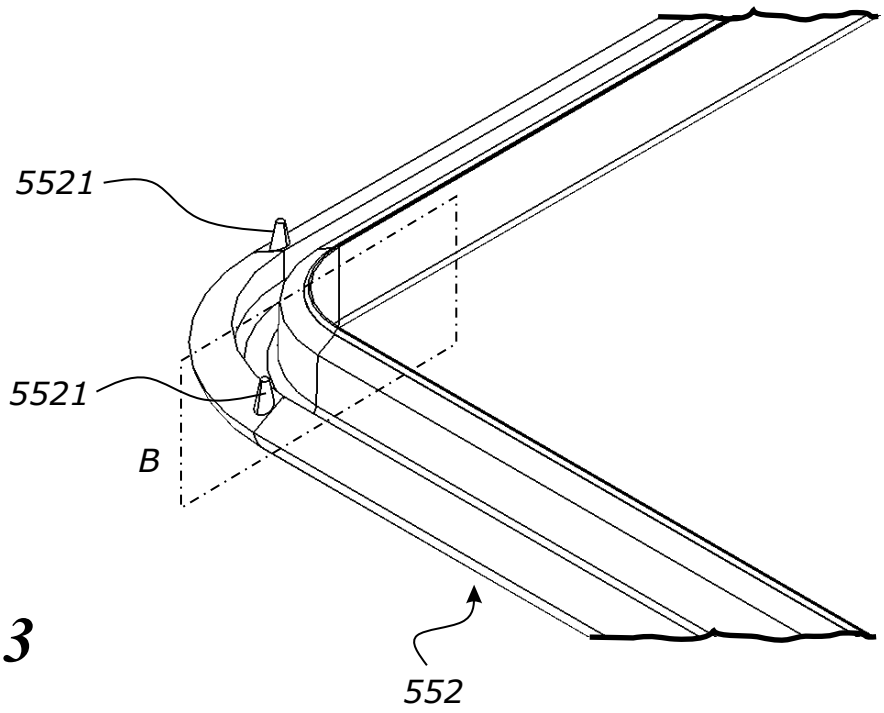

FIGURE 13

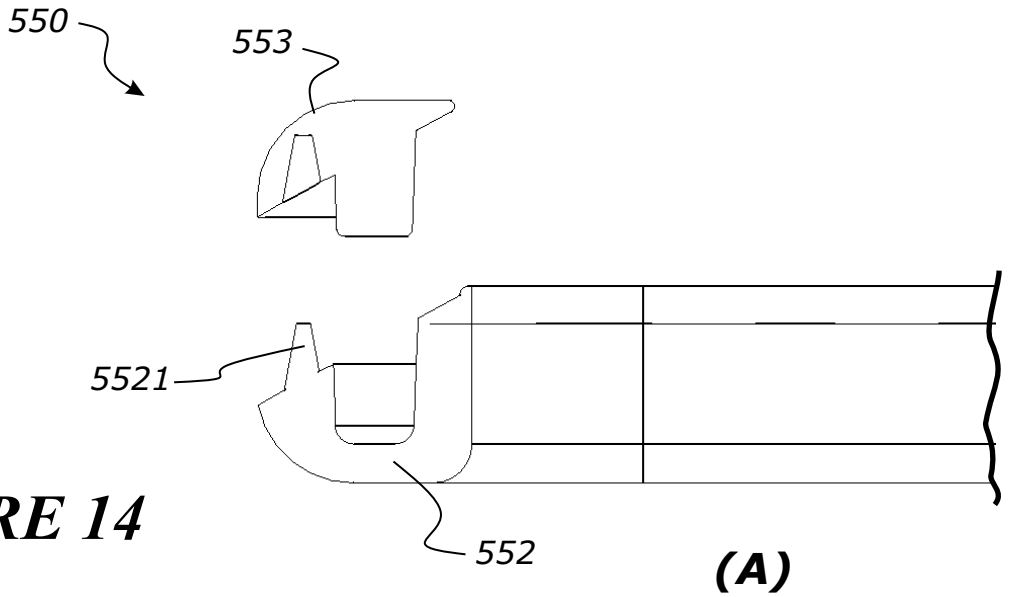

FIGURE 14

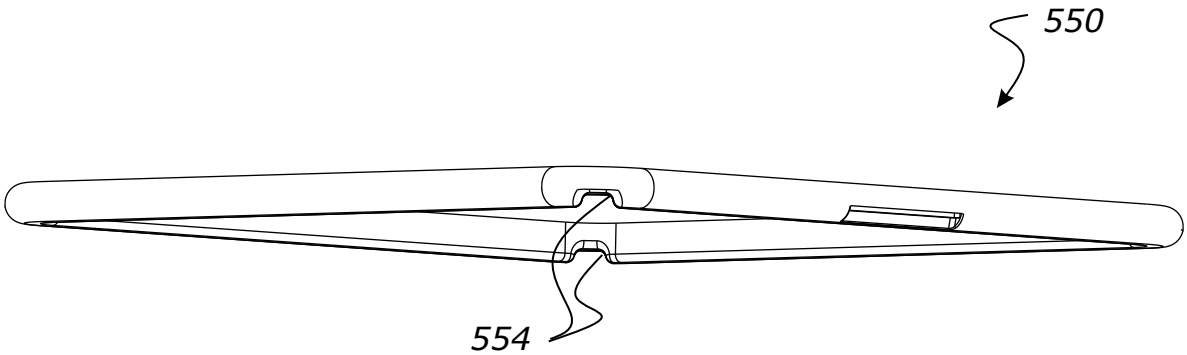

FIGURE 15

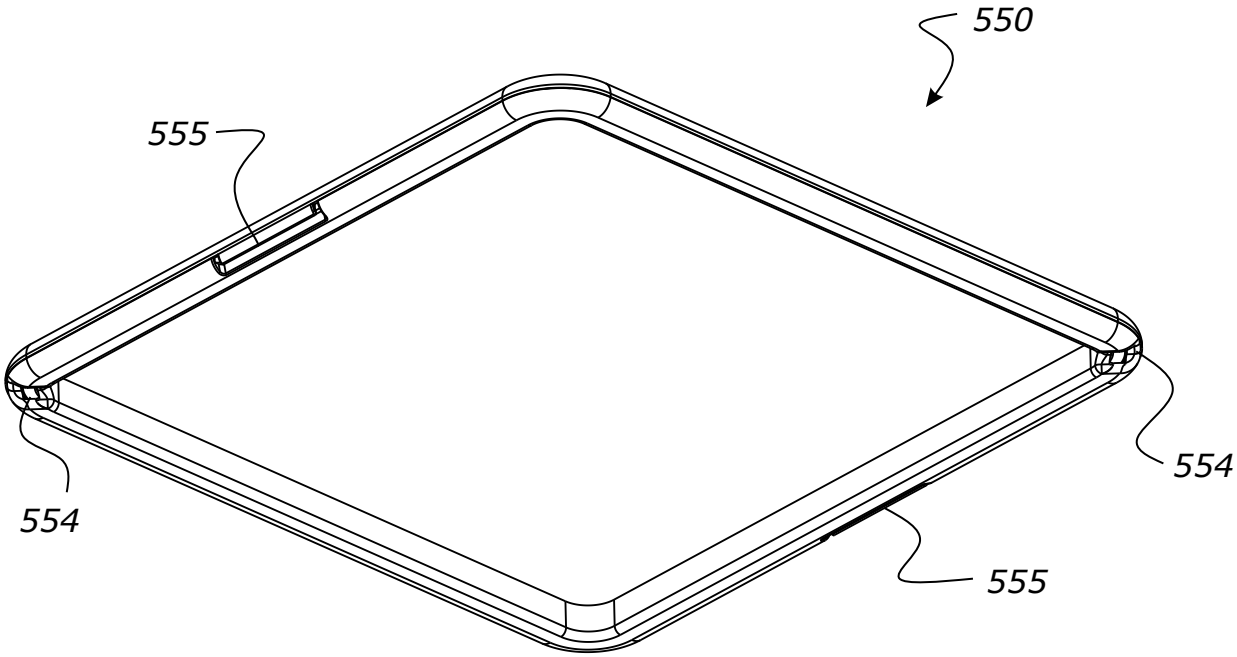

FIGURE 16

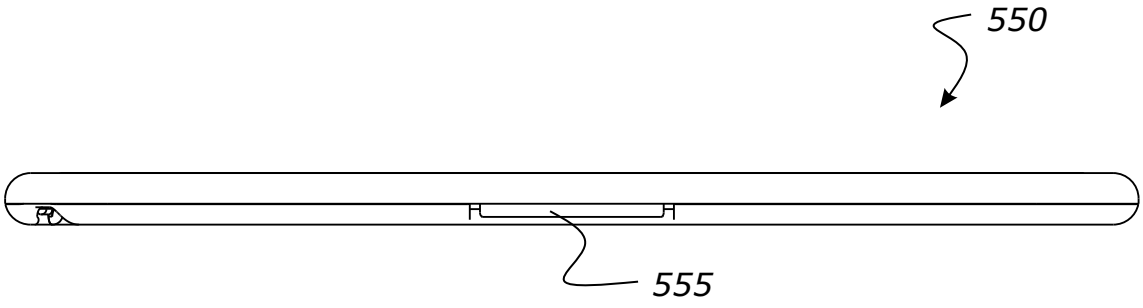

FIGURE 17