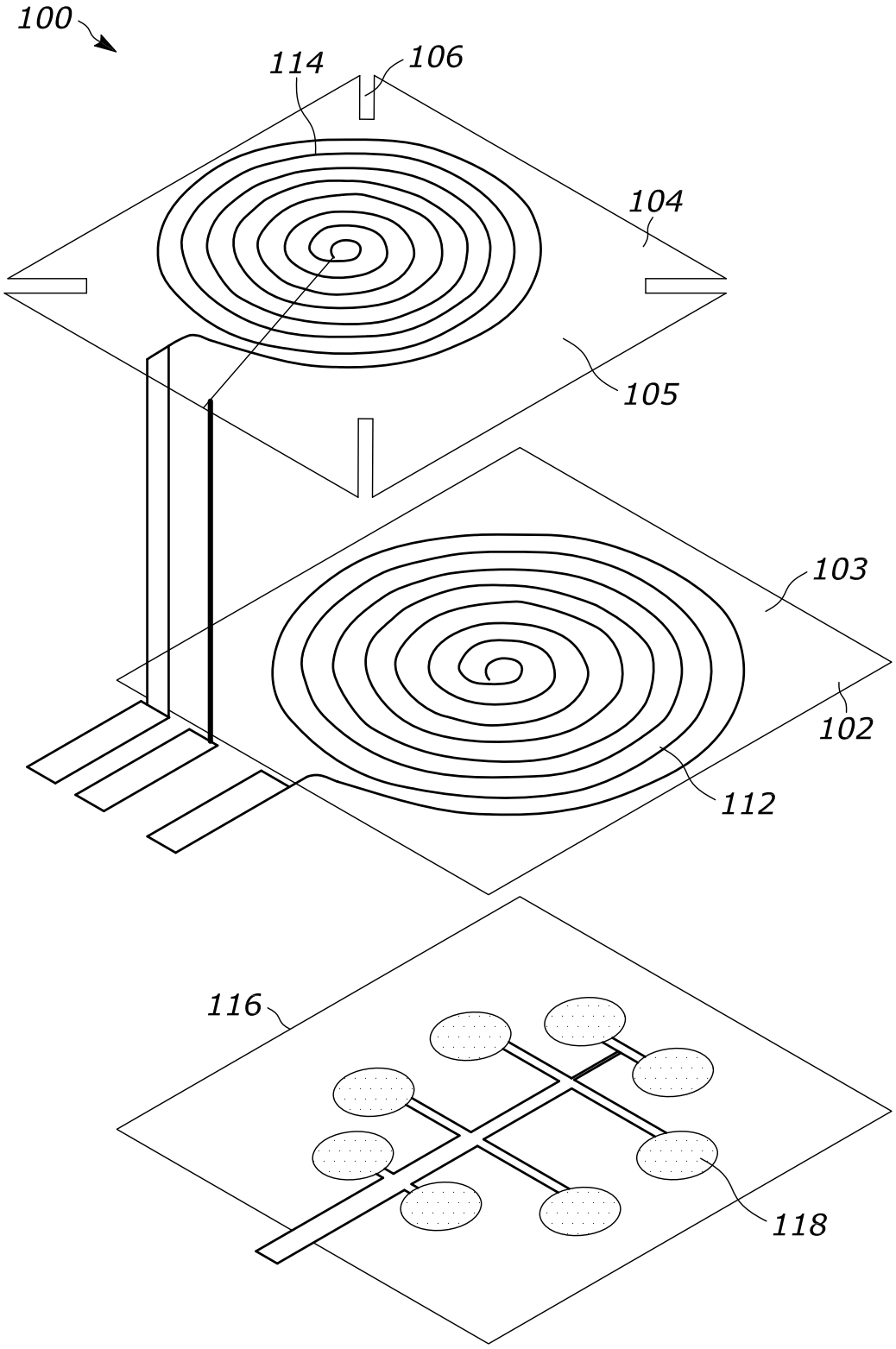

FIG. 1A

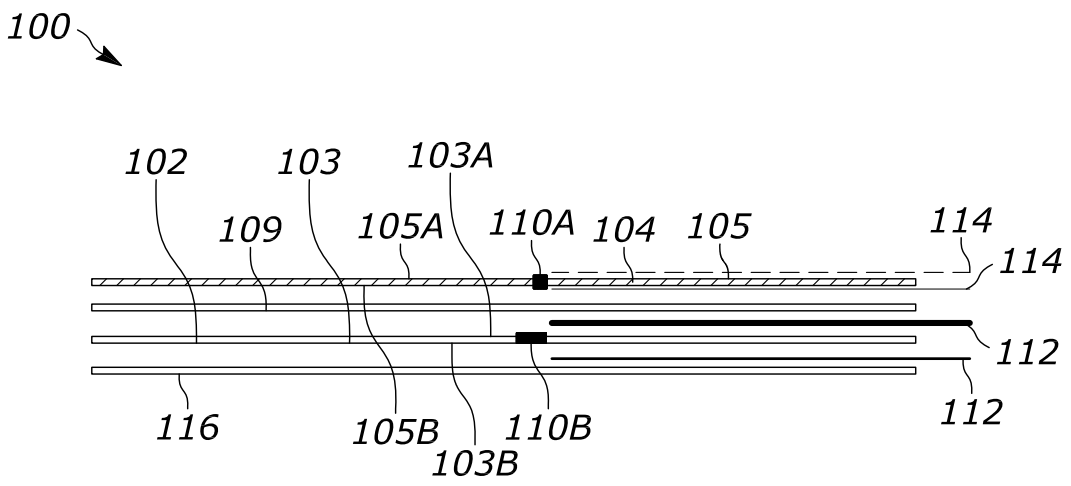
100
102
103
103A
109
105A
110A
104
105
114
114
112
112
116
105B
110B
103B

FIG. 1B

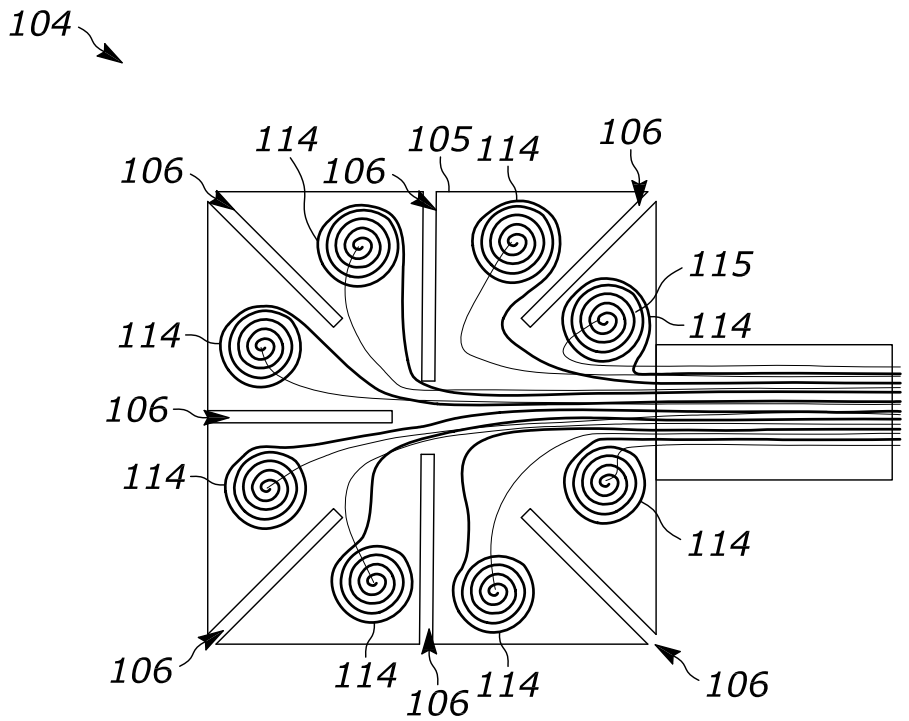
104
114
105
114
106
106
106
115
114
114
106
114
114
106
106
114
106
114
106

FIG. 2

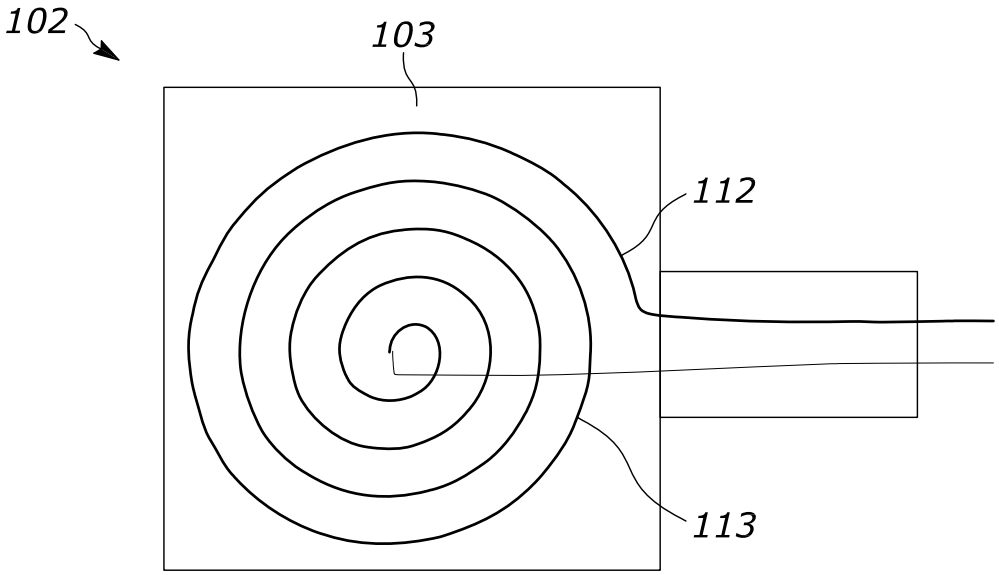

FIG. 3

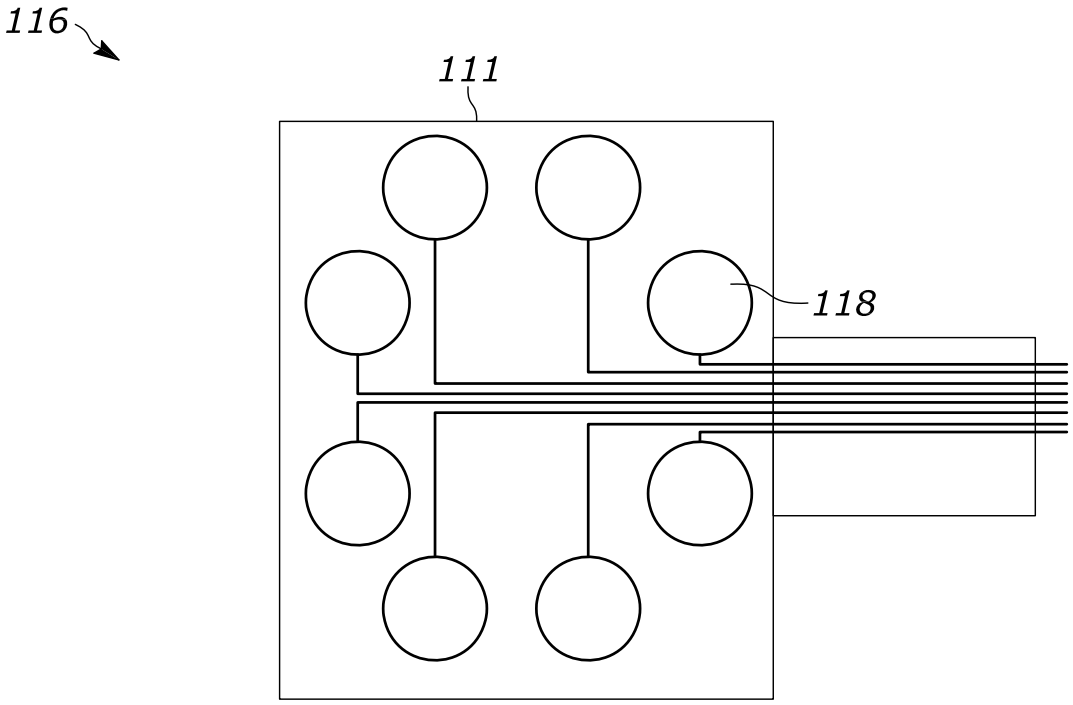

FIG. 4

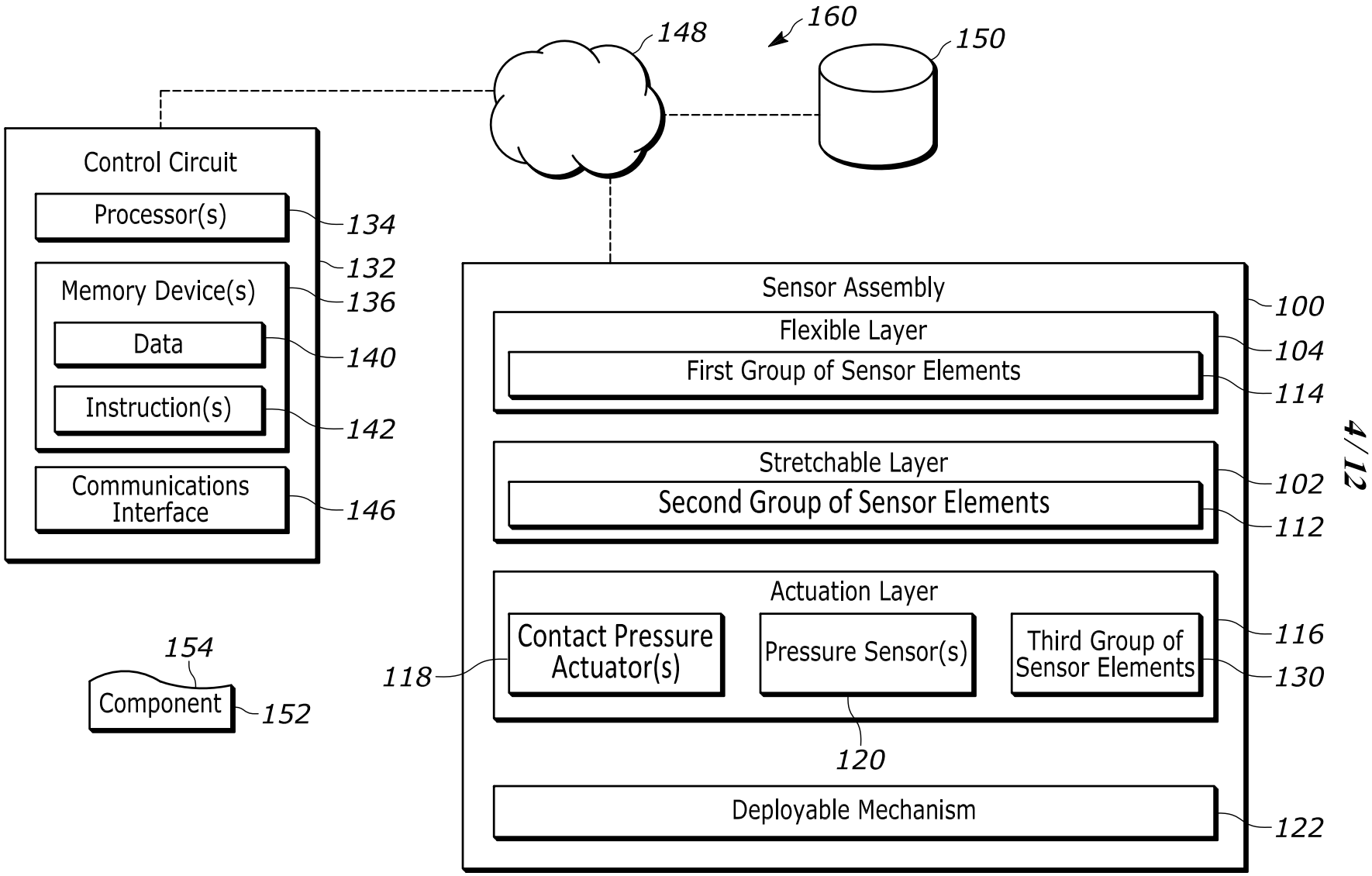
148
160
150
Control Circuit
Processor(s)
134
132
Memory Device(s)
136
Data
140
Instruction(s)
142
Communications Interface
146
154
Component
152
Sensor Assembly
100
Flexible Layer
104
First Group of Sensor Elements
114
Stretchable Layer
102
Second Group of Sensor Elements
112
Actuation Layer
116
Contact Pressure Actuator(s)
118
Pressure Sensor(s)
120
Third Group of Sensor Elements
130
Deployable Mechanism
122

FIG. 5

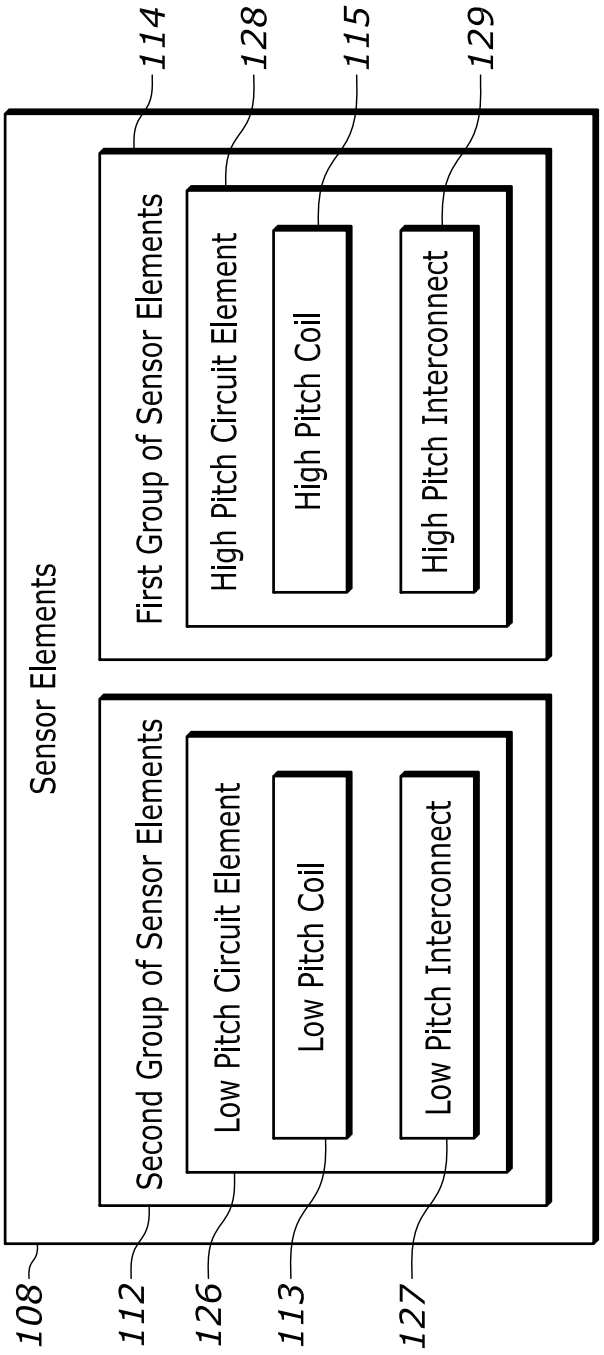
Sensor Elements
First Group of Sensor Elements
High Pitch Circuit Element
High Pitch Coil
High Pitch Interconnect
Second Group of Sensor Elements
Low Pitch Circuit Element
Low Pitch Coil
Low Pitch Interconnect
108
112
126
113
127
114
128
115
129

FIG. 6

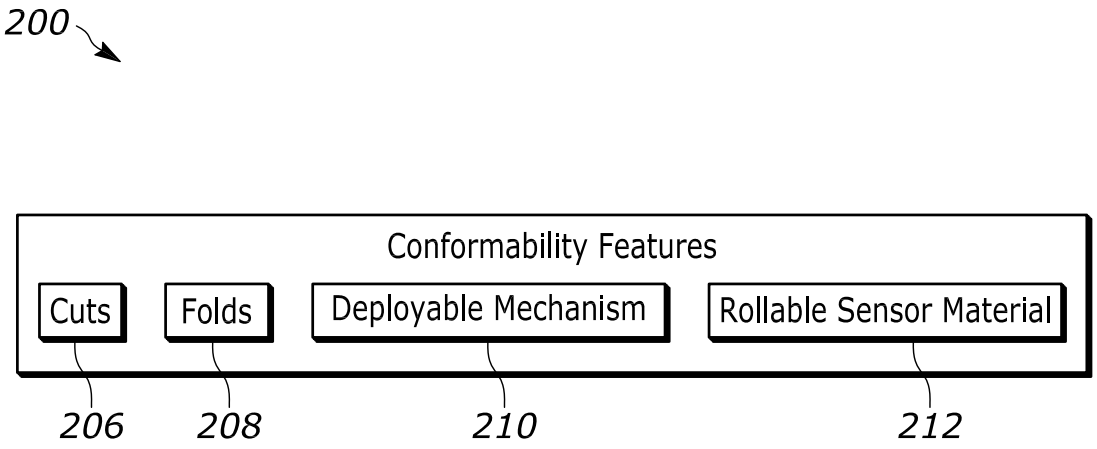
200
Conformability Features
Cuts
Folds
Deployable Mechanism
Rollable Sensor Material
206
208
210
212

FIG. 7

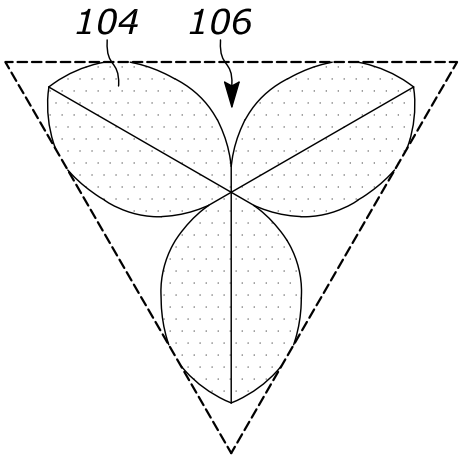

FIG. 8A

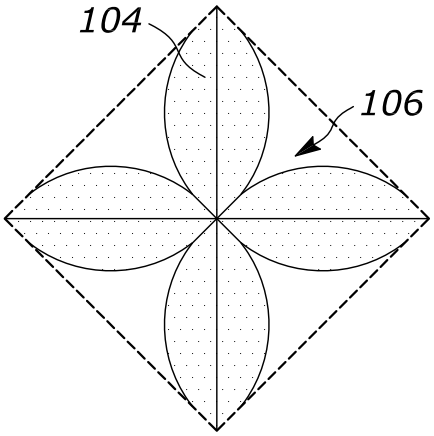

FIG. 8B

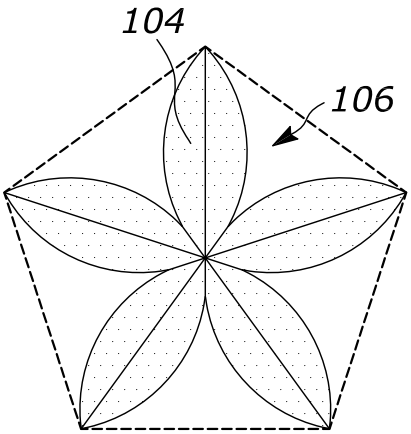

FIG. 8C

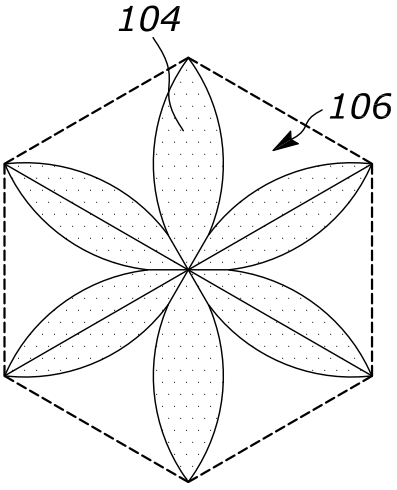

FIG. 8D

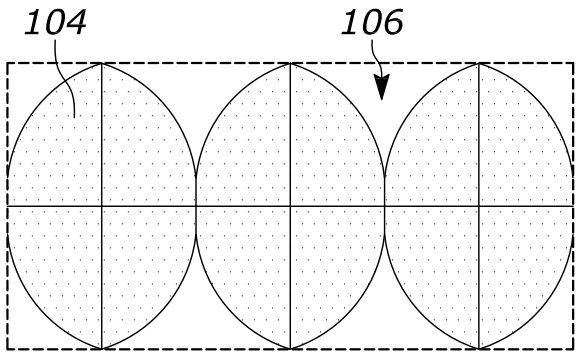

FIG. 8E

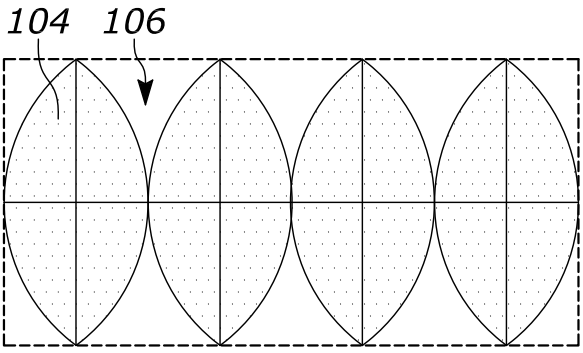

FIG. 8F

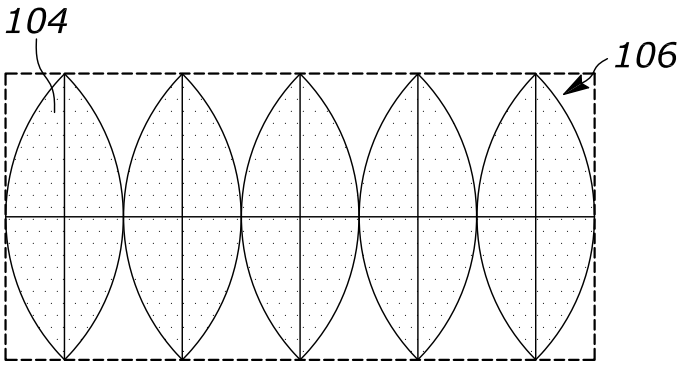

FIG. 8G

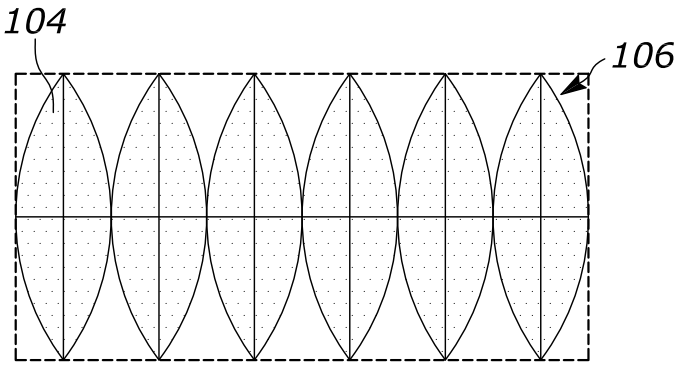

FIG. 8H

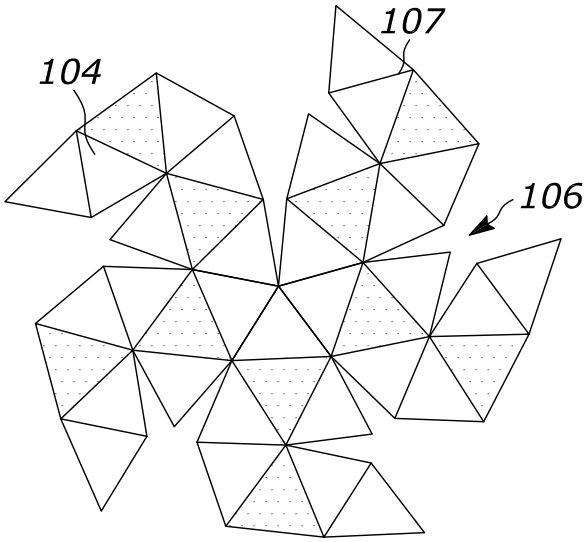

FIG. 8I

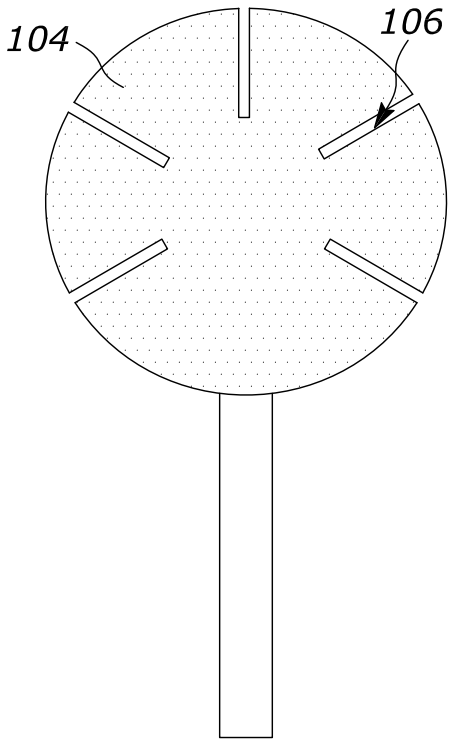

FIG. 8J

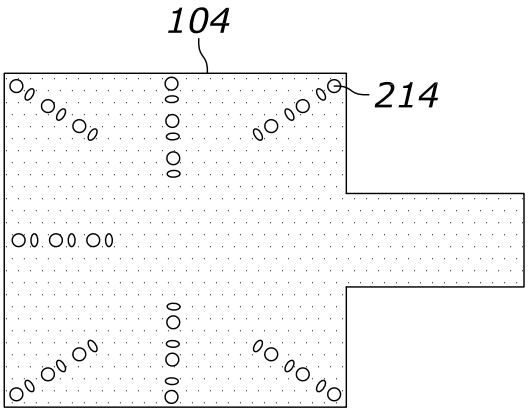

FIG. 8K