FIG.1

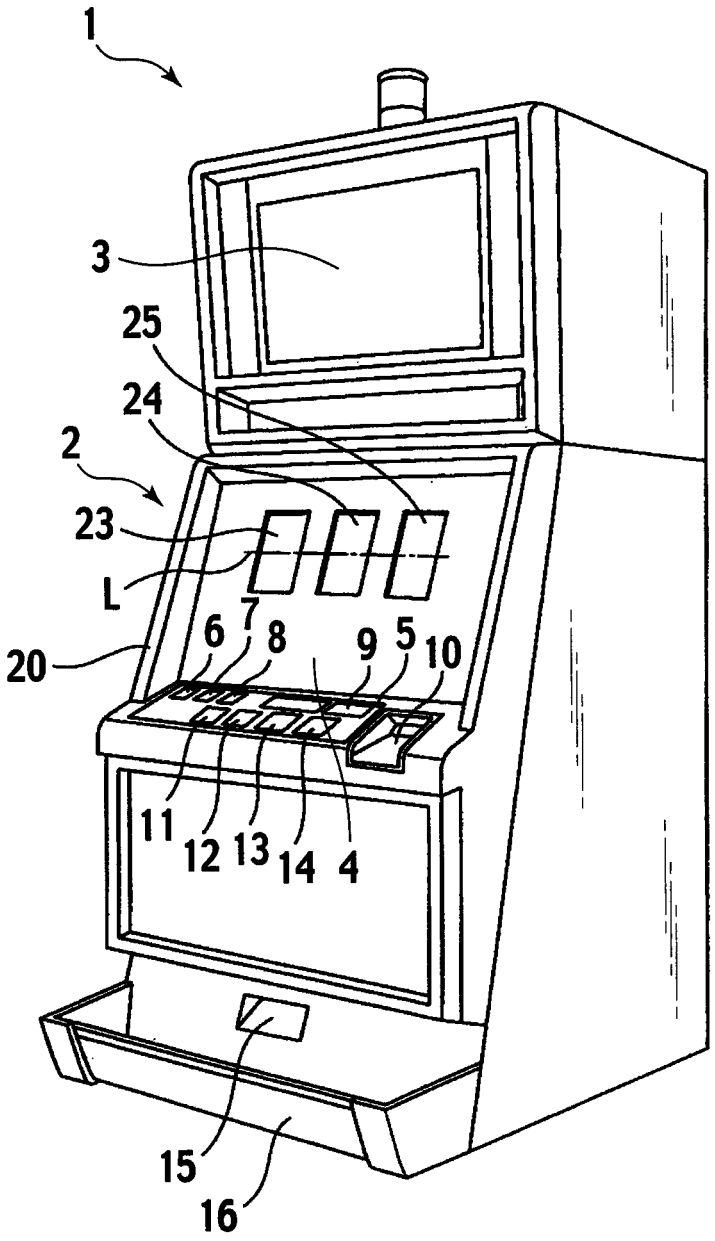

FIG.2

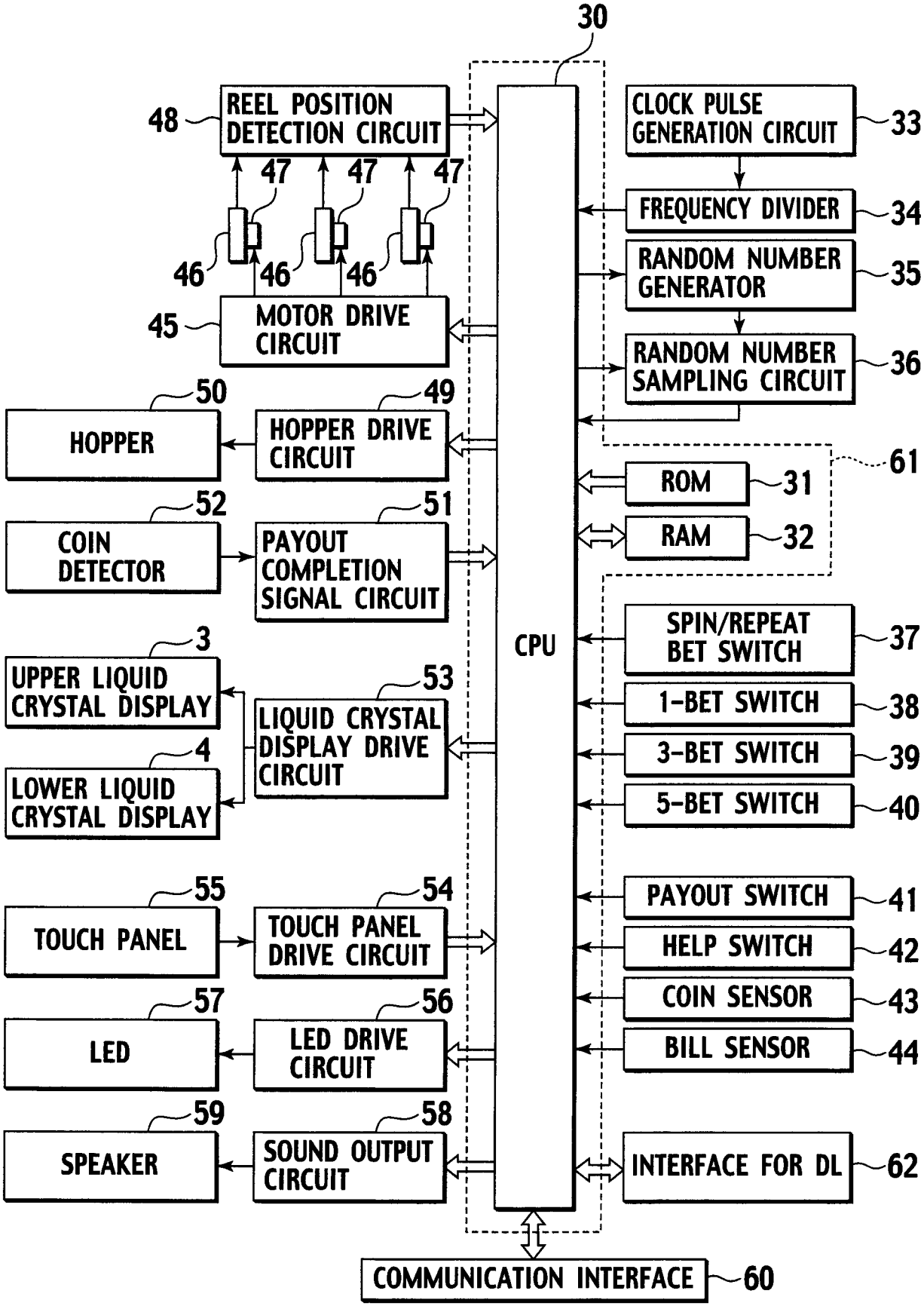
30
48
REEL POSITION DETECTION CIRCUIT
47
47
47
46
46
46
45
MOTOR DRIVE CIRCUIT
CLOCK PULSE GENERATION CIRCUIT
33
FREQUENCY DIVIDER
34
RANDOM NUMBER GENERATOR
35
RANDOM NUMBER SAMPLING CIRCUIT
36
50
HOPPER
49
HOPPER DRIVE CIRCUIT
61
ROM
31
RAM
32
52
COIN DETECTOR
51
PAYOUT COMPLETION SIGNAL CIRCUIT
CPU
SPIN/REPEAT BET SWITCH
37
1-BET SWITCH
38
3-BET SWITCH
39
5-BET SWITCH
40
3
UPPER LIQUID CRYSTAL DISPLAY
4
LOWER LIQUID CRYSTAL DISPLAY
53
LIQUID CRYSTAL DISPLAY DRIVE CIRCUIT
55
TOUCH PANEL
54
TOUCH PANEL DRIVE CIRCUIT
PAYOUT SWITCH
41
HELP SWITCH
42
COIN SENSOR
43
BILL SENSOR
44
57
LED
56
LED DRIVE CIRCUIT
59
SPEAKER
58
SOUND OUTPUT CIRCUIT
INTERFACE FOR DL
62
COMMUNICATION INTERFACE
60

FIG.3

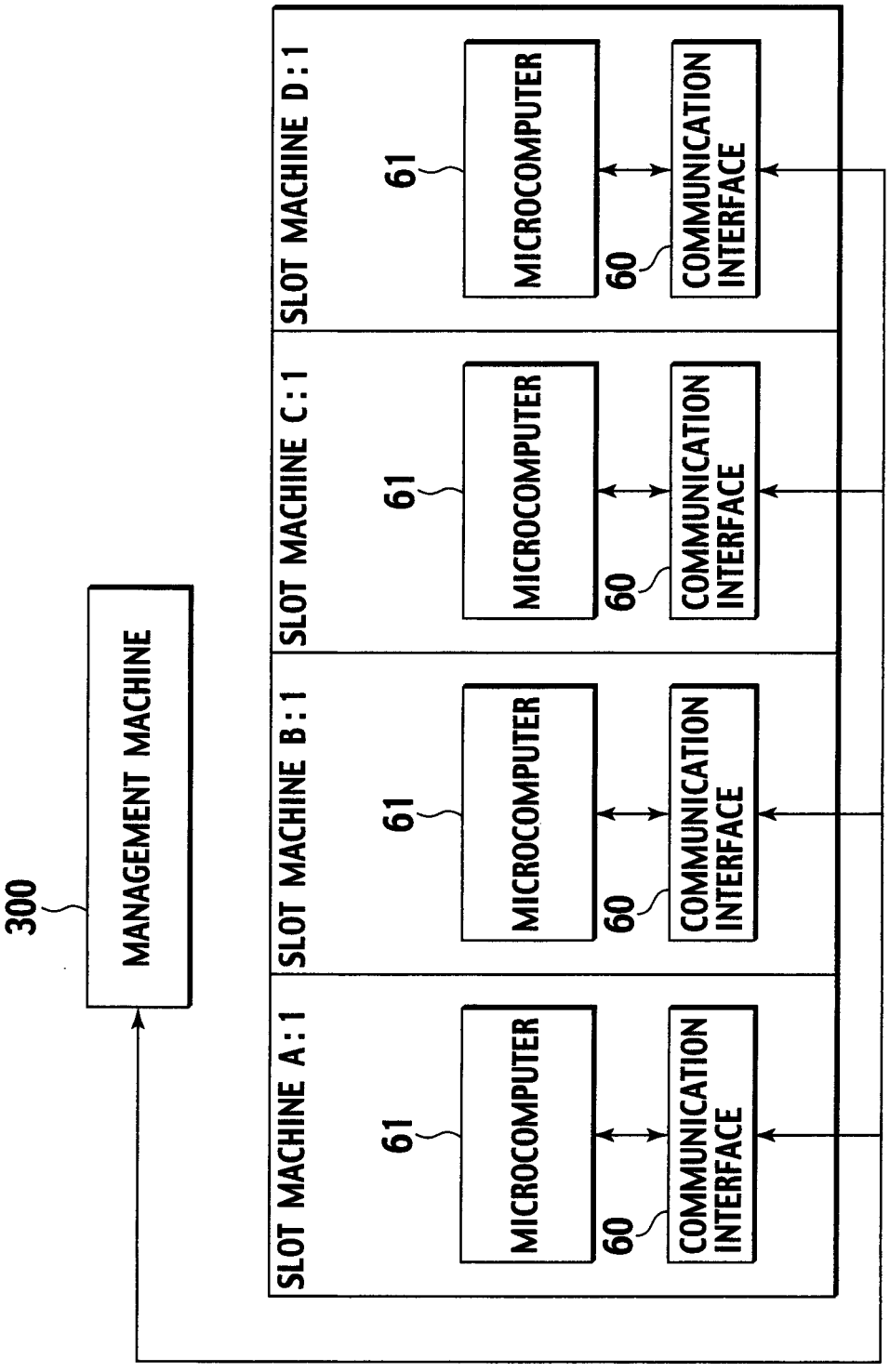
300
MANAGEMENT MACHINE
SLOT MACHINE A:1
SLOT MACHINE B:1
SLOT MACHINE C:1
SLOT MACHINE D:1
61
MICROCOMPUTER
60
COMMUNICATION INTERFACE

FIG.4

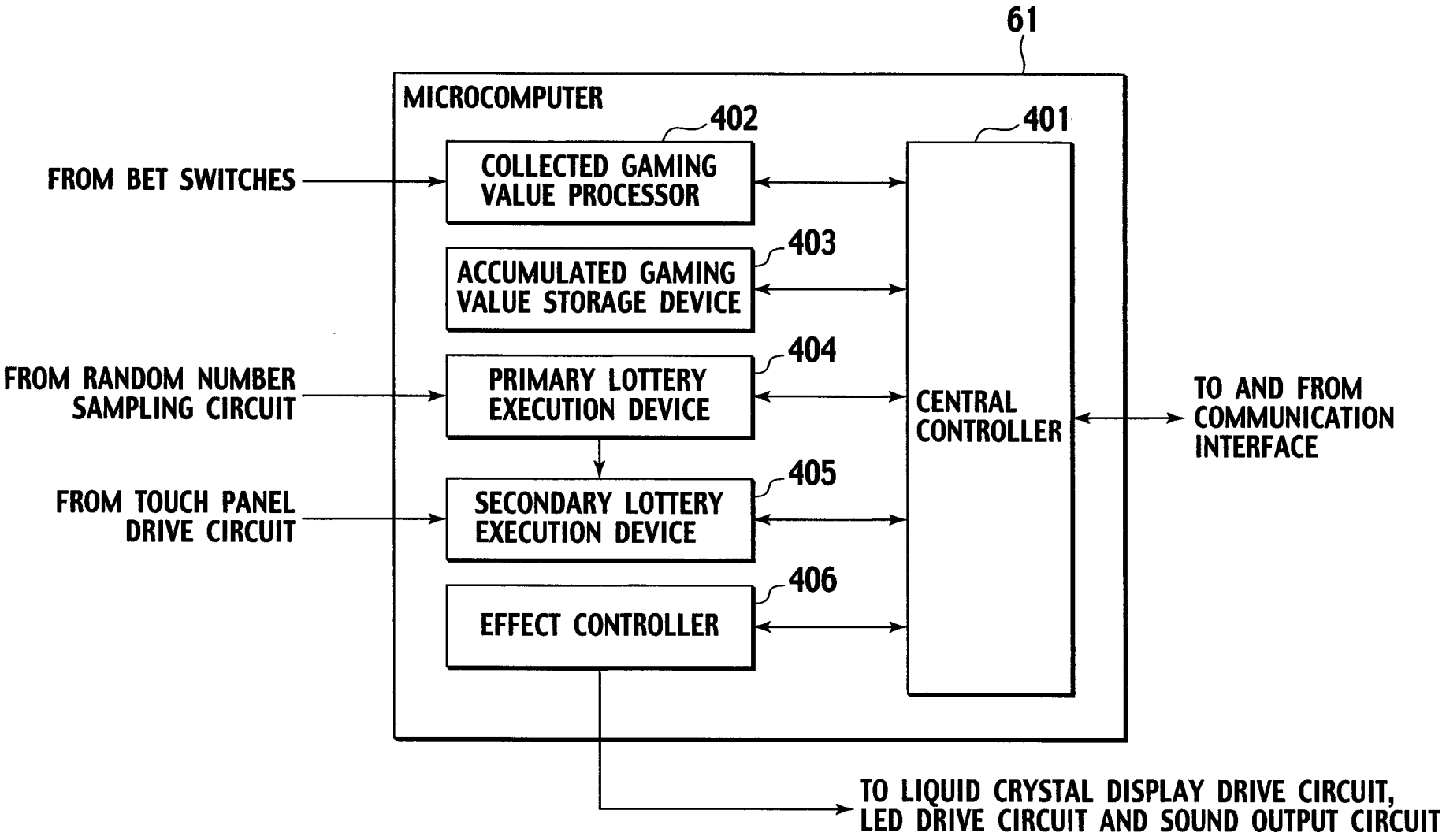
61
MICROCOMPUTER
402
401
FROM BET SWITCHES
COLLECTED GAMING VALUE PROCESSOR
403
ACCUMULATED GAMING VALUE STORAGE DEVICE
404
FROM RANDOM NUMBER SAMPLING CIRCUIT
PRIMARY LOTTERY EXECUTION DEVICE
CENTRAL CONTROLLER
TO AND FROM COMMUNICATION INTERFACE
405
FROM TOUCH PANEL DRIVE CIRCUIT
SECONDARY LOTTERY EXECUTION DEVICE
406
EFFECT CONTROLLER
TO LIQUID CRYSTAL DISPLAY DRIVE CIRCUIT, LED DRIVE CIRCUIT AND SOUND OUTPUT CIRCUIT

FIG.5

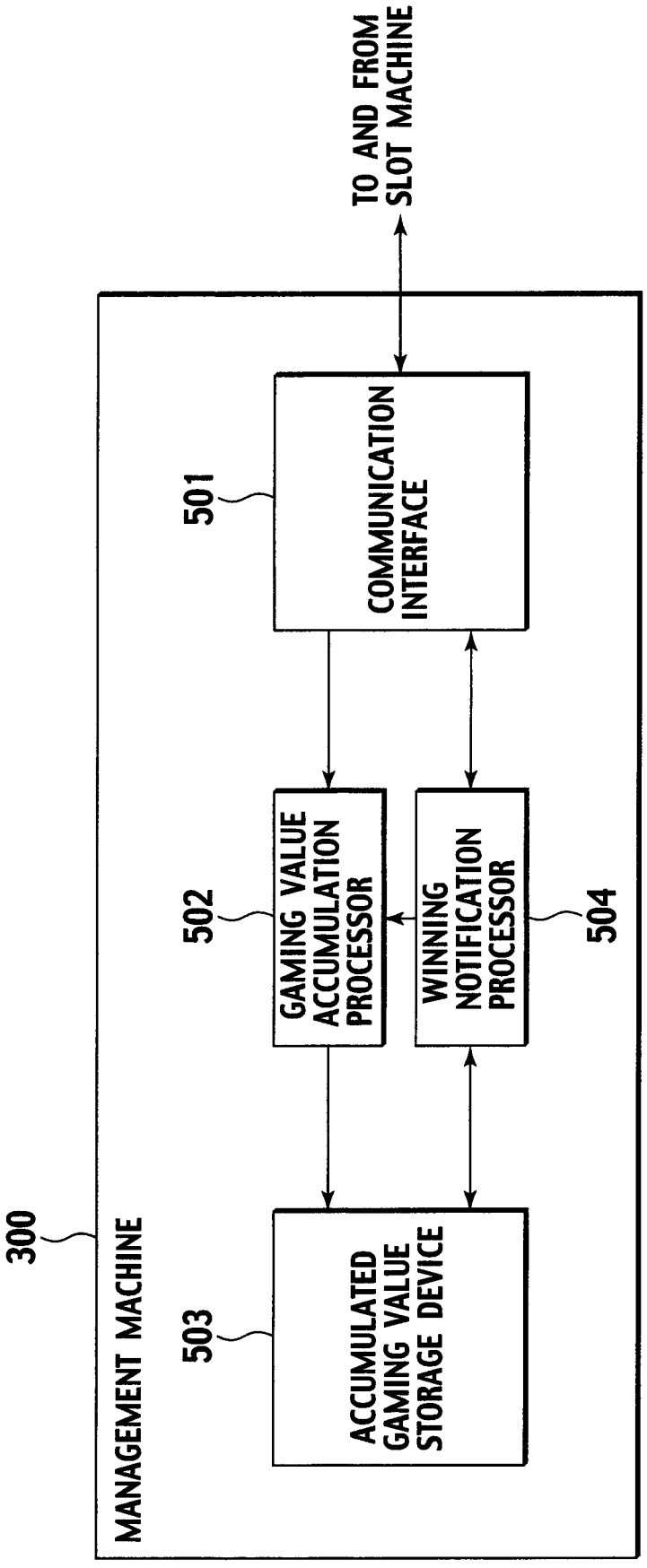
TO AND FROM SLOT MACHINE
MANAGEMENT MACHINE
300
COMMUNICATION INTERFACE
501
GAMING VALUE ACCUMULATION PROCESSOR
502
WINNING NOTIFICATION PROCESSOR
504
ACCUMULATED GAMING VALUE STORAGE DEVICE
503

FIG.6A

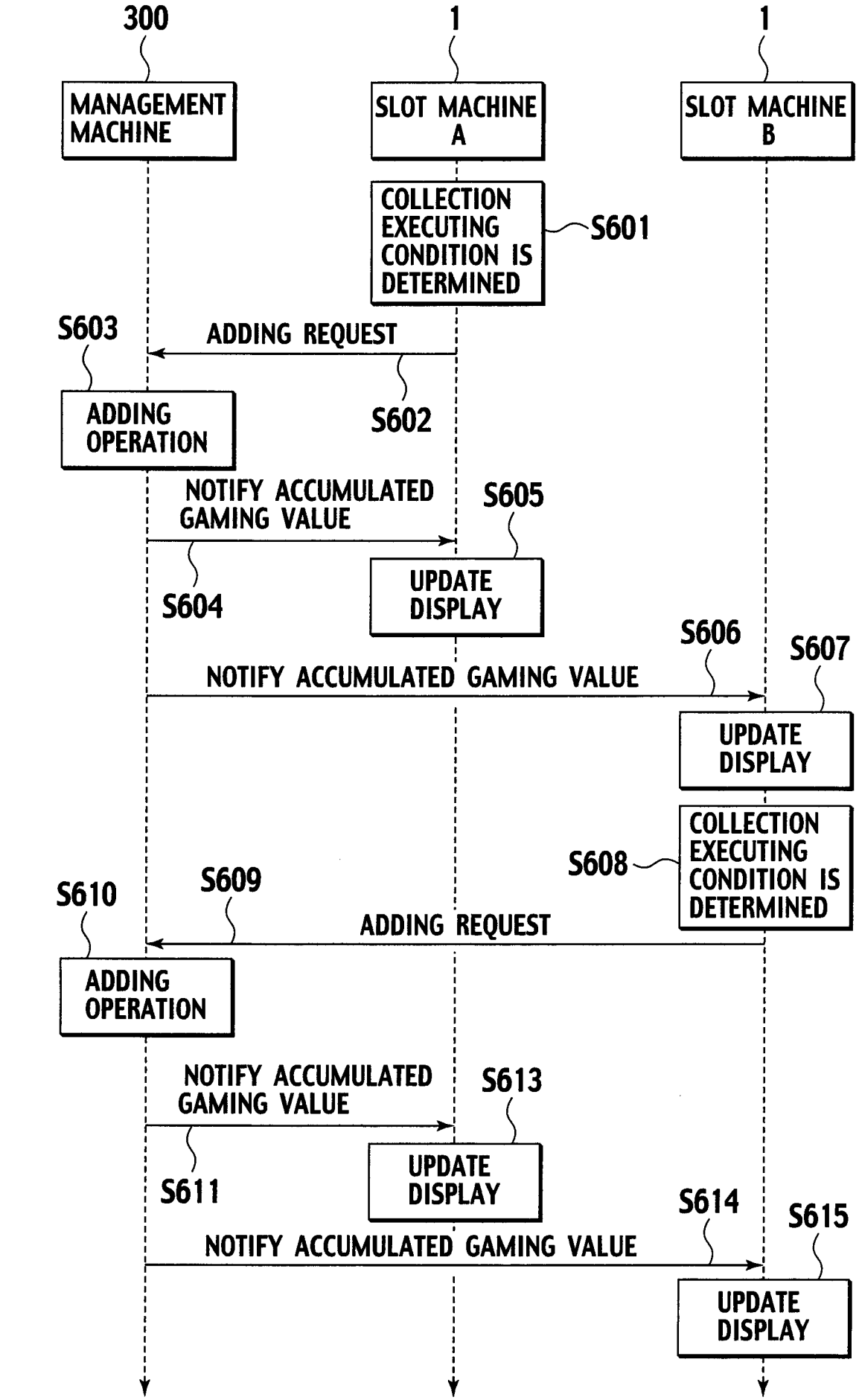
300
1
1
MANAGEMENT MACHINE
SLOT MACHINE A
SLOT MACHINE B
COLLECTION EXECUTING CONDITION IS DETERMINED
S601
S603
ADDING REQUEST
S602
ADDING OPERATION
NOTIFY ACCUMULATED GAMING VALUE
S605
S604
UPDATE DISPLAY
S606
S607
NOTIFY ACCUMULATED GAMING VALUE
UPDATE DISPLAY
COLLECTION EXECUTING CONDITION IS DETERMINED
S608
S610
S609
ADDING REQUEST
ADDING OPERATION
NOTIFY ACCUMULATED GAMING VALUE
S613
S611
UPDATE DISPLAY
S614
S615
NOTIFY ACCUMULATED GAMING VALUE
UPDATE DISPLAY

FIG.6B

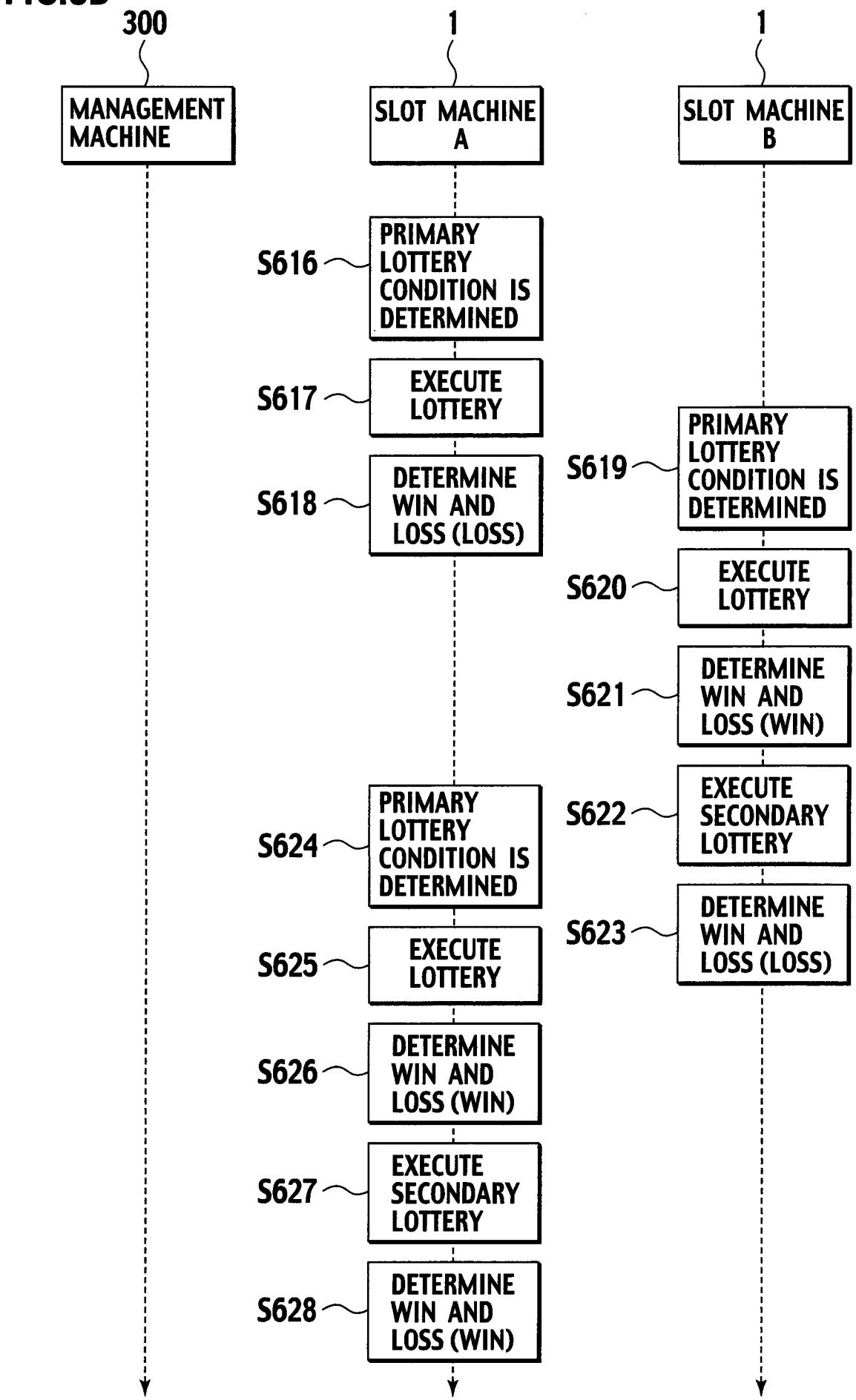
300
MANAGEMENT MACHINE
1
SLOT MACHINE A
1
SLOT MACHINE B
S616
PRIMARY LOTTERY CONDITION IS DETERMINED
S617
EXECUTE LOTTERY
S618
DETERMINE WIN AND LOSS (LOSS)
S619
PRIMARY LOTTERY CONDITION IS DETERMINED
S620
EXECUTE LOTTERY
S621
DETERMINE WIN AND LOSS (WIN)
S622
EXECUTE SECONDARY LOTTERY
S623
DETERMINE WIN AND LOSS (LOSS)
S624
PRIMARY LOTTERY CONDITION IS DETERMINED
S625
EXECUTE LOTTERY
S626
DETERMINE WIN AND LOSS (WIN)
S627
EXECUTE SECONDARY LOTTERY
S628
DETERMINE WIN AND LOSS (WIN)

FIG.6C

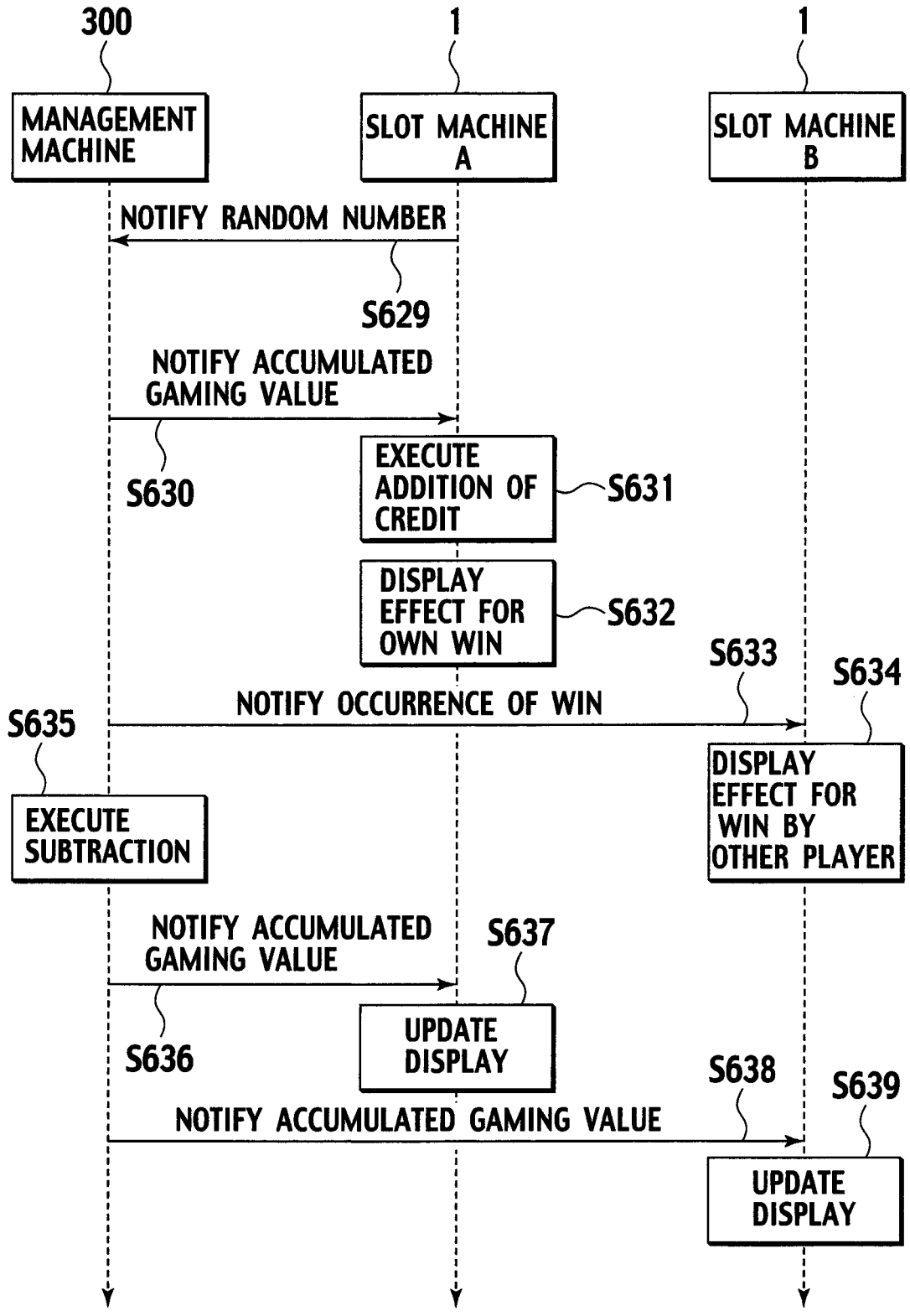
300
1
1
MANAGEMENT MACHINE
SLOT MACHINE A
SLOT MACHINE B
NOTIFY RANDOM NUMBER
S629
NOTIFY ACCUMULATED GAMING VALUE
S630
EXECUTE ADDITION OF CREDIT
S631
DISPLAY EFFECT FOR OWN WIN
S632
S633
S634
NOTIFY OCCURRENCE OF WIN
S635
EXECUTE SUBTRACTION
DISPLAY EFFECT FOR WIN BY OTHER PLAYER
NOTIFY ACCUMULATED GAMING VALUE
S637
S636
UPDATE DISPLAY
S638
S639
NOTIFY ACCUMULATED GAMING VALUE
UPDATE DISPLAY