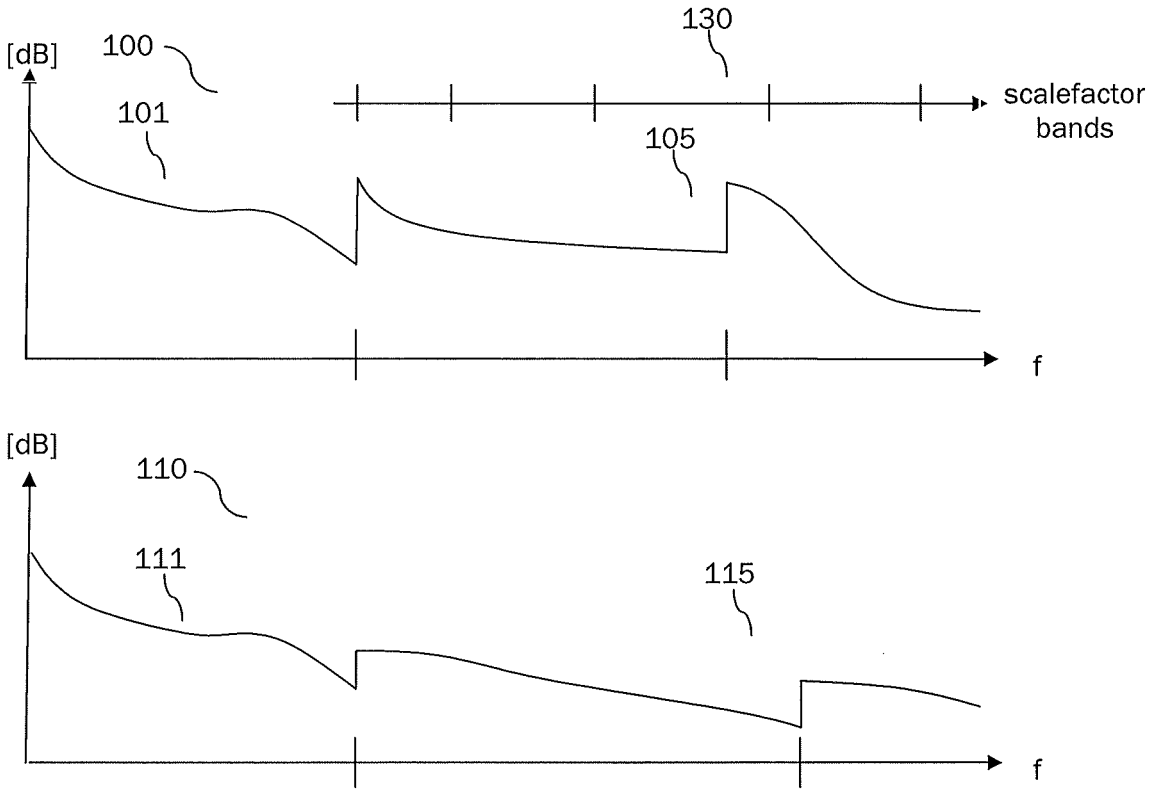
[dB]
100
130
scalefactor bands
101
105
f
[dB]
110
111
115
f

Fig. 1a

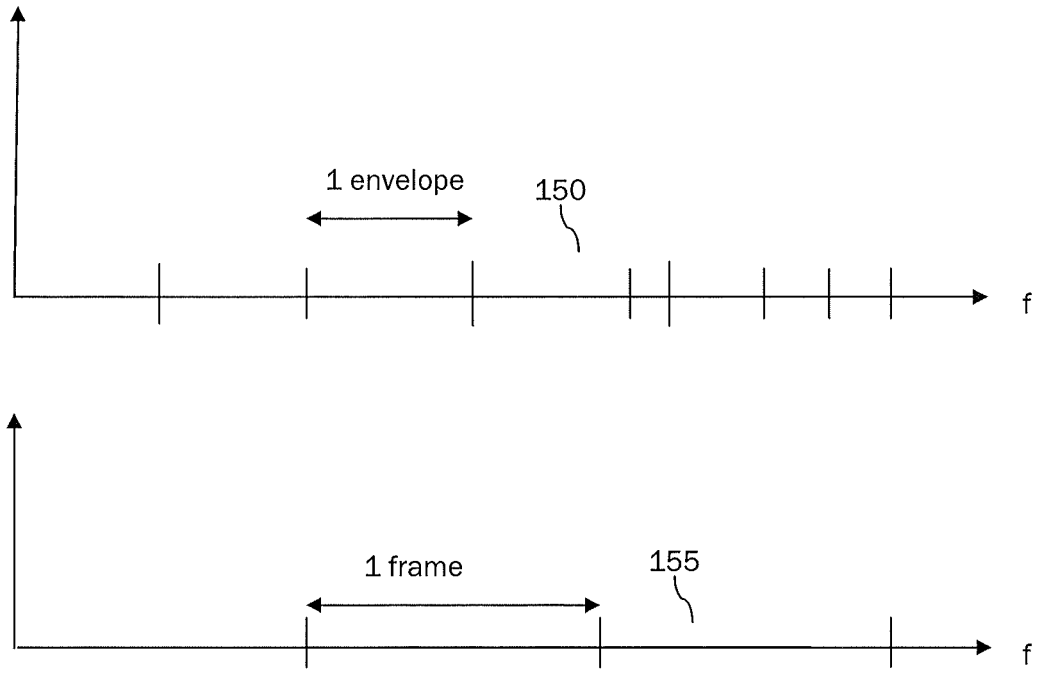
1 envelope
150
f
1 frame
155
f

Fig. 1b

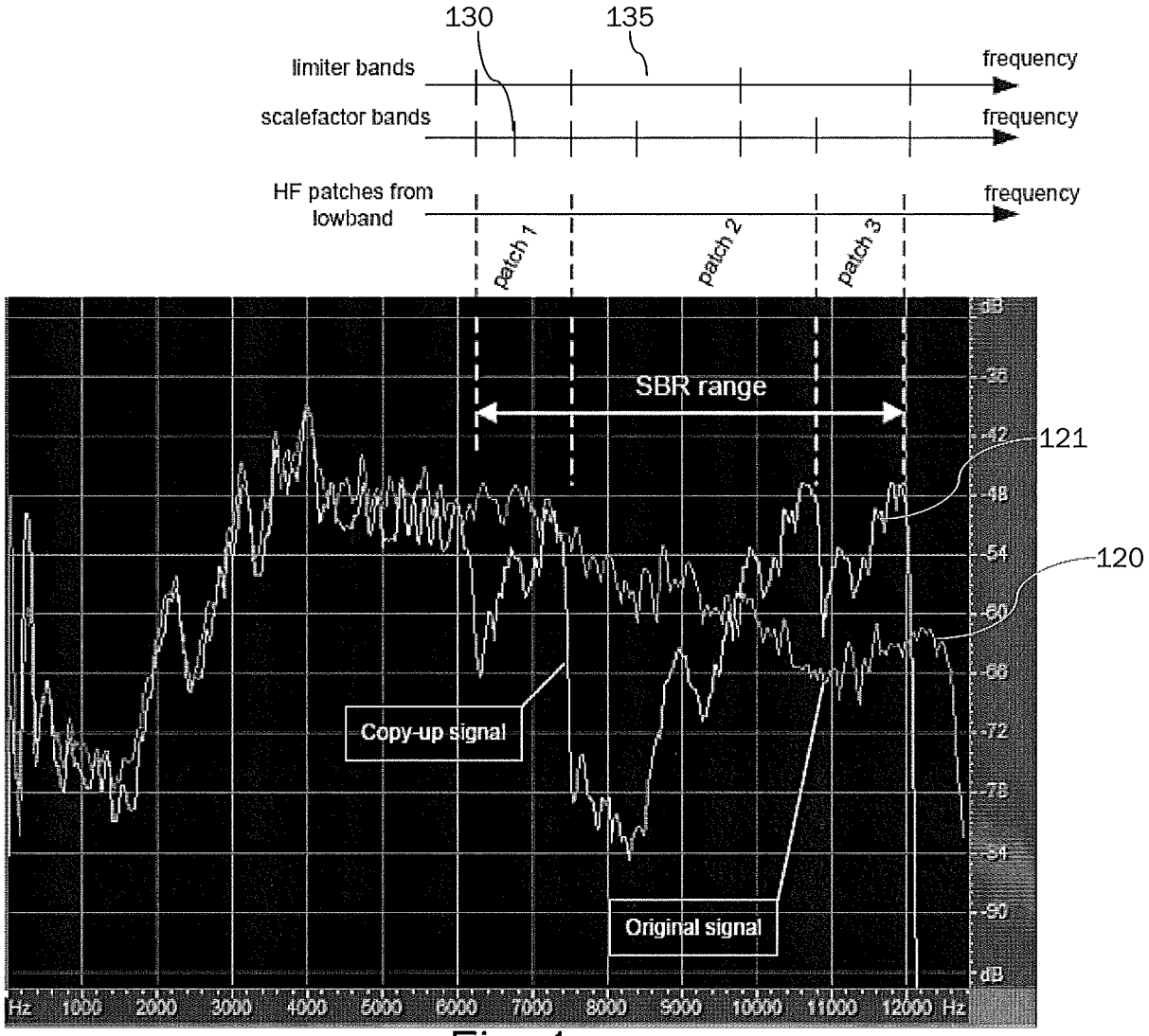
130
135
limiter bands
frequency
scalefactor bands
frequency
HF patches from lowband
frequency
patch 1
patch 2
patch 3
SBR range
121
120
Copy-up signal
Original signal
dB
-36
-42
-48
-54
-60
-66
-72
-78
-84
-90
Hz
1000
2000
3000
4000
5000
6000
7000
8000
9000
10000
11000
12000
Hz

Fig. 1c

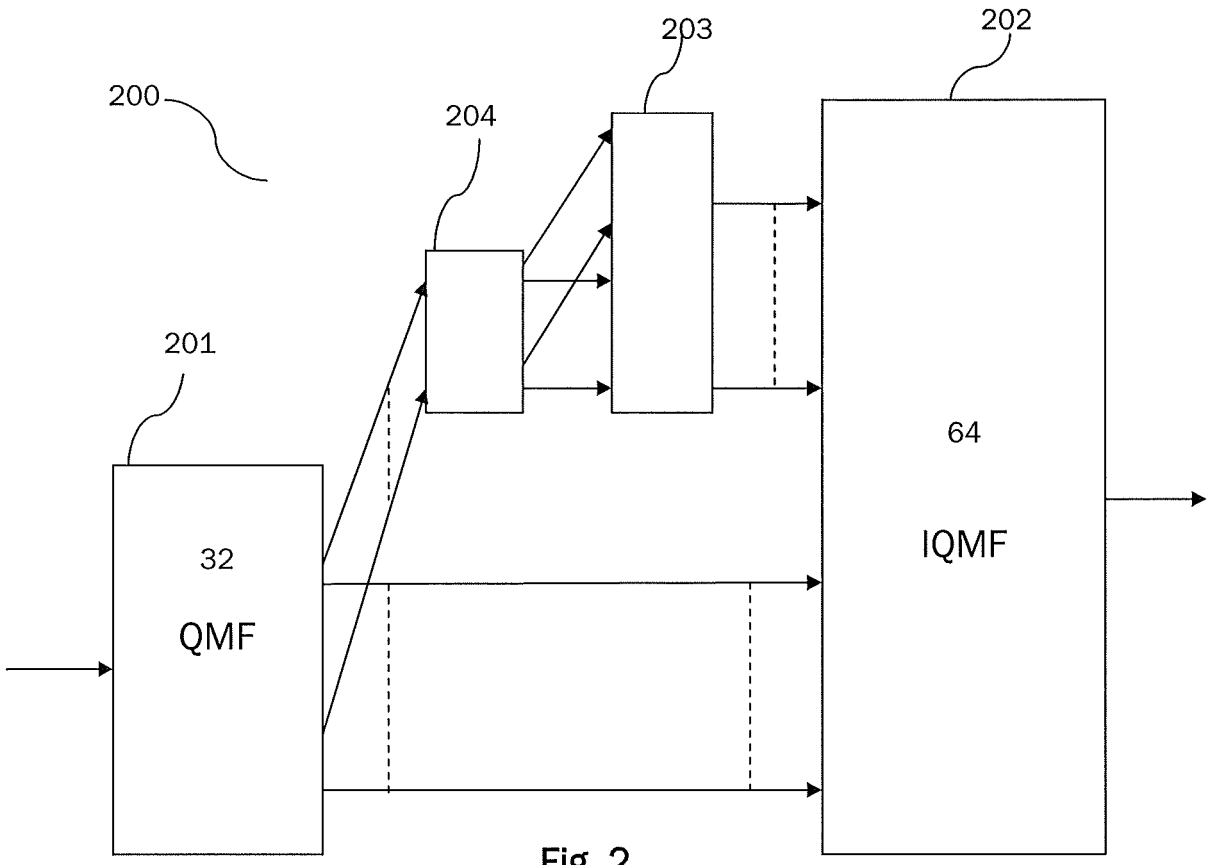
200
201
32
QMF
204
203
202
64
IQMF

Fig. 2

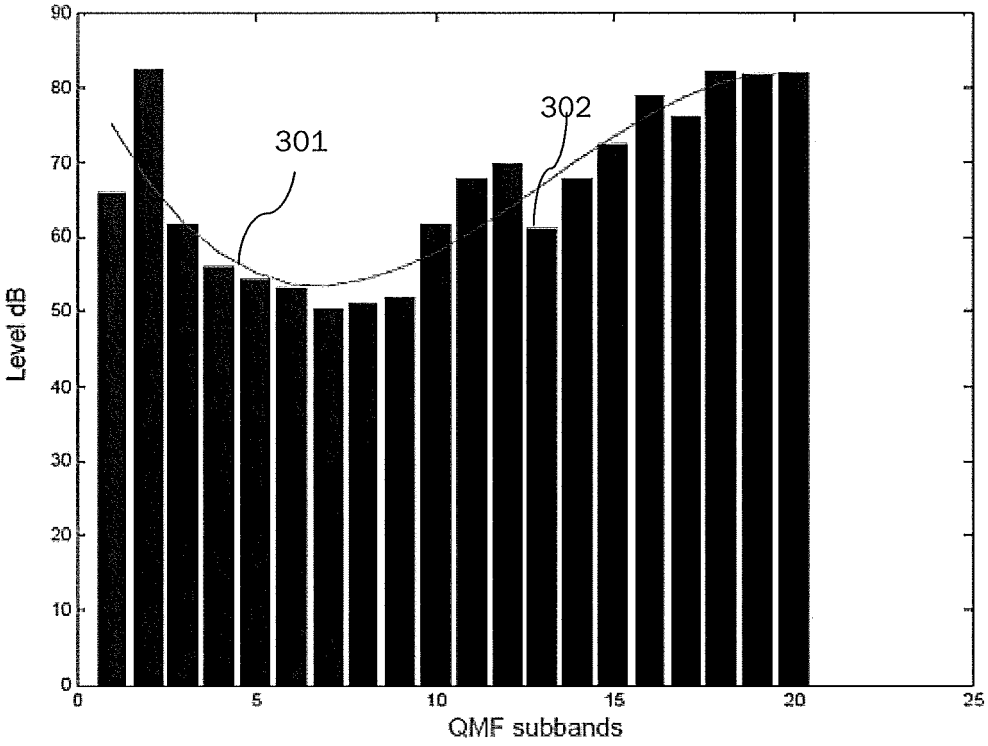
301
302
Level dB
QMF subbands
0
10
20
30
40
50
60
70
80
90
0
5
10
15
20
25

Fig. 3

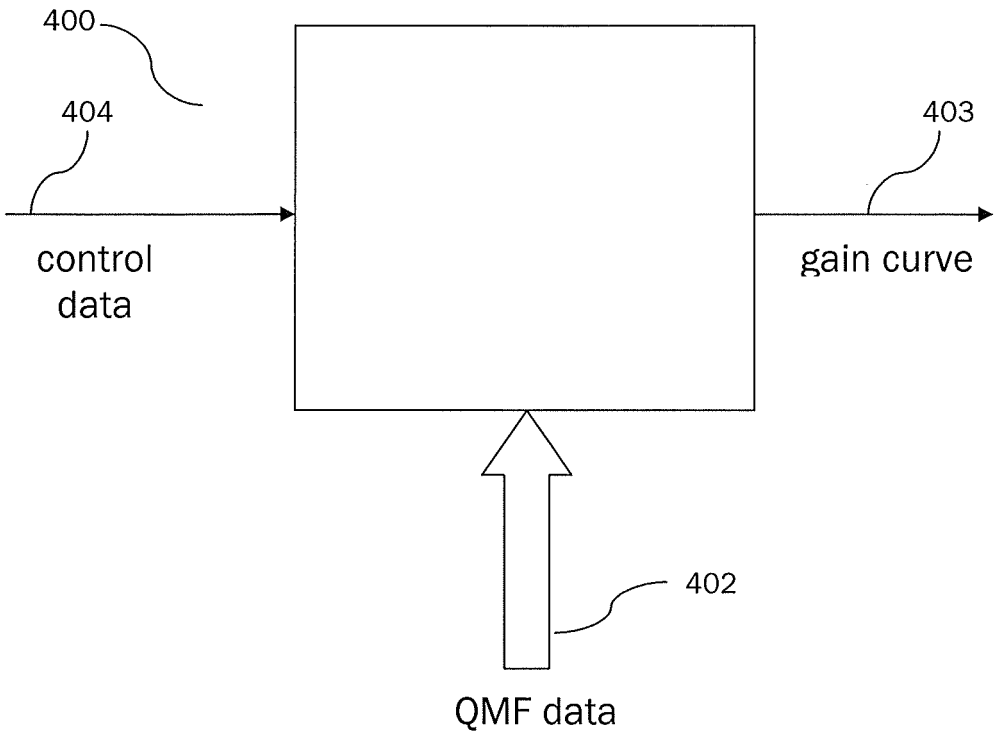
400
404
403
control data
gain curve
402
QMF data

Fig. 4

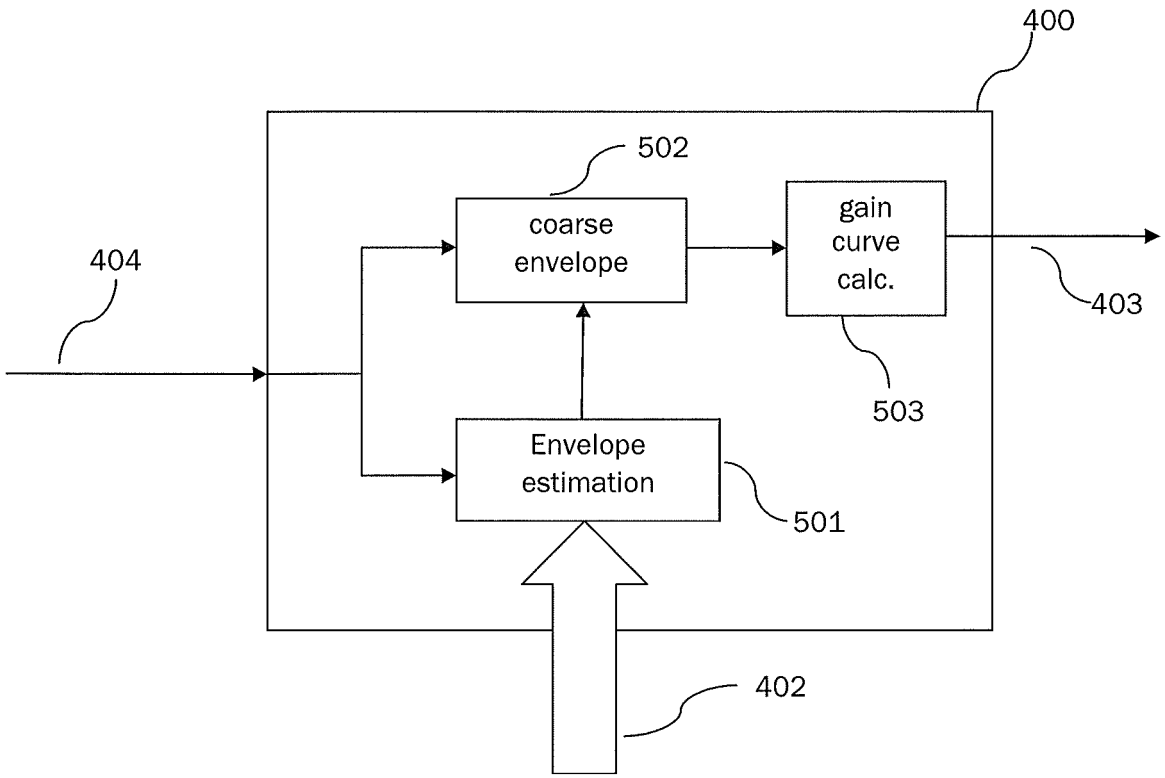
400
502
coarse envelope
gain curve calc.
404
403
503
Envelope estimation
501
402

Fig. 5

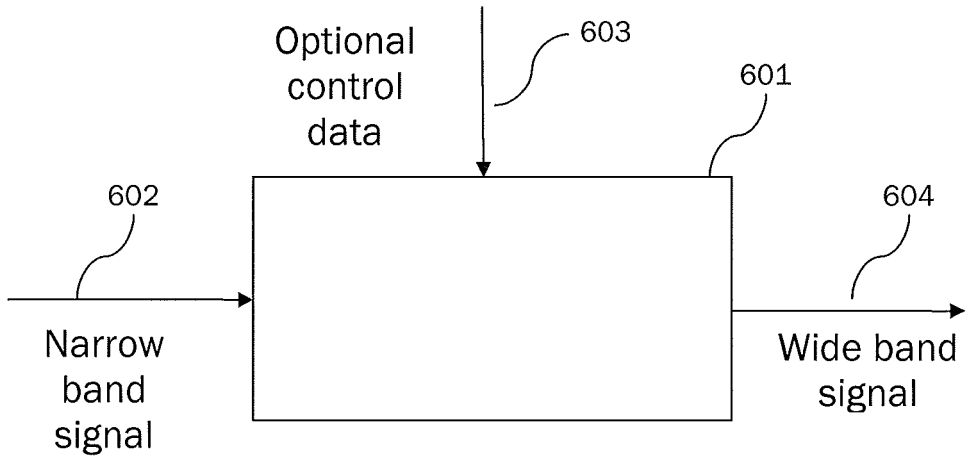
Optional
control
data
603
601
602
604
Narrow
band
signal
Wide band
signal

Fig. 6

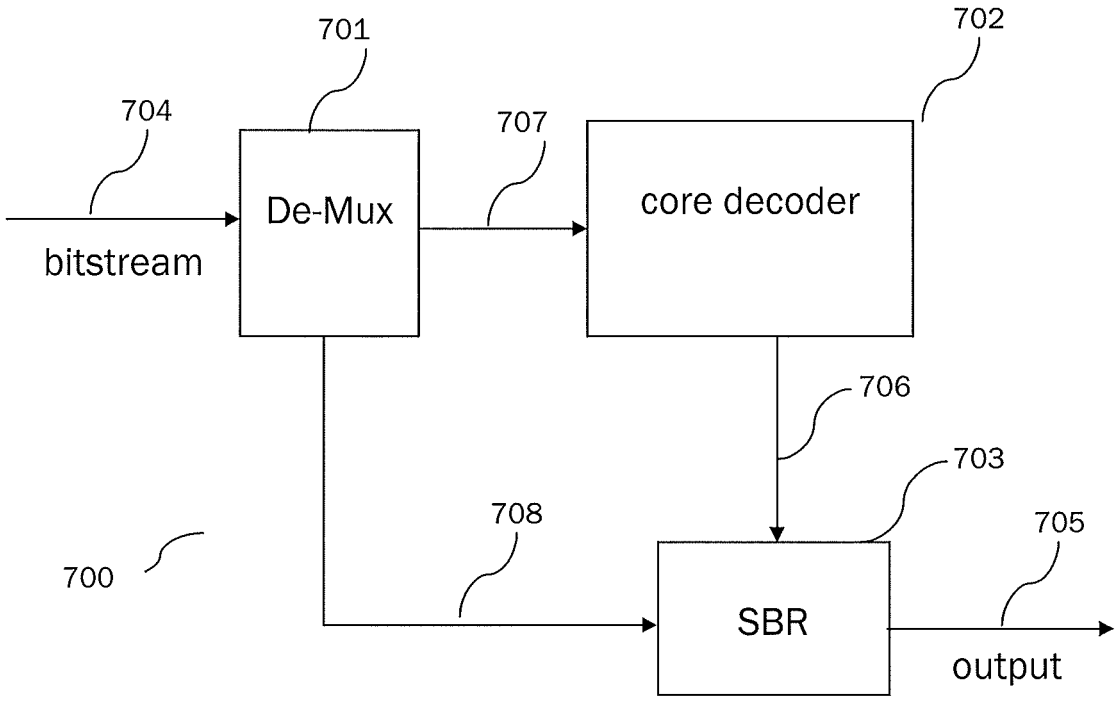
701
702
704
707
De-Mux
core decoder
bitstream
706
703
708
705
700
SBR
output

Fig. 7

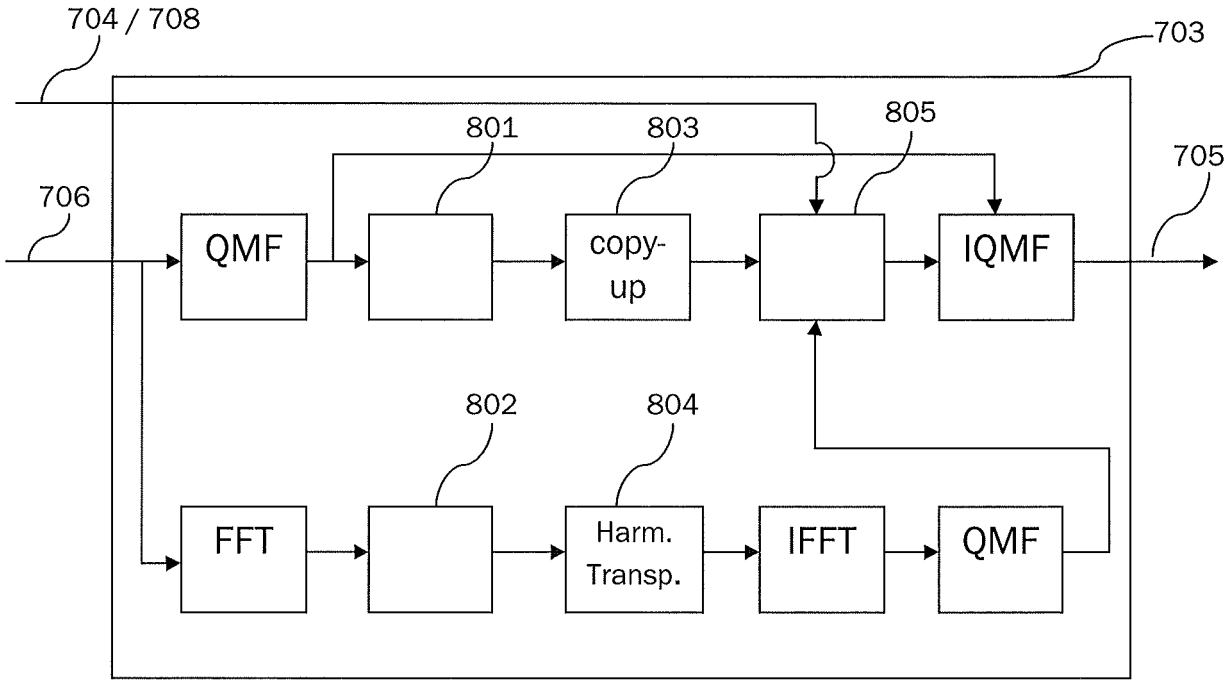
704 / 708
703
801
803
805
705
706
QMF
copy-
up
IQMF
802
804
FFT
Harm.
Transp.
IFFT
QMF

Fig. 8

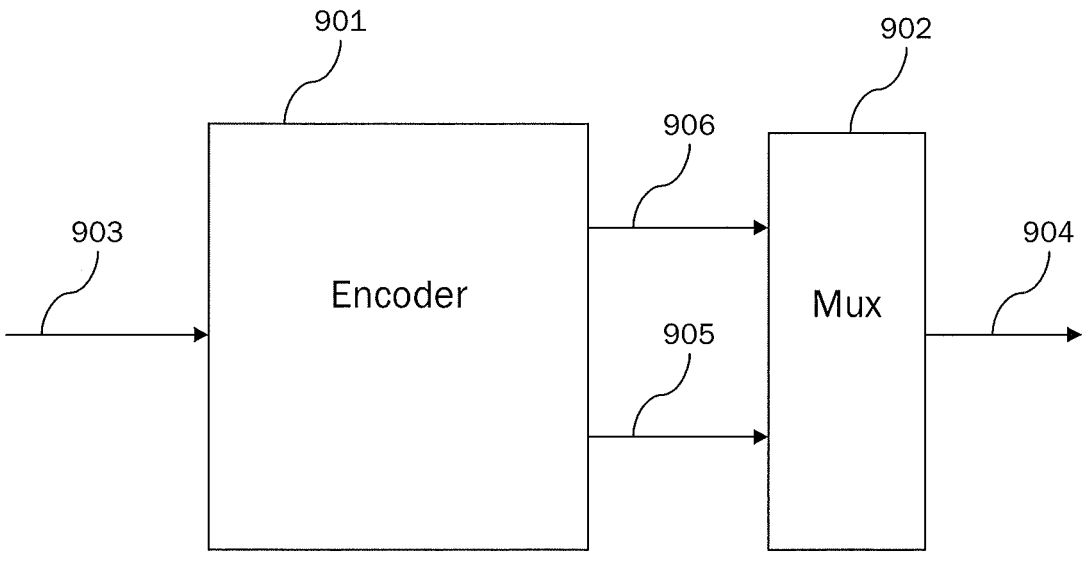
901
902
906
903
Encoder
Mux
904
905

Fig. 9

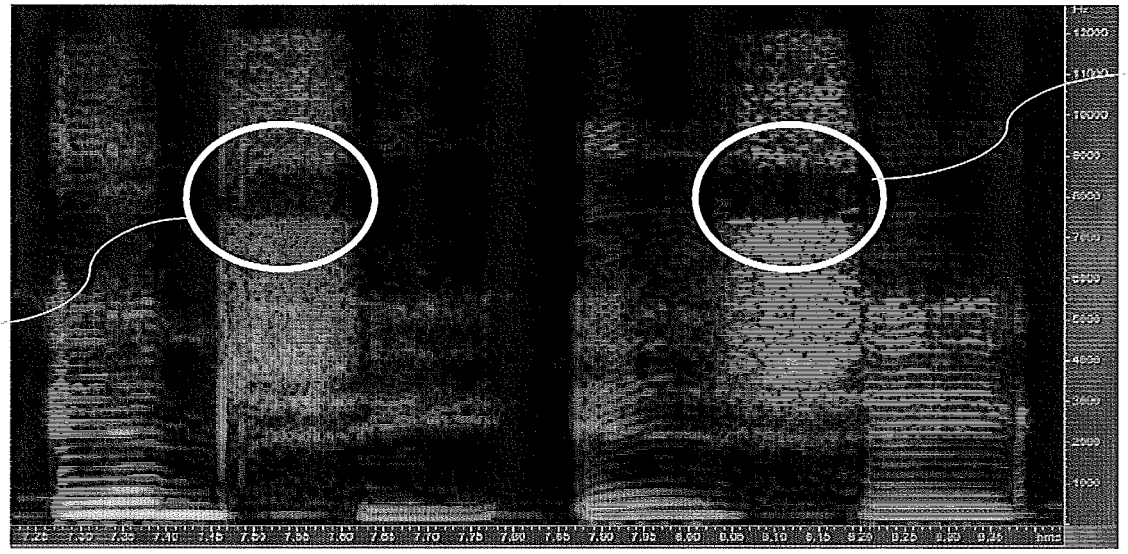

Fig. 10a

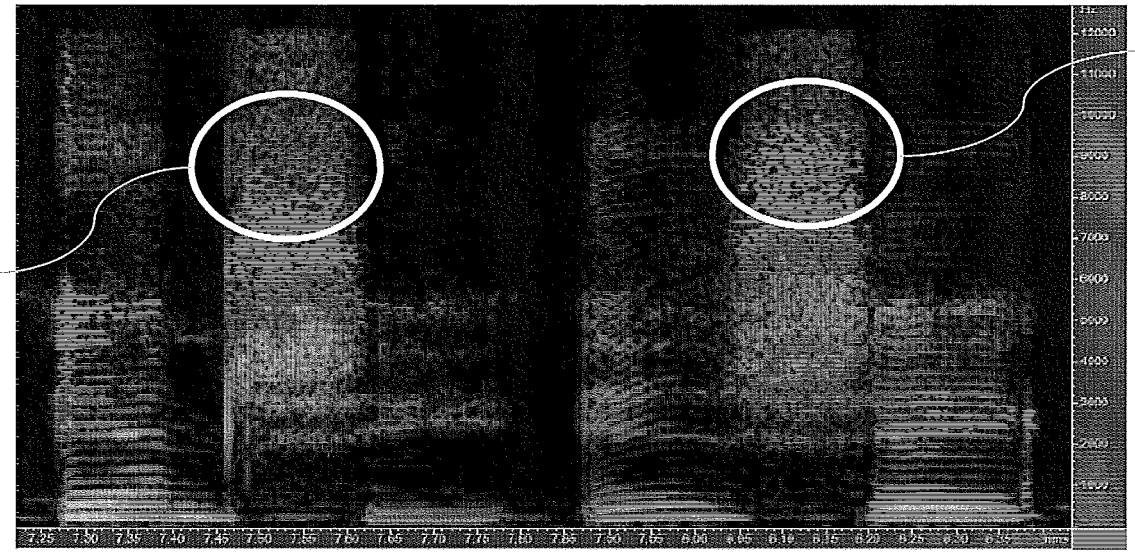

Fig. 10b

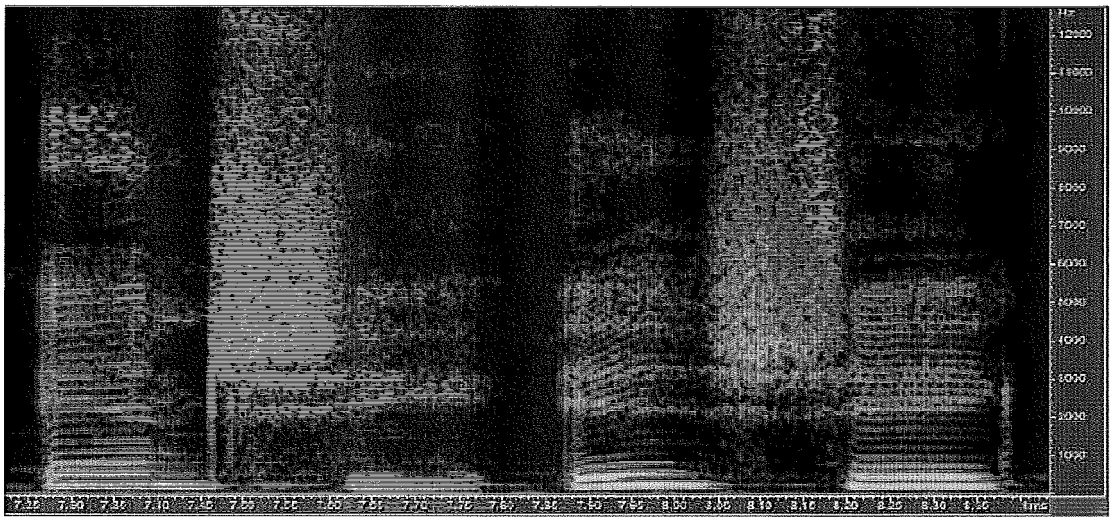

Fig. 10c