(12) INTERNATIONAL APPLICATION PUBLISHED UNDER THE PATENT COOPERATION TREATY (PCT)

(19) World Intellectual Property Organization
International Bureau

(43) International Publication Date
1 October 2009 (01.10.2009)

PCT

(10) International Publication Number
WO 2009/120603 A3

(51) International Patent Classification:
H01S 3/10 (2006.01) *H01S 5/06* (2006.01)

(21) International Application Number:
PCT/US2009/037824

(22) International Filing Date:
20 March 2009 (20.03.2009)

(25) Filing Language: English

(26) Publication Language: English

(30) Priority Data:
12/054,811 25 March 2008 (25.03.2008) US

(71) Applicant *(for all designated States except US)*: **ELECTRO SCIENTIFIC INDUSTRIES, INC.** [US/US]; 13900 NW Science Park Drive, Portland, OR 97229-5497 (US).

(72) Inventors; and

(75) Inventors/Applicants *(for US only)*: **SUN, Yunlong** [US/US]; 7679 SW 194th Terrace, Beaverton, OR 97007 (US). **CHANG, Feng** [CN/CN]; P.O. Box 2711, 100080 Beijing (CN).

(74) Agent: **BARKER, Aaron, D.**; Stoel Rives LLP, 201 So. Main Street, Suite 1100, One Utah Center, Salt Lake City, UT 84111 (US).

(81) Designated States *(unless otherwise indicated, for every kind of national protection available)*: AE, AG, AL, AM, AO, AT, AU, AZ, BA, BB, BG, BH, BR, BW, BY, BZ, CA, CH, CN, CO, CR, CU, CZ, DE, DK, DM, DO, DZ, EC, EE, EG, ES, FI, GB, GD, GE, GH, GM, GT, HN, HR, HU, ID, IL, IN, IS, JP, KE, KG, KM, KN, KP, KR, KZ, LA, LC, LK, LR, LS, LT, LU, LY, MA, MD, ME, MG, MK, MN, MW, MX, MY, MZ, NA, NG, NI, NO, NZ, OM, PG, PH, PL, PT, RO, RS, RU, SC, SD, SE, SG, SK, SL, SM, ST, SV, SY, TJ, TM, TN, TR, TT, TZ, UA, UG, US, UZ, VC, VN, ZA, ZM, ZW.

(84) Designated States *(unless otherwise indicated, for every kind of regional protection available)*: ARIPO (BW, GH, GM, KE, LS, MW, MZ, NA, SD, SL, SZ, TZ, UG, ZM, ZW), Eurasian (AM, AZ, BY, KG, KZ, MD, RU, TJ, TM), European (AT, BE, BG, CH, CY, CZ, DE, DK, EE, ES, FI, FR, GB, GR, HR, HU, IE, IS, IT, LT, LU, LV, MC, MK, MT, NL, NO, PL, PT, RO, SE, SI, SK, TR), OAPI (BF, BJ, CF, CG, CI, CM, GA, GN, GQ, GW, ML, MR, NE, SN, TD, TG).

Published:

— *with international search report (Art. 21(3))*

— *before the expiration of the time limit for amending the claims and to be republished in the event of receipt of amendments (Rule 48.2(h))*

[Continued on next page]

(54) Title: SYSTEMS AND METHODS FOR LASER PULSE EQUALIZATION

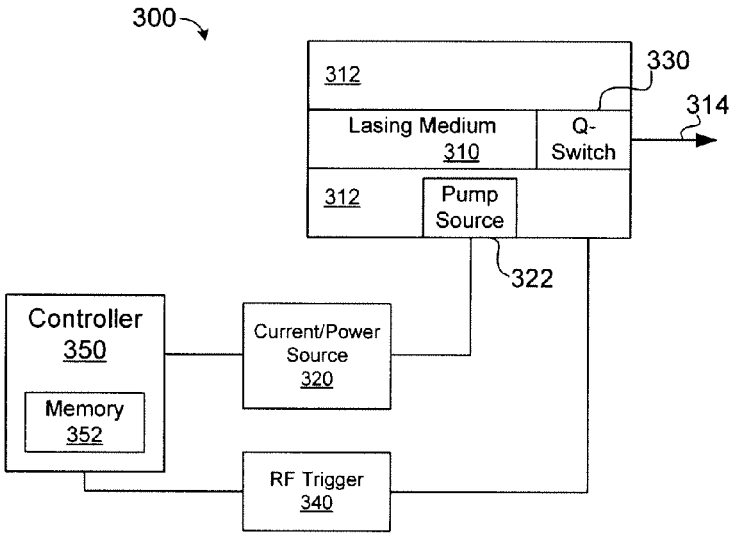

FIG. 3

(57) Abstract: Systems and methods provide laser pulse equalization at different pulse repetition frequencies (PRFs). After initially pumping a lasing medium from a first pumping level to a peak pumping level, a controller may cause a pump source to continue pumping the lasing medium according to a pulse equalization pumping curve. The equalization pumping curve may be determined based on testing laser pulse parameters at different PRFs to achieve an optimal equalization result of the pulse parameters. The optimization metric used to evaluate various equalization pumping curves may include a consistency of the pulse energy level, peak power level, and/or pulse width of the laser under different PRFs. The equalization pumping curve may be a descending curve from the peak pumping level to the first pumping level. The equalization pumping curve may be a linearly declining curve, a substantially exponentially declining curve, a parametrically declining curve, or any other curve type.

WO 2009/120603 A3

WO 2009/120603 A3

(88) Date of publication of the international search report:
23 December 2009