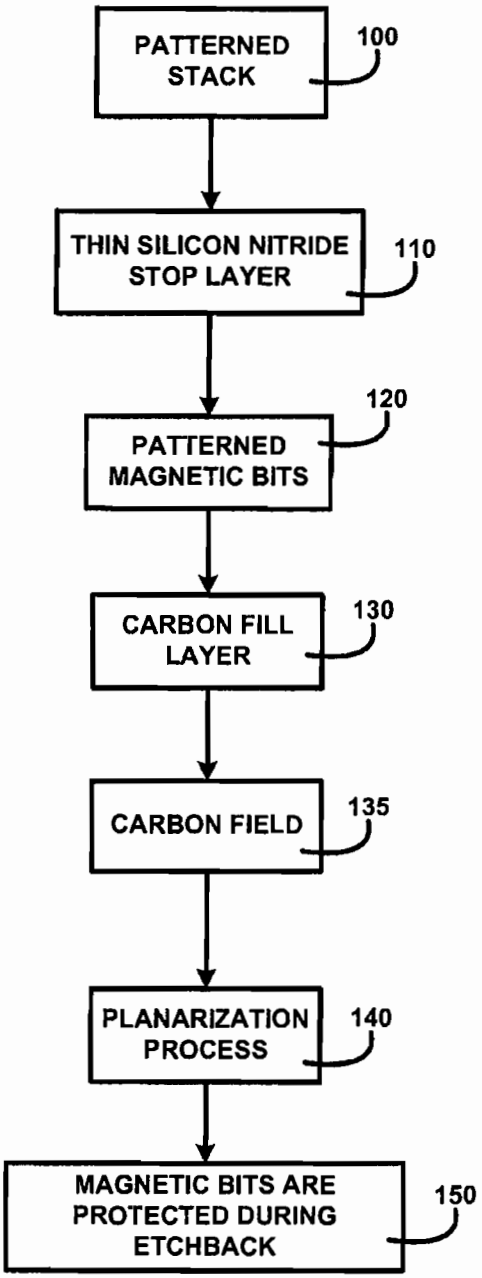
PATTERNED STACK
100
THIN SILICON NITRIDE STOP LAYER
110
120
PATTERNED MAGNETIC BITS
CARBON FILL LAYER
130
CARBON FIELD
135
PLANARIZATION PROCESS
140
MAGNETIC BITS ARE PROTECTED DURING ETCHBACK
150

FIG. 1

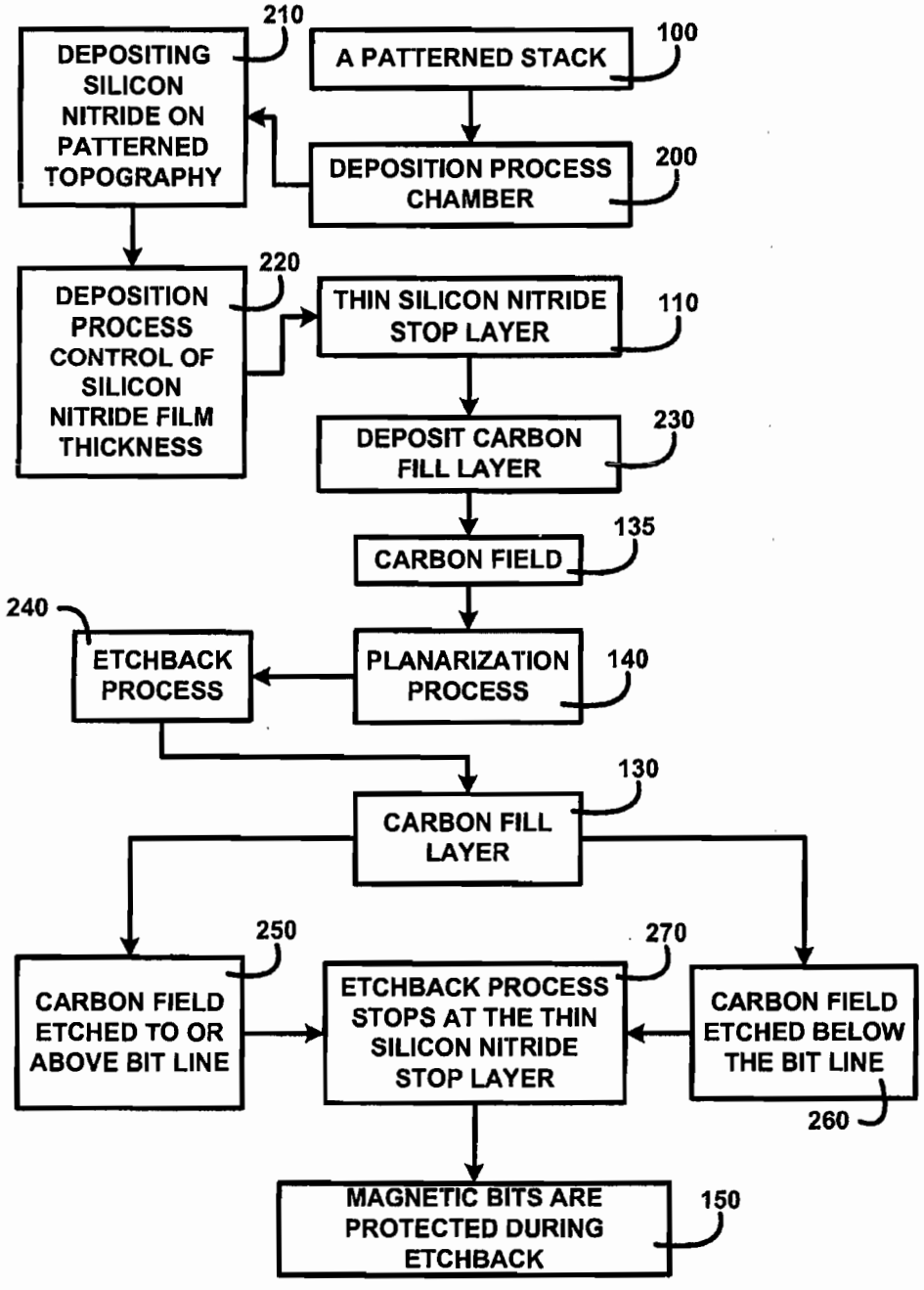
210
DEPOSITING SILICON NITRIDE ON PATTERNED TOPOGRAPHY
A PATTERNED STACK
100
DEPOSITION PROCESS CHAMBER
200
220
DEPOSITION PROCESS CONTROL OF SILICON NITRIDE FILM THICKNESS
THIN SILICON NITRIDE STOP LAYER
110
DEPOSIT CARBON FILL LAYER
230
CARBON FIELD
135
240
ETCHBACK PROCESS
PLANARIZATION PROCESS
140
130
CARBON FILL LAYER
250
CARBON FIELD ETCHED TO OR ABOVE BIT LINE
270
ETCHBACK PROCESS STOPS AT THE THIN SILICON NITRIDE STOP LAYER
CARBON FIELD ETCHED BELOW THE BIT LINE
260
MAGNETIC BITS ARE PROTECTED DURING ETCHBACK
150

FIG. 2

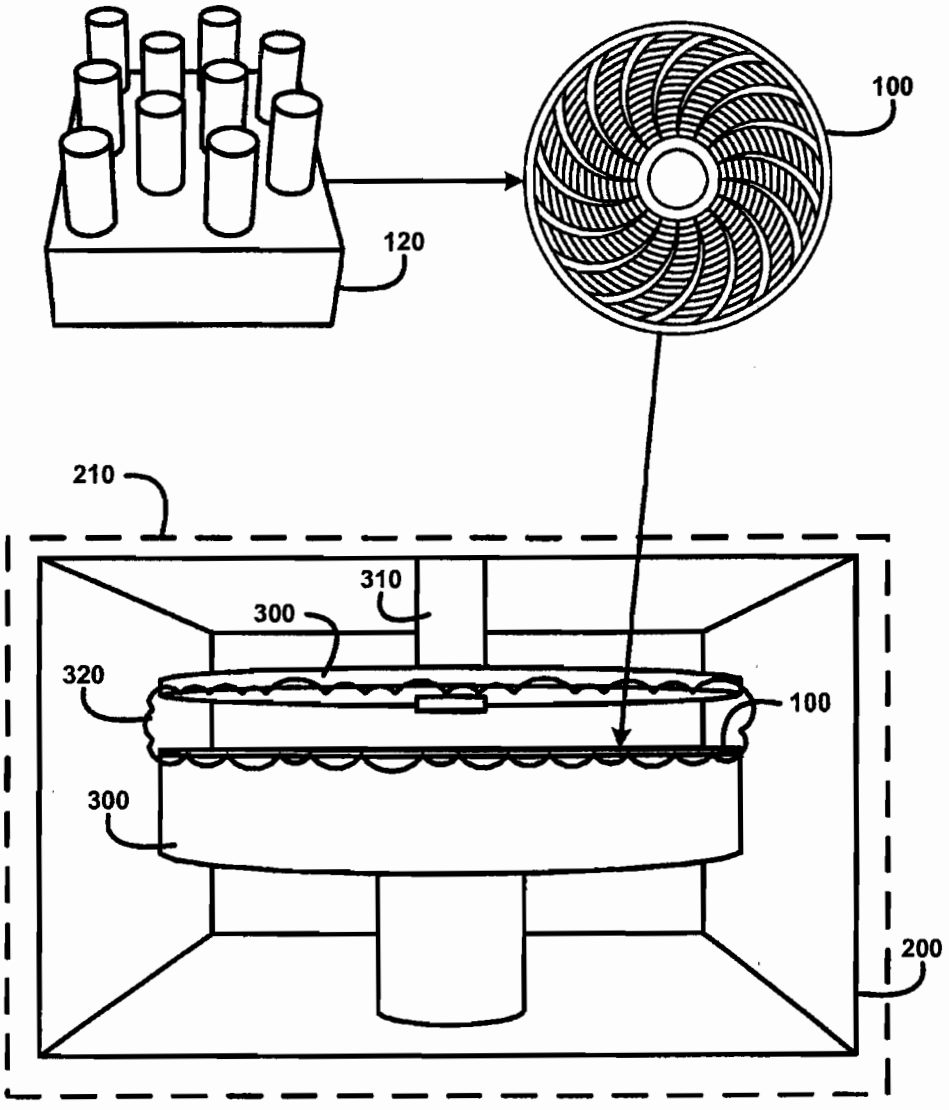

FIG. 3

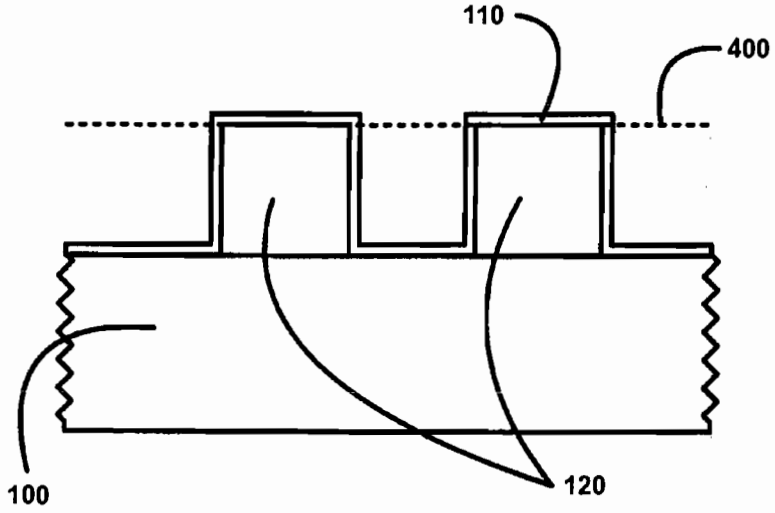

FIG. 4A

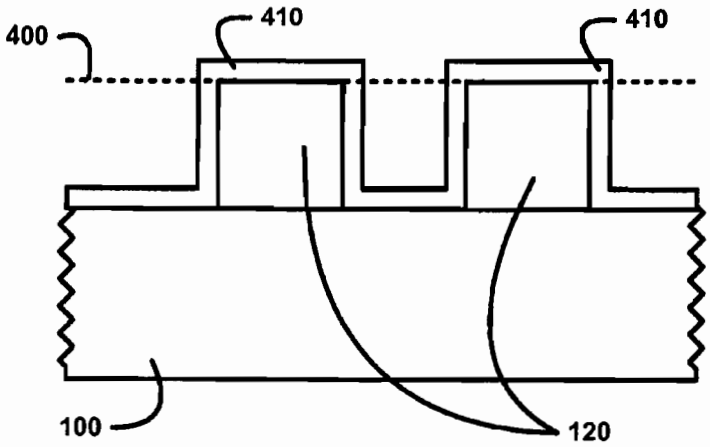

FIG. 4B

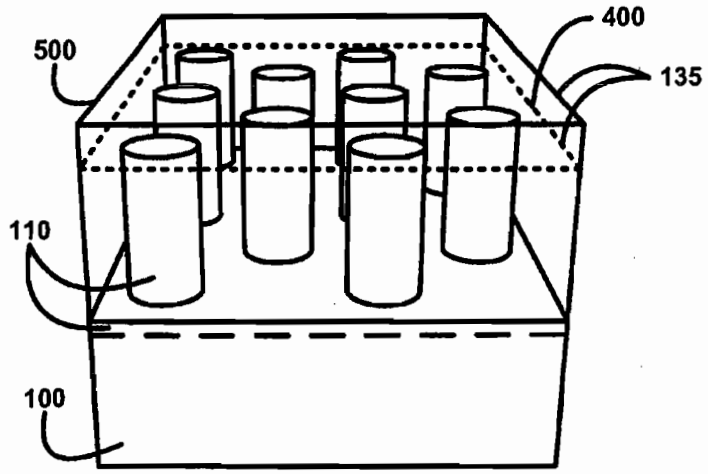

FIG. 5A

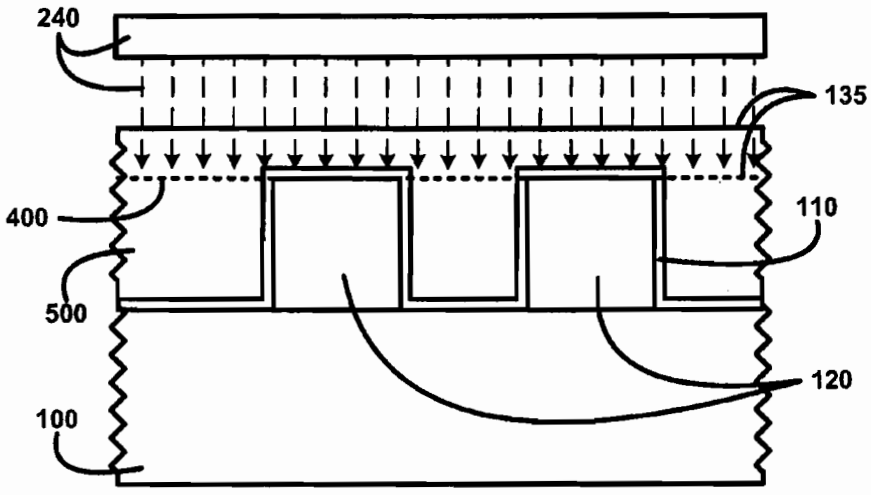

FIG. 5B

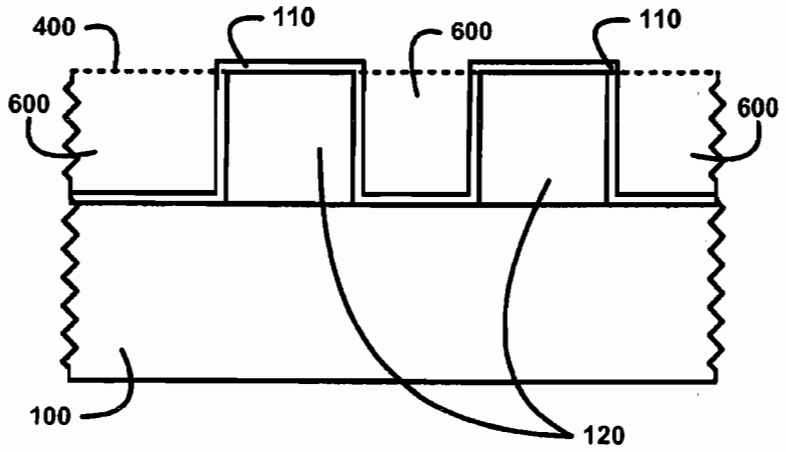

FIG. 6A

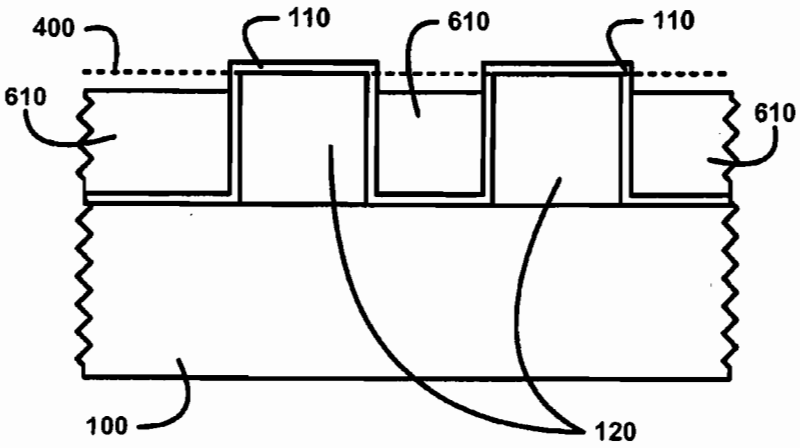

FIG. 6B

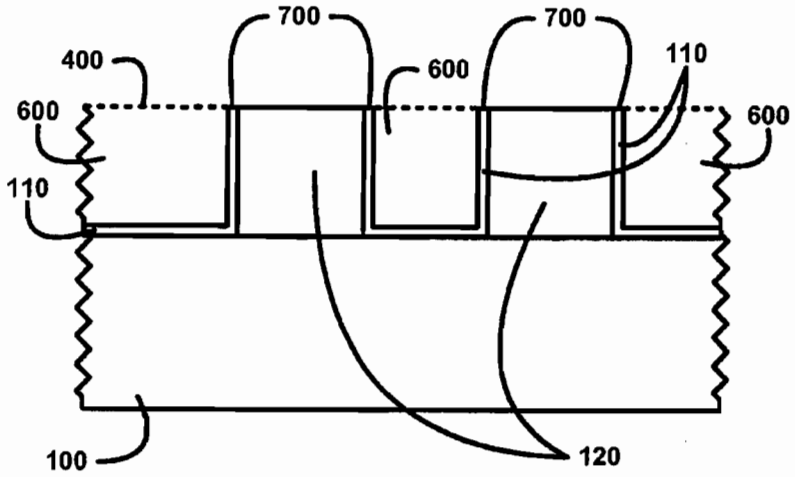

FIG. 7