FIG. 1

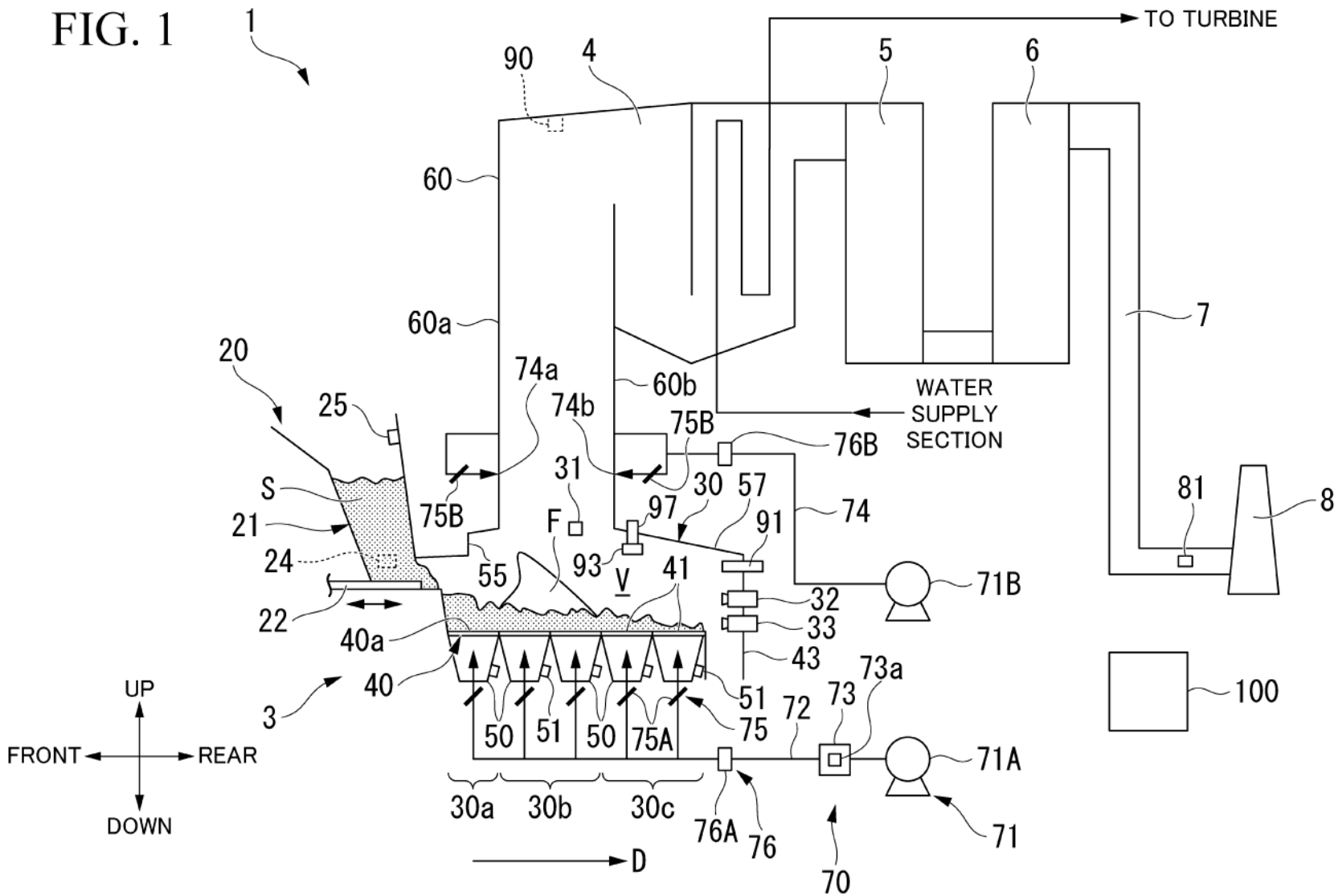
1
90
4
5
6
TO TURBINE
60
60a
60b
7
20
25
74a
74b
75B
76B
WATER
SUPPLY
SECTION
S
21
24
22
75B
31
30
57
97
91
74
81
8
F
93
V
41
55
32
33
71B
40a
40
43
3
51
73a
73
72
75
50
51
50
75A
71A
100
UP
FRONT
REAR
DOWN
30a
30b
30c
76A
76
71
70
D

FIG. 2

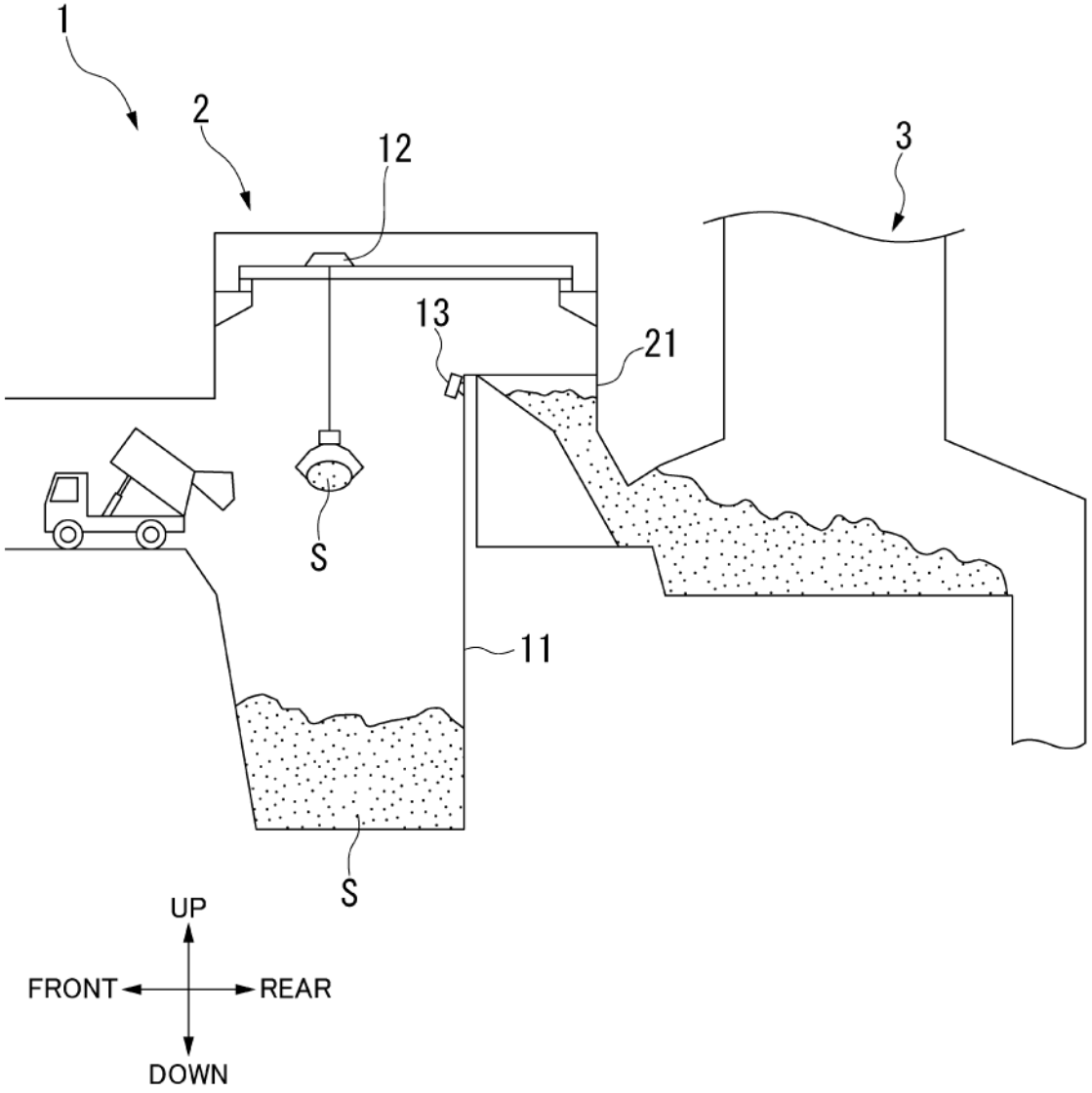

FIG. 3

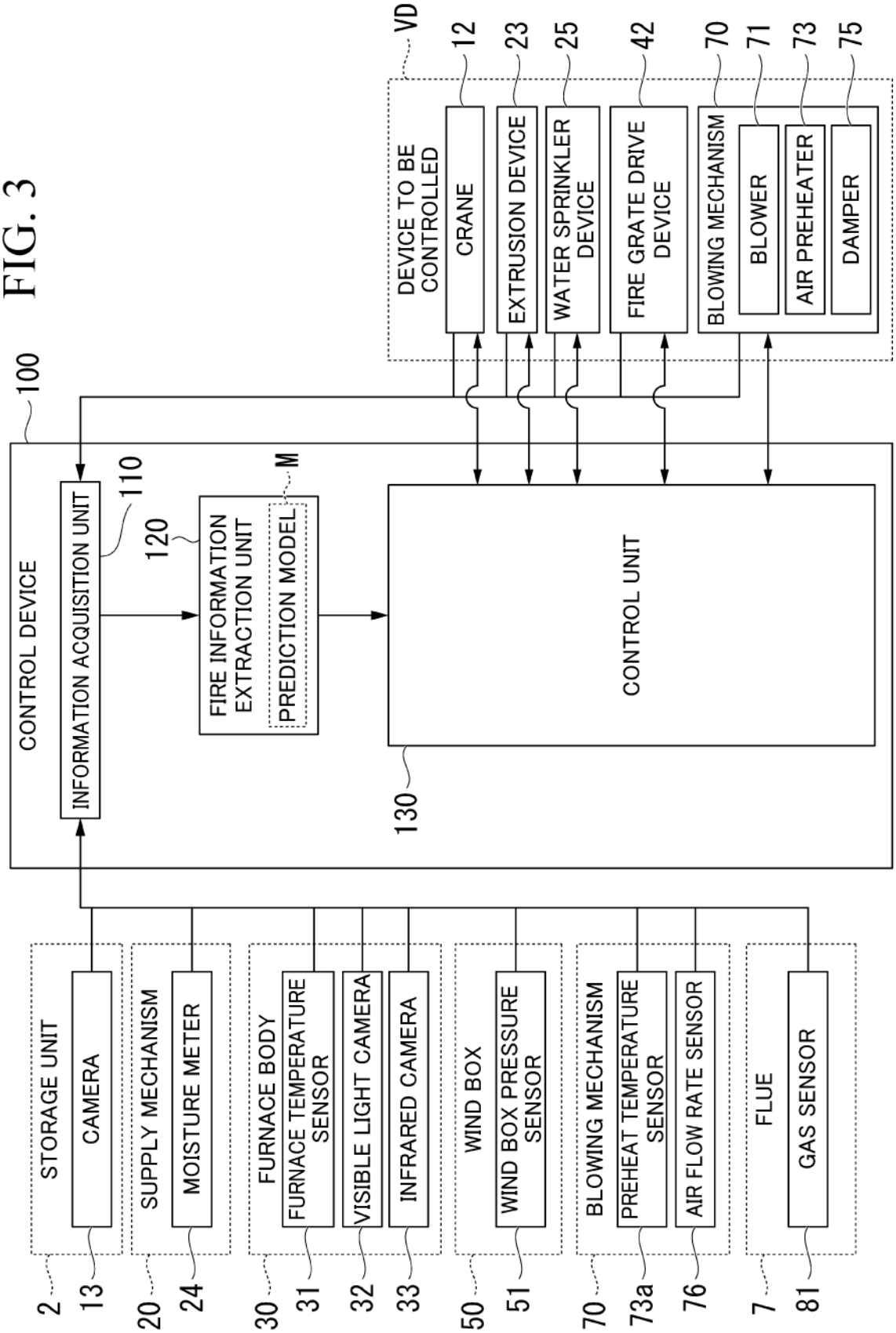
100
CONTROL DEVICE
INFORMATION ACQUISITION UNIT
110
120
FIRE INFORMATION EXTRACTION UNIT
M
PREDICTION MODEL
CONTROL UNIT
130
VD
DEVICE TO BE CONTROLLED
12
CRANE
23
EXTRUSION DEVICE
25
WATER SPRINKLER DEVICE
42
FIRE GRATE DRIVE DEVICE
70
BLOWING MECHANISM
71
BLOWER
73
AIR PREHEATER
75
DAMPER
2
STORAGE UNIT
13
CAMERA
20
SUPPLY MECHANISM
24
MOISTURE METER
30
FURNACE BODY
31
FURNACE TEMPERATURE SENSOR
32
VISIBLE LIGHT CAMERA
33
INFRARED CAMERA
50
WIND BOX
51
WIND BOX PRESSURE SENSOR
70
BLOWING MECHANISM
73a
PREHEAT TEMPERATURE SENSOR
76
AIR FLOW RATE SENSOR
7
FLUE
81
GAS SENSOR

FIG. 4

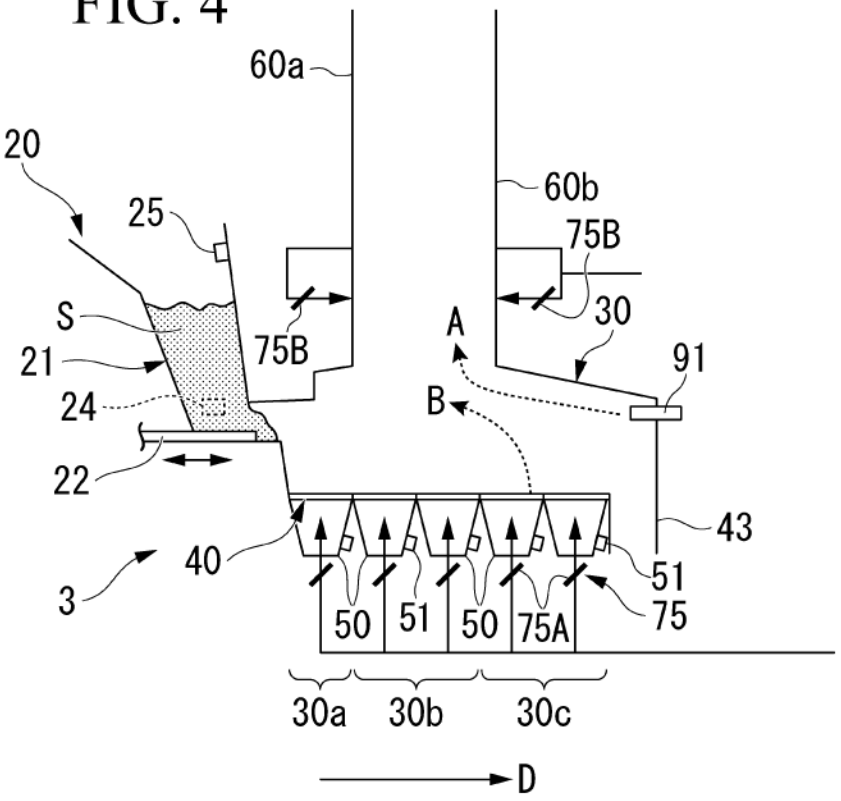
60a
20
25
60b
75B
S
75B
30
A
21
91
24
B
22
43
40
51
3
50
51
50
75A
75
30a
30b
30c
D

FIG. 5

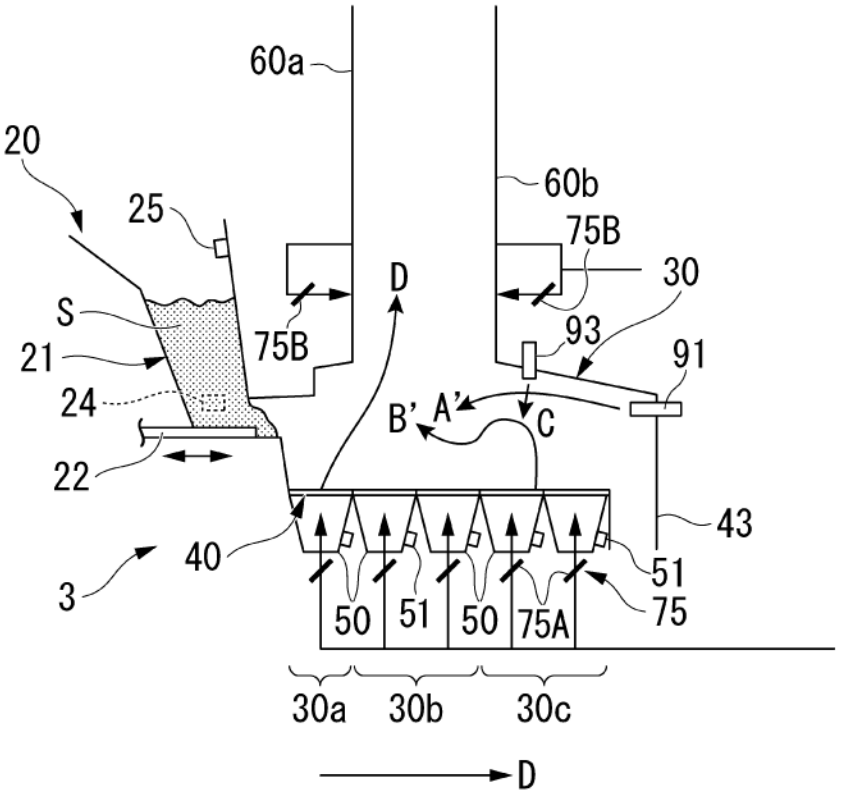
60a
20
25
60b
75B
D
30
S
75B
93
91
21
24
B'
A'
C
22
43
40
51
3
50
51
50
75A
75
30a
30b
30c
D

FIG. 6

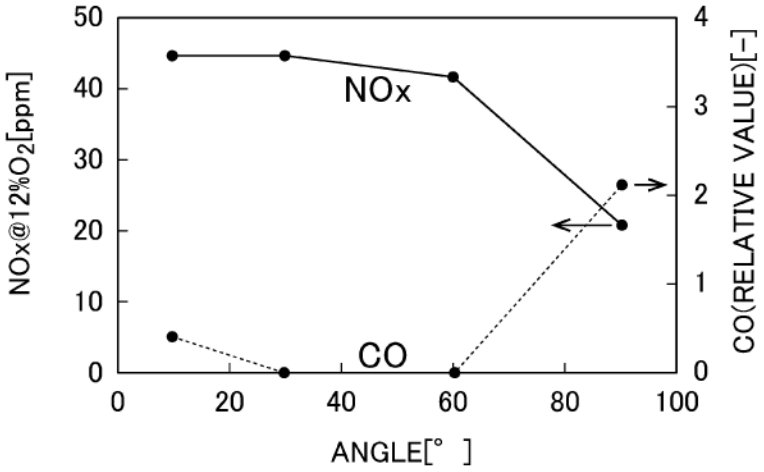

FIG. 7

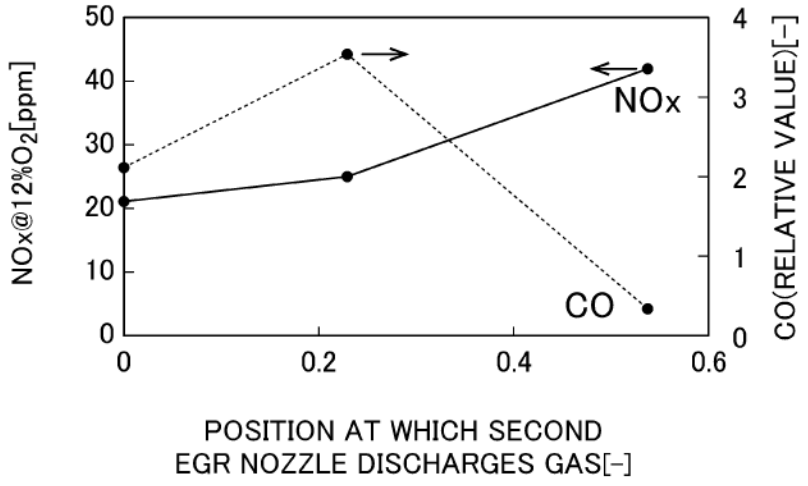

RELATIVE VALUE IN CASE WHERE SECOND EGR NOZZLE DOES NOT DISCHARGE GAS IS SET TO 1

FIG. 8

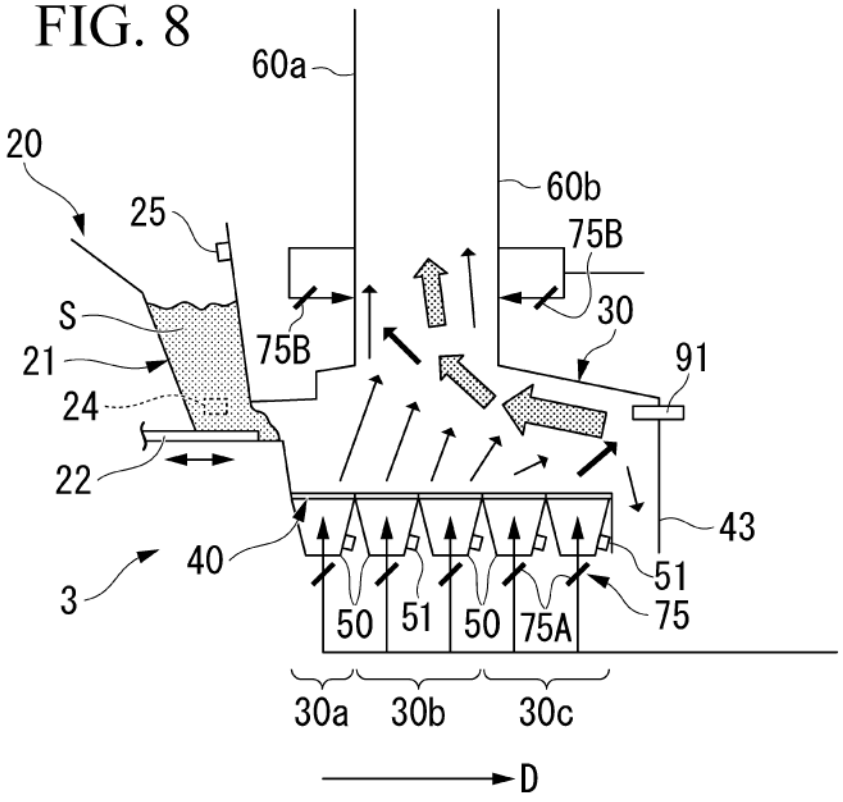
60a
20
60b
25
75B
S
30
75B
21
91
24
22
43
40
51
3
75
50
51
50
75A
30a
30b
30c
D

FIG. 9

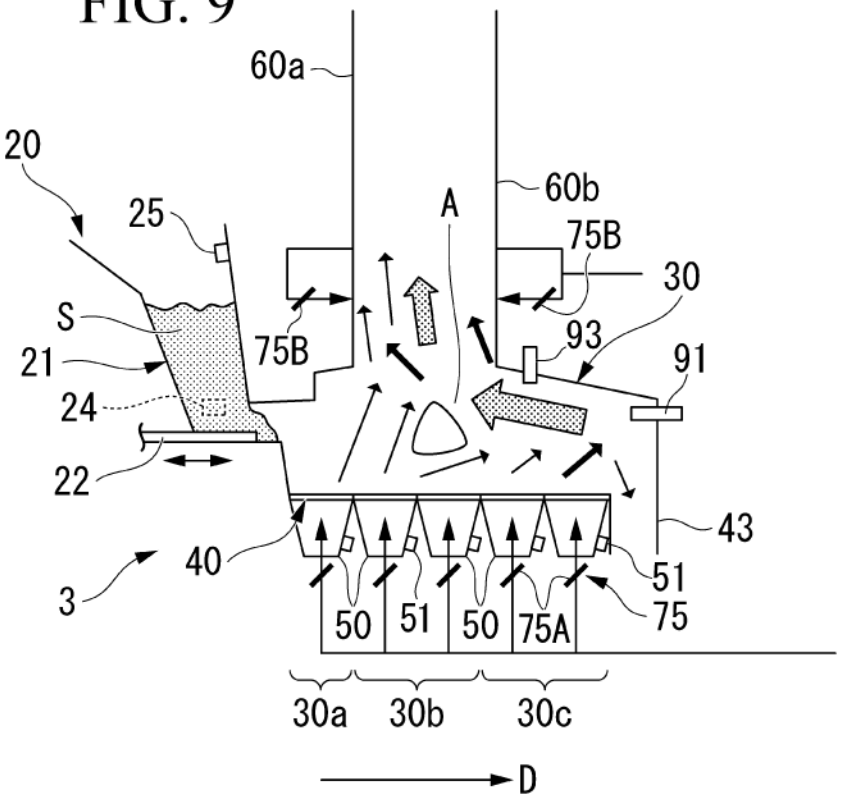
60a
20
60b
A
25
75B
30
S
93
75B
21
91
24
22
43
40
51
3
75
50
51
50
75A
30a
30b
30c
D

FIG. 10

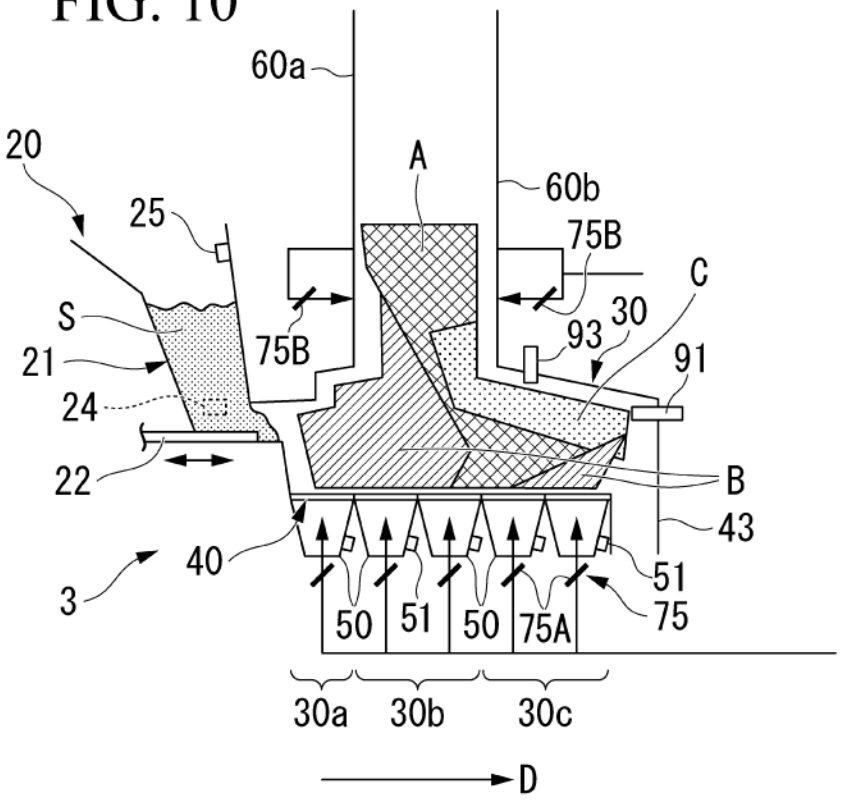
60a
20
A
60b
25
75B
C
S
75B
93
30
21
91
24
22
B
43
40
51
3
50
51
50
75A
75
30a
30b
30c
D

FIG. 11

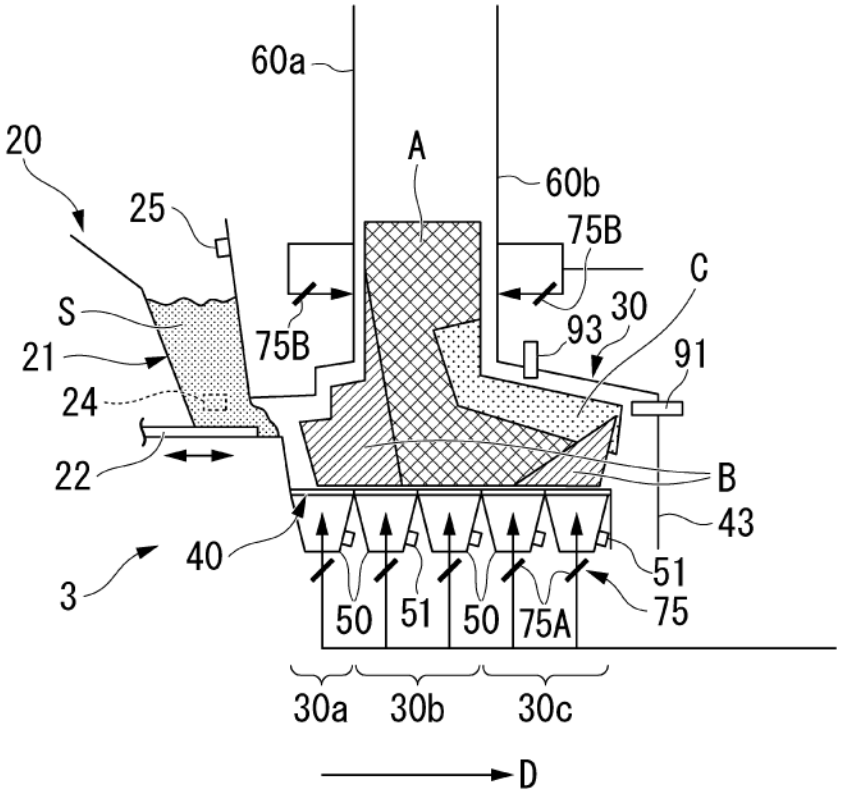
60a
20
A
60b
25
75B
C
S
75B
93
30
21
91
24
22
B
43
40
51
3
50
51
50
75A
75
30a
30b
30c
D

FIG. 12

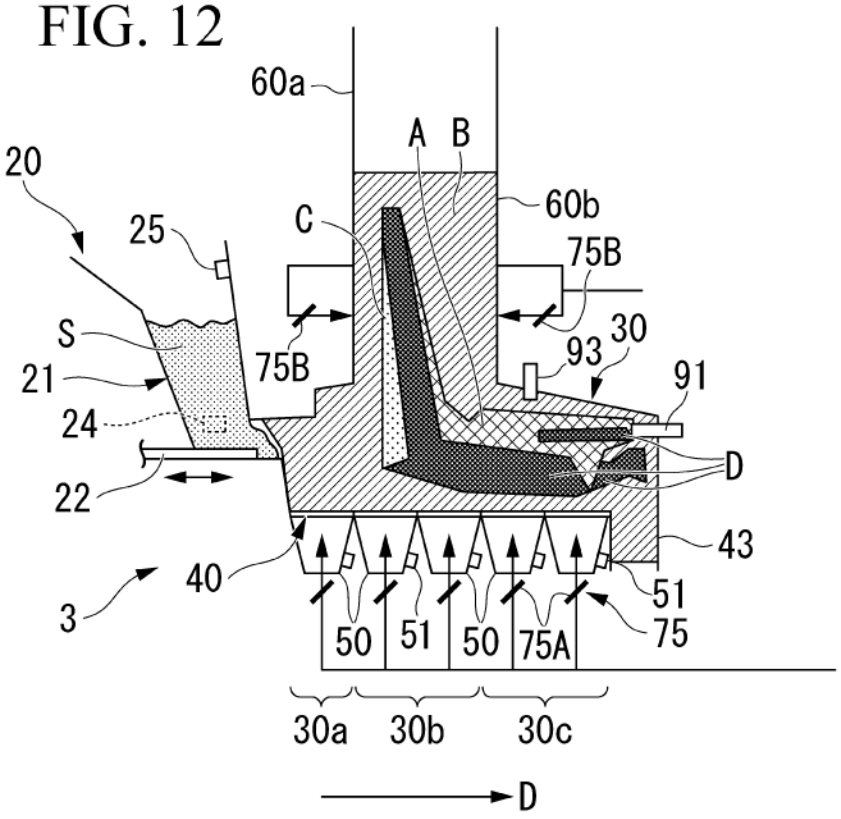
60a
A
B
20
25
C
60b
75B
S
75B
93
30
21
91
24
D
22
43
40
51
3
50
51
50
75A
75
30a
30b
30c
D

FIG. 13

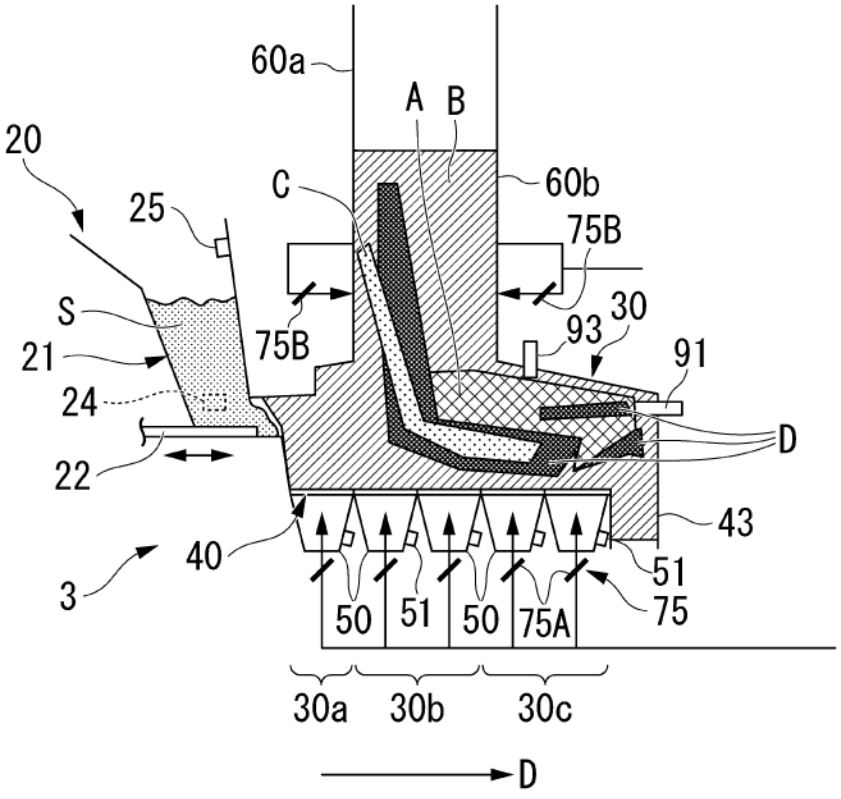
60a
A
B
20
25
C
60b
75B
S
75B
93
30
21
91
24
D
22
43
40
51
3
50
51
50
75A
75
30a
30b
30c
D

FIG. 14

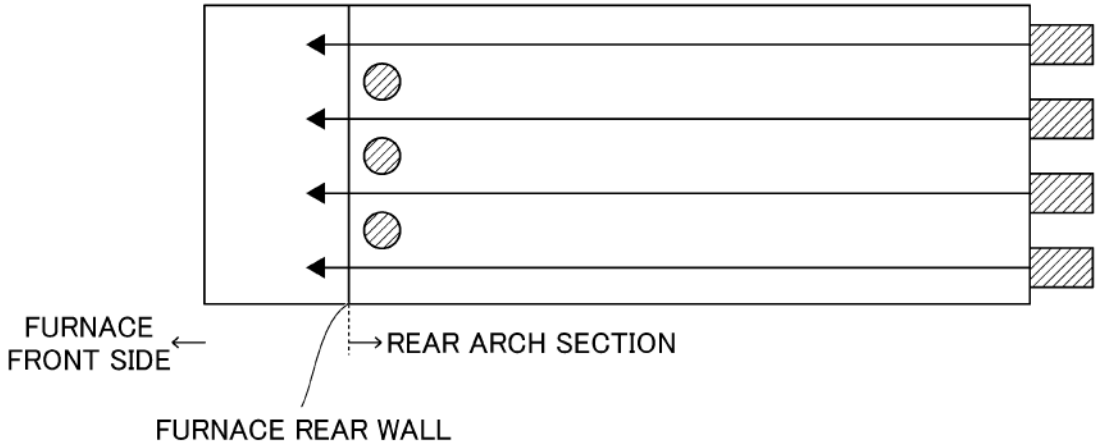
FURNACE
FRONT SIDE
REAR ARCH SECTION
FURNACE REAR WALL

FIG. 15

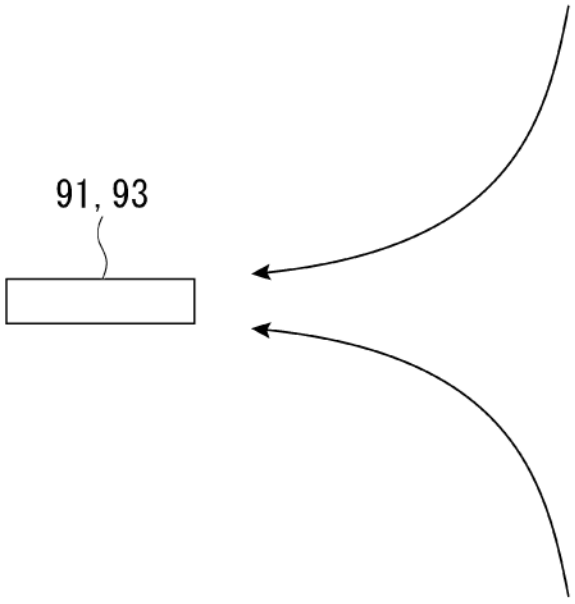
91, 93

FIG. 16

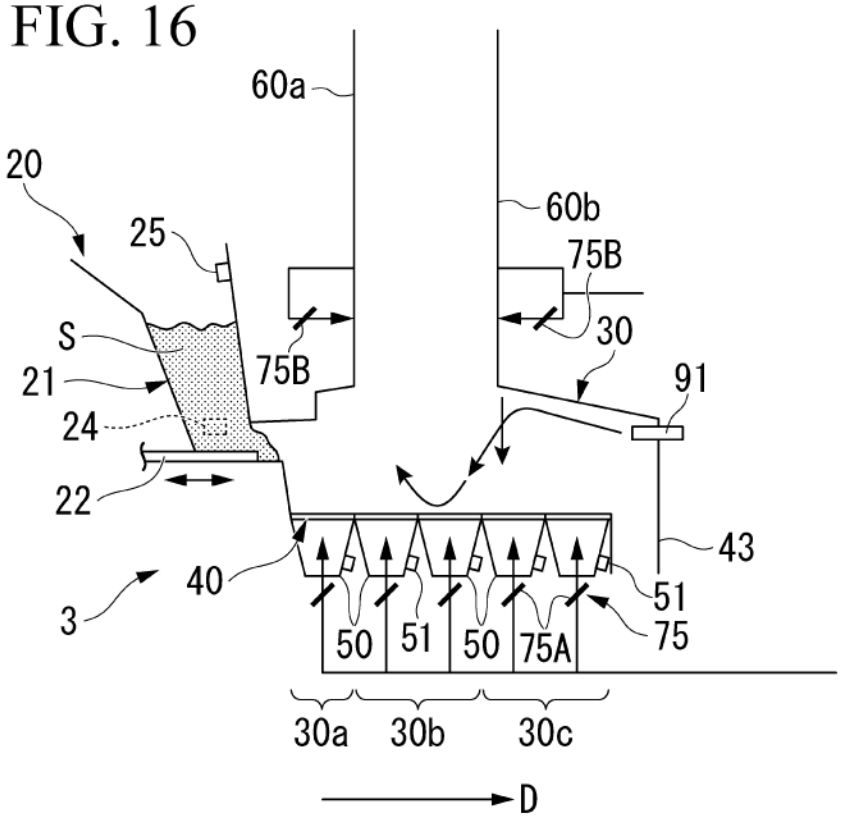
60a
20
60b
25
75B
S
30
75B
21
91
24
22
43
40
51
3
50
51
50
75A
75
30a
30b
30c
D

FIG. 17

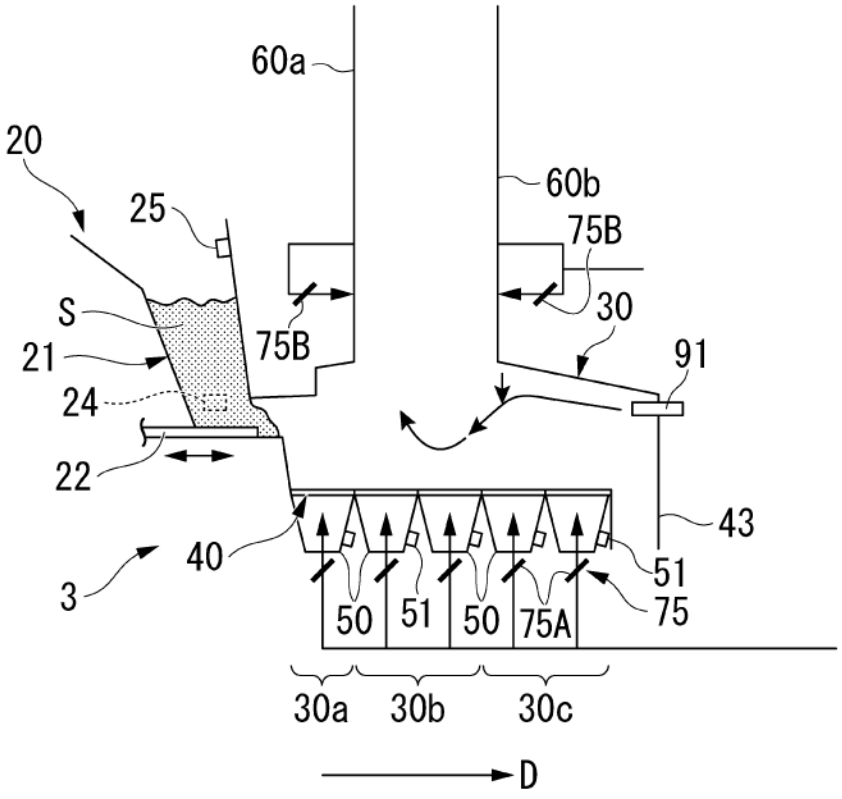
60a
20
60b
25
75B
S
30
75B
21
91
24
22
43
40
51
3
50
51
50
75A
75
30a
30b
30c
D

FIG. 18

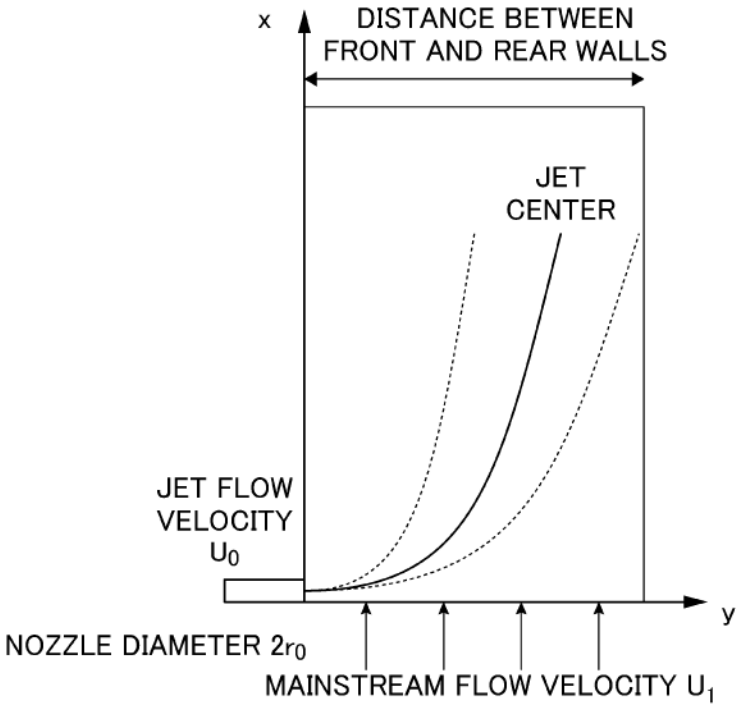
x
DISTANCE BETWEEN
FRONT AND REAR WALLS
JET
CENTER
JET FLOW
VELOCITY
U_0
y
NOZZLE DIAMETER $2r_0$
MAINSTREAM FLOW VELOCITY U_1

FIG. 19

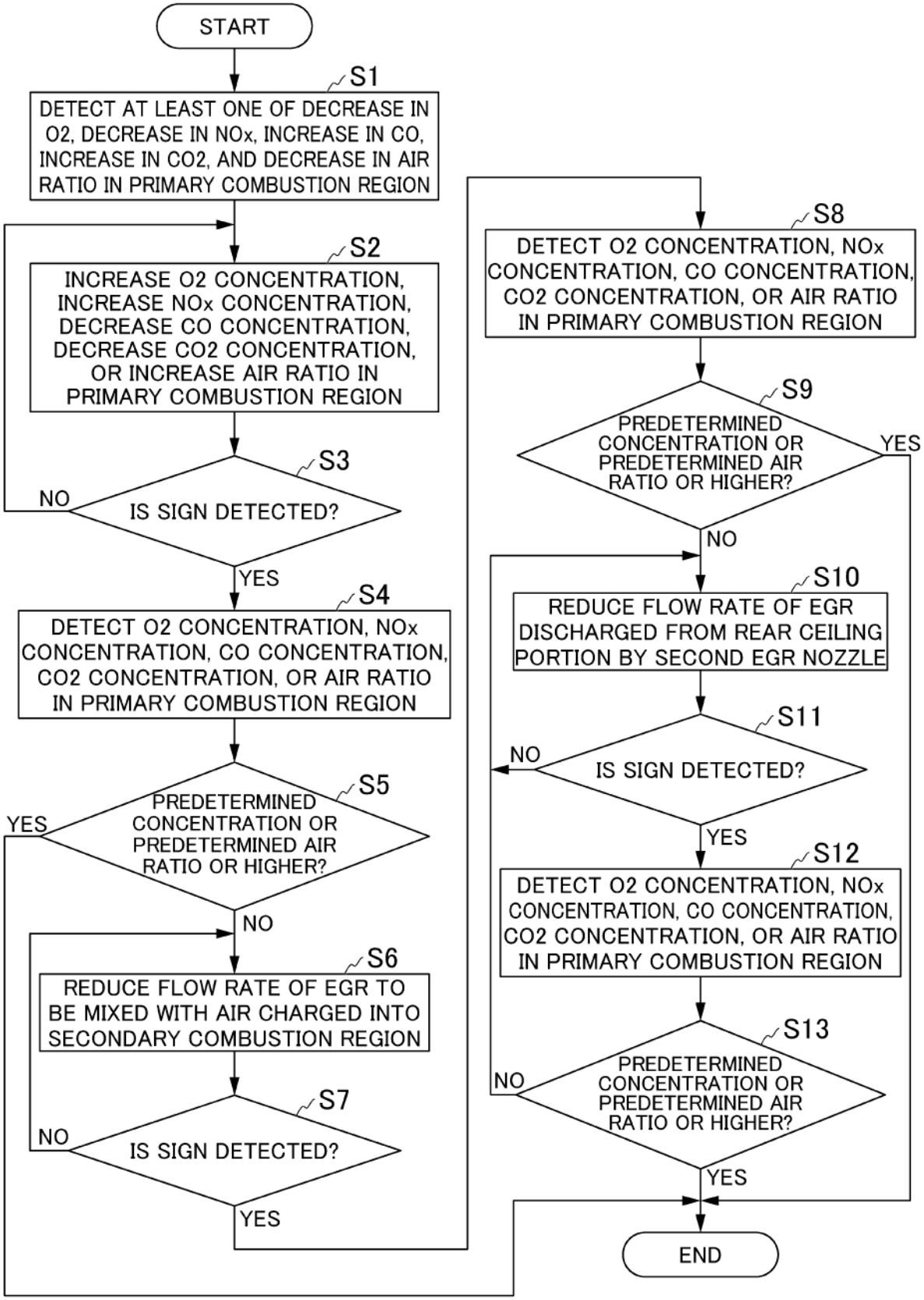
START
S1
DETECT AT LEAST ONE OF DECREASE IN O2, DECREASE IN NOx, INCREASE IN CO, INCREASE IN CO2, AND DECREASE IN AIR RATIO IN PRIMARY COMBUSTION REGION
S2
INCREASE O2 CONCENTRATION, INCREASE NOx CONCENTRATION, DECREASE CO CONCENTRATION, DECREASE CO2 CONCENTRATION, OR INCREASE AIR RATIO IN PRIMARY COMBUSTION REGION
S3
IS SIGN DETECTED?
NO
YES
S4
DETECT O2 CONCENTRATION, NOx CONCENTRATION, CO CONCENTRATION, CO2 CONCENTRATION, OR AIR RATIO IN PRIMARY COMBUSTION REGION
S5
PREDETERMINED CONCENTRATION OR PREDETERMINED AIR RATIO OR HIGHER?
YES
NO
S6
REDUCE FLOW RATE OF EGR TO BE MIXED WITH AIR CHARGED INTO SECONDARY COMBUSTION REGION
S7
IS SIGN DETECTED?
NO
YES
S8
DETECT O2 CONCENTRATION, NOx CONCENTRATION, CO CONCENTRATION, CO2 CONCENTRATION, OR AIR RATIO IN PRIMARY COMBUSTION REGION
S9
PREDETERMINED CONCENTRATION OR PREDETERMINED AIR RATIO OR HIGHER?
YES
NO
S10
REDUCE FLOW RATE OF EGR DISCHARGED FROM REAR CEILING PORTION BY SECOND EGR NOZZLE
S11
IS SIGN DETECTED?
NO
YES
S12
DETECT O2 CONCENTRATION, NOx CONCENTRATION, CO CONCENTRATION, CO2 CONCENTRATION, OR AIR RATIO IN PRIMARY COMBUSTION REGION
S13
PREDETERMINED CONCENTRATION OR PREDETERMINED AIR RATIO OR HIGHER?
NO
YES
END

FIG. 20

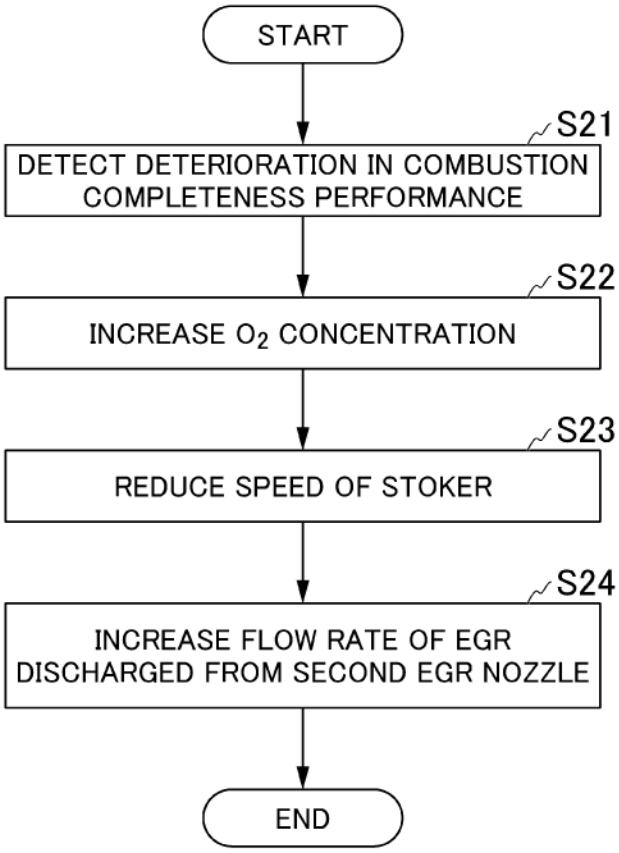
START
S21
DETECT DETERIORATION IN COMBUSTION COMPLETENESS PERFORMANCE
S22
INCREASE O_2 CONCENTRATION
S23
REDUCE SPEED OF STOKER
S24
INCREASE FLOW RATE OF EGR DISCHARGED FROM SECOND EGR NOZZLE
END

FIG. 21

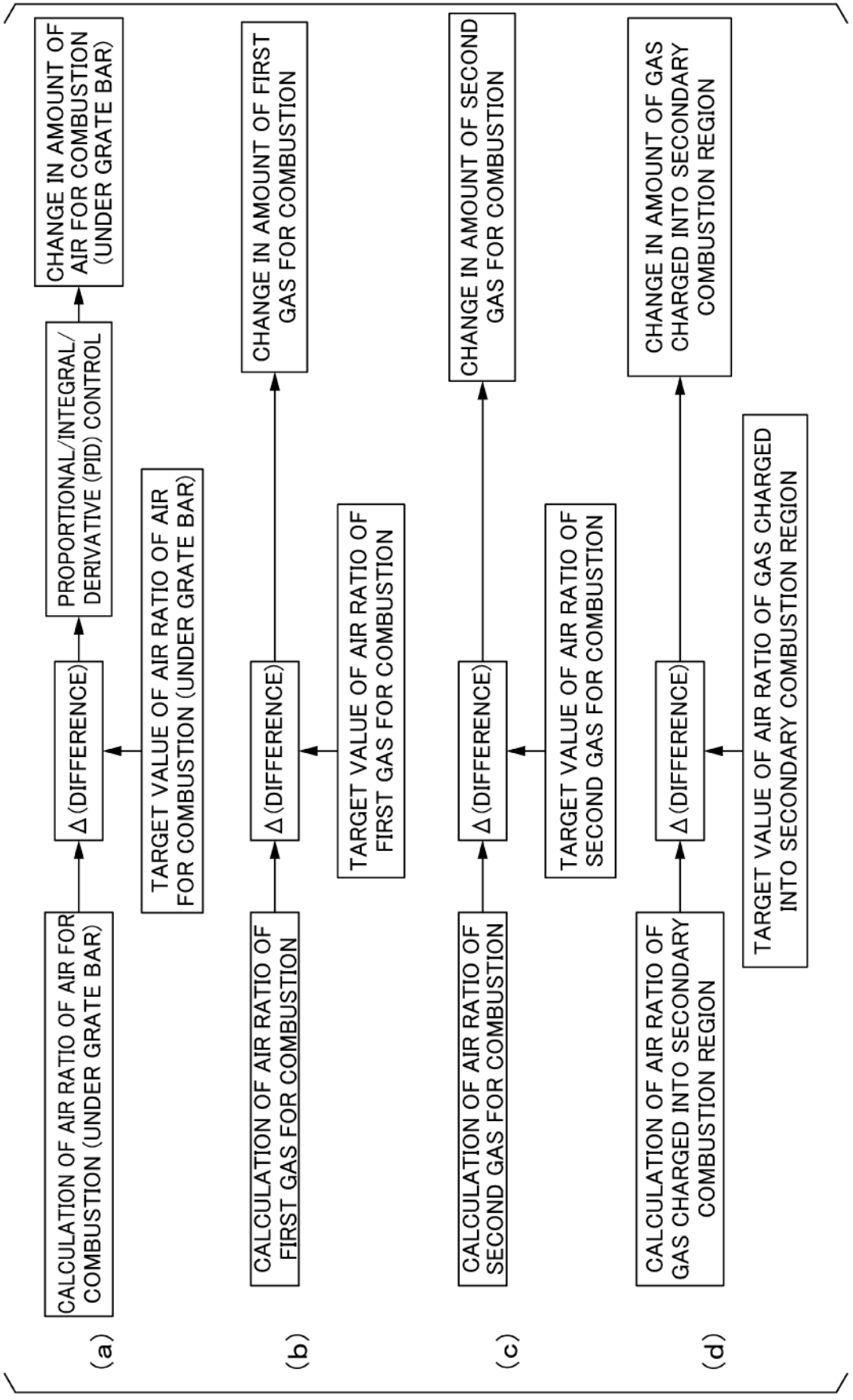
(a)
CALCULATION OF AIR RATIO OF AIR FOR COMBUSTION (UNDER GRATE BAR)
Δ (DIFFERENCE)
TARGET VALUE OF AIR RATIO OF AIR FOR COMBUSTION (UNDER GRATE BAR)
PROPORTIONAL/INTEGRAL/ DERIVATIVE (PID) CONTROL
CHANGE IN AMOUNT OF AIR FOR COMBUSTION (UNDER GRATE BAR)
(b)
CALCULATION OF AIR RATIO OF FIRST GAS FOR COMBUSTION
Δ (DIFFERENCE)
TARGET VALUE OF AIR RATIO OF FIRST GAS FOR COMBUSTION
CHANGE IN AMOUNT OF FIRST GAS FOR COMBUSTION
(c)
CALCULATION OF AIR RATIO OF SECOND GAS FOR COMBUSTION
Δ (DIFFERENCE)
TARGET VALUE OF AIR RATIO OF SECOND GAS FOR COMBUSTION
CHANGE IN AMOUNT OF SECOND GAS FOR COMBUSTION
(d)
CALCULATION OF AIR RATIO OF GAS CHARGED INTO SECONDARY COMBUSTION REGION
Δ (DIFFERENCE)
TARGET VALUE OF AIR RATIO OF GAS CHARGED INTO SECONDARY COMBUSTION REGION
CHANGE IN AMOUNT OF GAS CHARGED INTO SECONDARY COMBUSTION REGION

FIG. 22

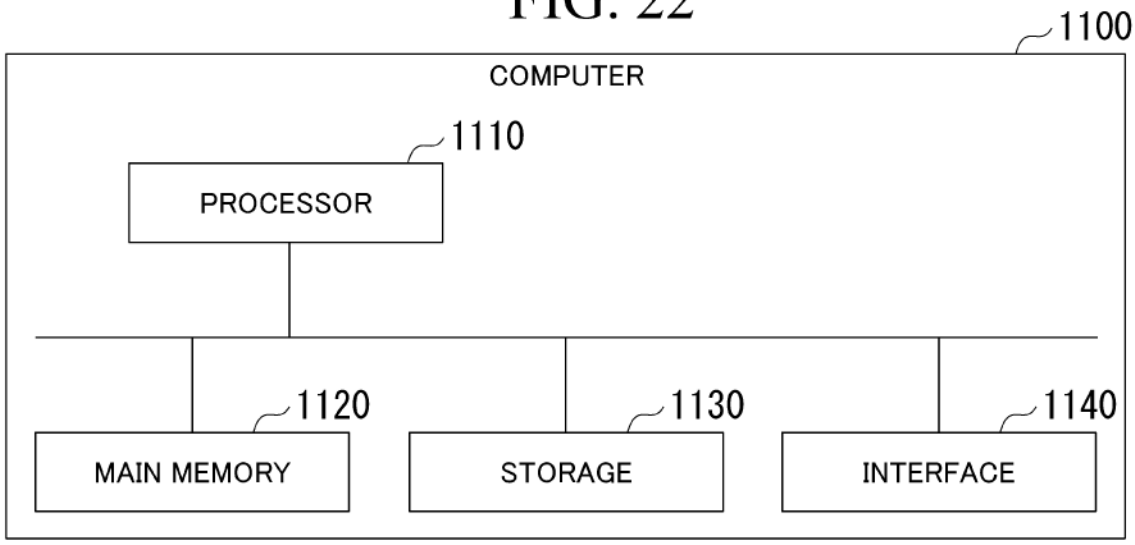
1100
COMPUTER
1110
PROCESSOR
1120
MAIN MEMORY
1130
STORAGE
1140
INTERFACE