(12) INTERNATIONAL APPLICATION PUBLISHED UNDER THE PATENT COOPERATION TREATY (PCT)

(19) World Intellectual Property Organization
International Bureau

(43) International Publication Date
31 December 2008 (31.12.2008)

PCT

(10) International Publication Number
WO 2009/001050 A3

(51) International Patent Classification:
A47K 11/02 (2006.01)

(21) International Application Number:
PCT/GB2008/002132

(22) International Filing Date:
23 June 2008 (23.06.2008)

(25) Filing Language: English

(26) Publication Language: English

(30) Priority Data:
0712263.3 22 June 2007 (22.06.2007) GB

(71) Applicant *(for all designated States except US)*: **THE BROWN CORPORATION LIMITED** [GB/GB]; 52 Great Eastern Street, London EC2A 3EP (GB).

(72) Inventor; and

(75) Inventor/Applicant *(for US only)*: **WHARTON, Richard** [GB/GB]; 40 Ovington Street, Chelsea, London SW3 2JB (GB).

(74) Agent: **THOMSON, Neill, David**; Boult Wade Tennant, Verulam Gardens, 70 Gray's Inn Road, London WC1X 8BT (GB).

(81) Designated States *(unless otherwise indicated, for every kind of national protection available)*: AE, AG, AL, AM, AO, AT, AU, AZ, BA, BB, BG, BH, BR, BW, BY, BZ, CA, CH, CN, CO, CR, CU, CZ, DE, DK, DM, DO, DZ, EC, EE, EG, ES, FI, GB, GD, GE, GH, GM, GT, HN, HR, HU, ID, IL, IN, IS, JP, KE, KG, KM, KN, KP, KR, KZ, LA, LC, LK, LR, LS, LT, LU, LY, MA, MD, ME, MG, MK, MN, MW, MX, MY, MZ, NA, NG, NI, NO, NZ, OM, PG, PH, PL, PT, RO, RS, RU, SC, SD, SE, SG, SK, SL, SM, SV, SY, TJ, TM, TN, TR, TT, TZ, UA, UG, US, UZ, VC, VN, ZA, ZM, ZW.

(84) Designated States *(unless otherwise indicated, for every kind of regional protection available)*: ARIPO (BW, GH, GM, KE, LS, MW, MZ, NA, SD, SL, SZ, TZ, UG, ZM, ZW), Eurasian (AM, AZ, BY, KG, KZ, MD, RU, TJ, TM), European (AT, BE, BG, CH, CY, CZ, DE, DK, EE, ES, FI, FR, GB, GR, HR, HU, IE, IS, IT, LT, LU, LV, MC, MT, NL, NO, PL, PT, RO, SE, SI, SK, TR), OAPI (BF, BJ, CF, CG, CI, CM, GA, GN, GQ, GW, ML, MR, NE, SN, TD, TG).

Published:

— *with international search report (Art. 21(3))*

— *before the expiration of the time limit for amending the claims and to be republished in the event of receipt of amendments (Rule 48.2(h))*

(88) Date of publication of the international search report:
15 October 2009

(54) Title: A COMBINED TOILET AND SEAT APPARATUS

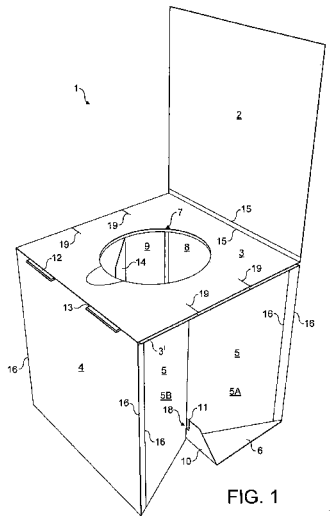

FIG. 1

(57) Abstract: A combined toilet and seat apparatus, capable of being transformed from a flat-pack configuration for storage and/or transportation to a box-like configuration for use. The apparatus comprises front and rear panels connected by respective side panels, which side panels are capable of forming inwardly-angled side panels to thereby provide support to a top panel connected to either of the front and/or rear panel, the top panel forming a seating platform and a base panel connected to either of the front or rear panel. The top panel and/or the base panel comprises one or more interlocking portions for interlocking the top panel and/or the base panel with one or both side panels to thereby maintain the apparatus in the box-like configuration.

WO 2009/001050 A3