(12) INTERNATIONAL APPLICATION PUBLISHED UNDER THE PATENT COOPERATION TREATY (PCT)

(19) World Intellectual Property Organization
International Bureau

(43) International Publication Date
25 August 2011 (25.08.2011)

PCT

(10) International Publication Number
WO 2011/102734 A1

(51) International Patent Classification:
B63B 27/24 (2006.01)

(21) International Application Number:
PCT/NO2011/000057

(22) International Filing Date:
17 February 2011 (17.02.2011)

(25) Filing Language: English

(26) Publication Language: English

(30) Priority Data:
20100235 17 February 2010 (17.02.2010) NO

(71) Applicant *(for all designated States except US)*: **THEMIS CREATE AS** [NO/NO]; Ystenesgata 14, N-6003 Ålesund (NO).

(72) Inventors; and

(75) Inventors/Applicants *(for US only)*: **NÆRØ, Inge-Svenn** [NO/NO]; Storegjerde 14, N-6010 Ålesund (NO). **ULSTEIN, Severin, Åkervik** [NO/NO]; Ystenesgata 14, N-6003 Ålesund (NO).

(74) Agents: **ONSAGERS AS** et al.; P.O.Box 6963 St. Olavs plass, N-0130 Oslo (NO).

(81) Designated States *(unless otherwise indicated, for every kind of national protection available)*: AE, AG, AL, AM, AO, AT, AU, AZ, BA, BB, BG, BH, BR, BW, BY, BZ, CA, CH, CL, CN, CO, CR, CU, CZ, DE, DK, DM, DO, DZ, EC, EE, EG, ES, FI, GB, GD, GE, GH, GM, GT, HN, HR, HU, ID, IL, IN, IS, JP, KE, KG, KM, KN, KP, KR, KZ, LA, LC, LK, LR, LS, LT, LU, LY, MA, MD, ME, MG, MK, MN, MW, MX, MY, MZ, NA, NG, NI, NO, NZ, OM, PE, PG, PH, PL, PT, RO, RS, RU, SC, SD, SE, SG, SK, SL, SM, ST, SV, SY, TH, TJ, TM, TN, TR, TT, TZ, UA, UG, US, UZ, VC, VN, ZA, ZM, ZW.

(84) Designated States *(unless otherwise indicated, for every kind of regional protection available)*: ARIPO (BW, GH, GM, KE, LR, LS, MW, MZ, NA, SD, SL, SZ, TZ, UG, ZM, ZW), Eurasian (AM, AZ, BY, KG, KZ, MD, RU, TJ, TM), European (AL, AT, BE, BG, CH, CY, CZ, DE, DK, EE, ES, FI, FR, GB, GR, HR, HU, IE, IS, IT, LT, LU, LV, MC, MK, MT, NL, NO, PL, PT, RO, RS, SE, SI, SK, SM, TR), OAPI (BF, BJ, CF, CG, CI, CM, GA, GN, GQ, GW, ML, MR, NE, SN, TD, TG).

Published:

— *with international search report (Art. 21(3))*

(54) **Title**: SUPPORTING DEVICE FOR SUPPORTING A LOAD TO STRUCTURE

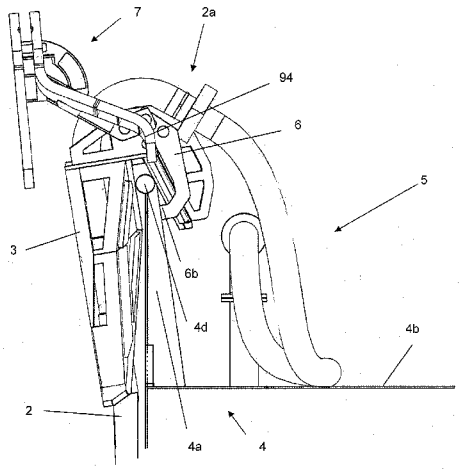

Fig. 8c

(57) **Abstract**: The invention relates to a supporting device for supporting a load (2) to a structure (4), comprising a body, a movement restraining device and an actuating device. The body (3) comprises a first abutment surface (30a) and a second abutment surface (31a), where the first and second abutment surfaces (30a, 31a) are at least partially faced towards each other forming parts of a mainly U-shaped surface (32) of the body (3). The body also comprises a load supporting device (33) for supporting the load (2) in relation to the body (3). The movement restraining device (6) is movably connected to the body (3) between a locked and unlocked position, wherein the movement restraining device (6) is configured to restrain the movement of the body (3) in relation to structure in its locked position. The actuating device (7) is movably connected to the body (3) and to the movement restraining device (6), for actuating the movement restraining device (6) between its locked and unlocked positions. A connection interface (90) is provided in the second end area (7b) of the actuating device (7), where the connection interface (90) is configured to be engaged with a remotely controlled actuator (9).

WO 2011/102734 A1