(12) INTERNATIONAL APPLICATION PUBLISHED UNDER THE PATENT COOPERATION TREATY (PCT)

(19) World Intellectual Property Organization
International Bureau

(43) International Publication Date
21 August 2025 (21.08.2025)

WIPO | PCT

(10) International Publication Number
WO 2025/175197 A1

(51) International Patent Classification:
G02B 6/00 (2006.01) *G02B 5/04* (2006.01)
G02B 6/26 (2006.01) *G02B 27/01* (2006.01)

(21) International Application Number:
PCT/US2025/016074

(22) International Filing Date:
14 February 2025 (14.02.2025)

(25) Filing Language: English

(26) Publication Language: English

(30) Priority Data:
63/554,618 16 February 2024 (16.02.2024) US
63/565,287 14 March 2024 (14.03.2024) US

(71) Applicant: **APPLIED MATERIALS, INC.** [US/US]; 3050 Bowers Avenue, Santa Clara, California 95054 (US).

(72) Inventors: **WANG, Evan**; c/o Applied Materials, Inc., Law Dept., M/s 1269, 3050 Bowers Avenue, Santa Clara, California 95054 (US). **MESSER, Kevin**; c/o Applied Materials, Inc., Law Dept., MS/1269, 3050 Bowers Avenue, Santa Clara, California 95054 (US). **BHARGAVA, Samarth**; c/o Applied Materials, Inc., Law Dept., M/S 1269, 3050 Bowers Avenue, Santa Clara, California 95054 (US). **SELL, David Alexander**; c/o Applied Materials, Inc., Law Dept., M/S 1269; 3050 Bowers Avenue, Santa Clara, California 95054 (US).

(74) Agent: **PATTERSON, B. Todd** et al.; 24 Greenway Plaza, Suite 1600, Houston, Texas 77046 (US).

(81) Designated States *(unless otherwise indicated, for every kind of national protection available)*: AE, AG, AL, AM, AO, AT, AU, AZ, BA, BB, BG, BH, BN, BR, BW, BY, BZ, CA, CH, CL, CN, CO, CR, CU, CV, CZ, DE, DJ, DK, DM, DO, DZ, EC, EE, EG, ES, FI, GB, GD, GE, GH, GM, GT, HN, HR, HU, ID, IL, IN, IQ, IR, IS, IT, JM, JO, JP, KE, KG, KH, KN, KP, KR, KW, KZ, LA, LC, LK, LR, LS, LU, LY, MA, MD, MG, MK, MN, MU, MW, MX, MY, MZ, NA, NG, NI, NO, NZ, OM, PA, PE, PG, PH, PL, PT, QA, RO,

WO 2025/175197 A1

(54) Title: PRISMS FOR INDEPENDENT CONTROL OVER VIRTUAL IMAGE AND WORLD LEAKAGE ANGLES

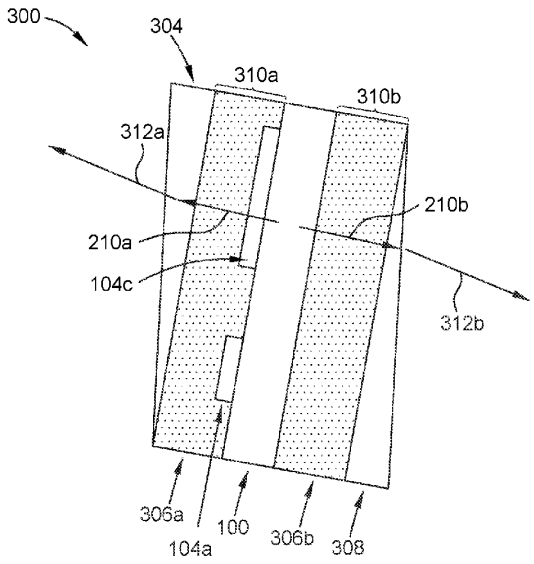

FIG. 3

(57) Abstract: In some embodiments, an optical device includes a waveguide having a first surface and a second surface opposing the first surface. The waveguide further includes an input coupler and an output coupler disposed over the first surface or the second surface. The optical device further includes a first prism disposed over at least the output coupler and over the first surface. The first prism is operable to increase a first projection angle of an image relative to a horizontal plane of the waveguide. The optical device further includes a second prism disposed under at least the output coupler and under the second surface. The second prism is operable to increase the second projection angle of light leakage relative to the horizontal plane of the waveguide.

[Continued on next page]

RS, RU, RW, SA, SC, SD, SE, SG, SK, SL, ST, SV, SY, TH, TJ, TM, TN, TR, TT, TZ, UA, UG, US, UY, UZ, VC, VN, WS, ZA, ZM, ZW.

(84) **Designated States** *(unless otherwise indicated, for every kind of regional protection available)*: ARIPO (BW, CV, GH, GM, KE, LR, LS, MW, MZ, NA, RW, SC, SD, SL, ST, SZ, TZ, UG, ZM, ZW), Eurasian (AM, AZ, BY, KG, KZ, RU, TJ, TM), European (AL, AT, BE, BG, CH, CY, CZ, DE, DK, EE, ES, FI, FR, GB, GR, HR, HU, IE, IS, IT, LT, LU, LV, MC, ME, MK, MT, NL, NO, PL, PT, RO, RS, SE, SI, SK, SM, TR), OAPI (BF, BJ, CF, CG, CI, CM, GA, GN, GQ, GW, KM, ML, MR, NE, SN, TD, TG).

Published:

— *with international search report (Art. 21(3))*