FIG. 1

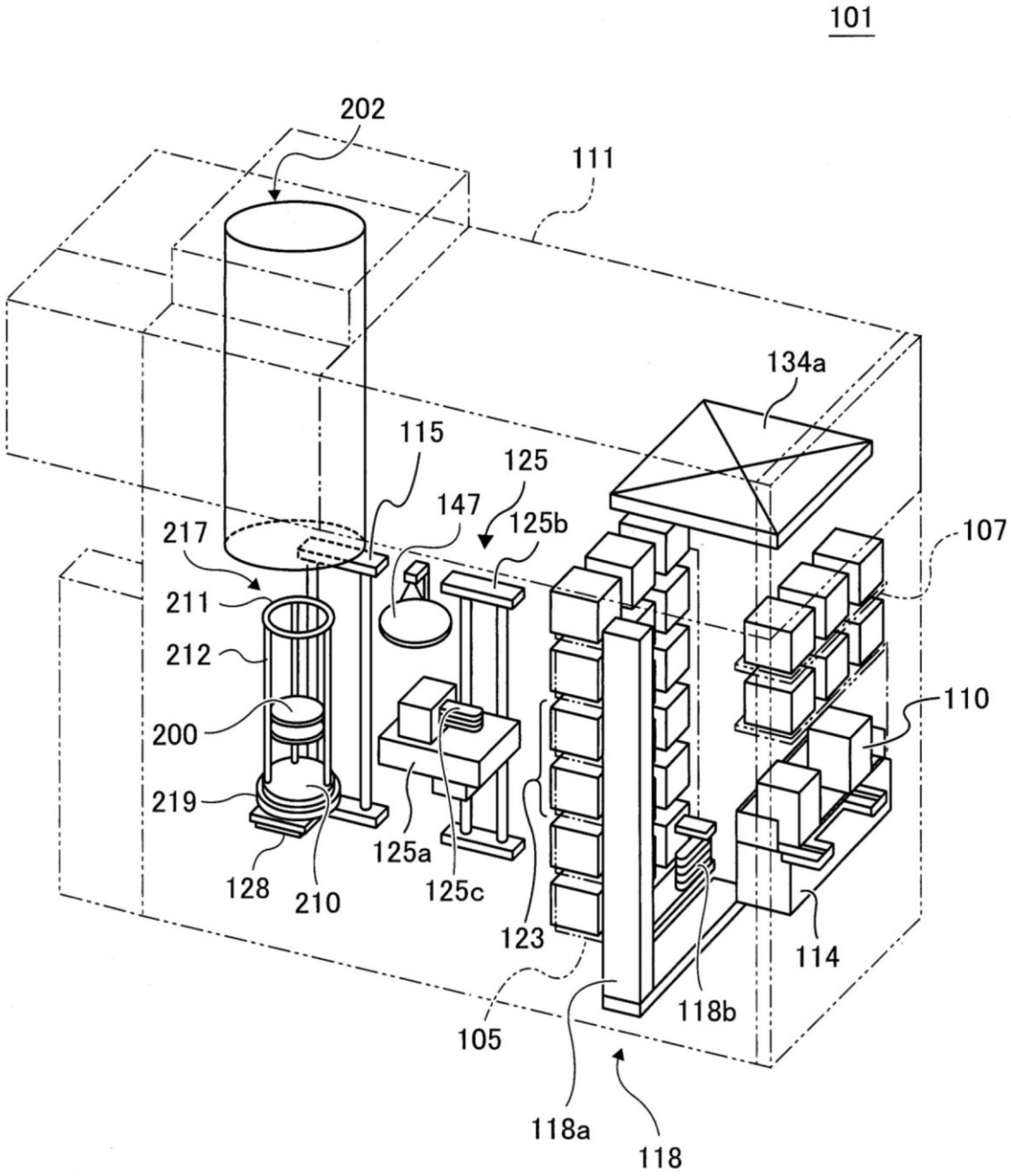
101
202
111
134a
115
125
147
125b
107
217
211
212
110
200
219
125a
125c
128
210
123
114
118b
105
118a
118

FIG. 2

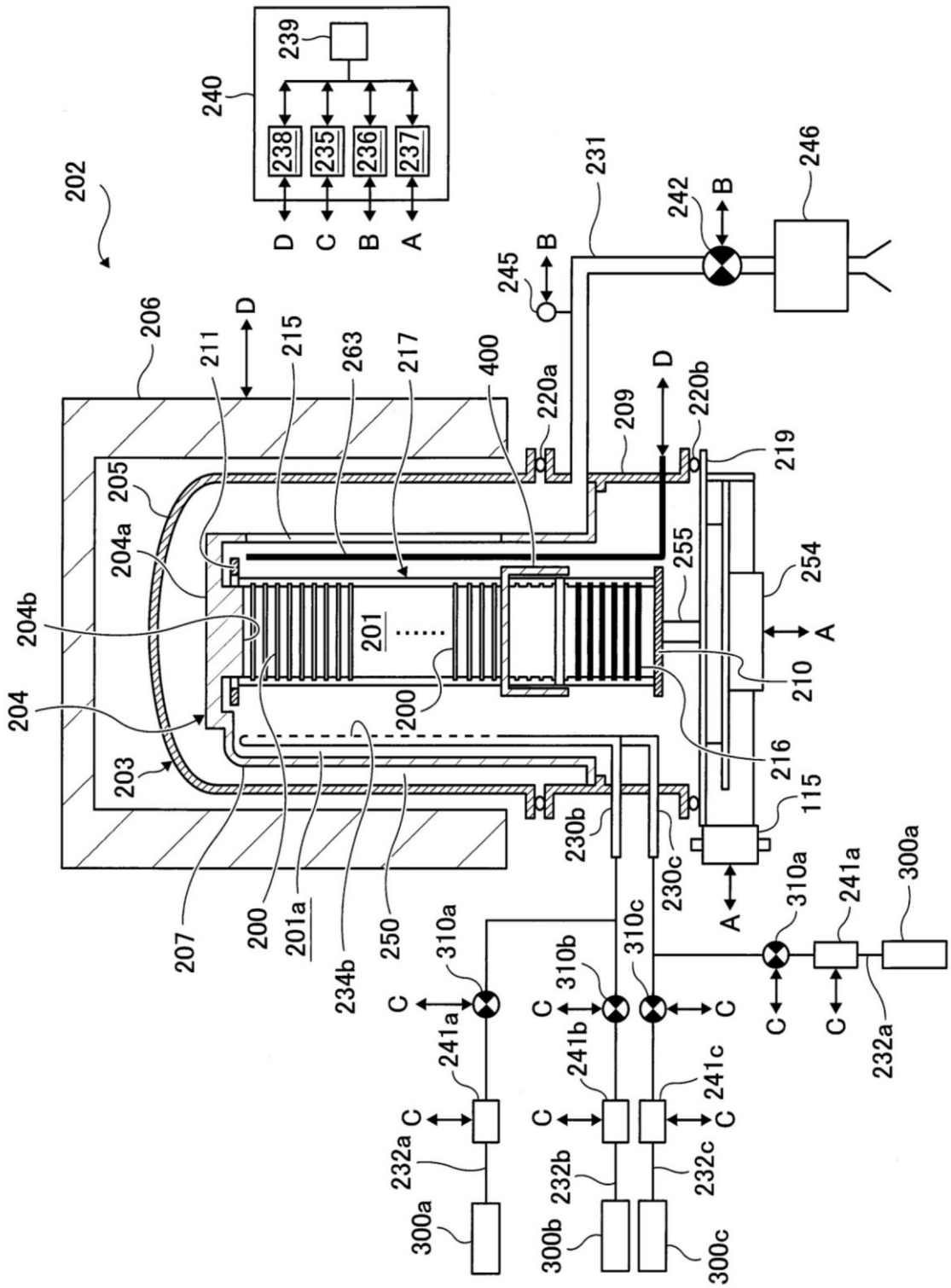
202
240
239
238
235
236
237
D
C
B
A
206
211
215
263
217
400
220a
209
220b
219
205
204a
204b
204
203
201
200
255
254
210
216
115
230b
230c
207
201a
234b
250
310a
310b
310c
241a
241b
241c
232a
232b
232c
300a
300b
300c
231
242
245
246

FIG. 3

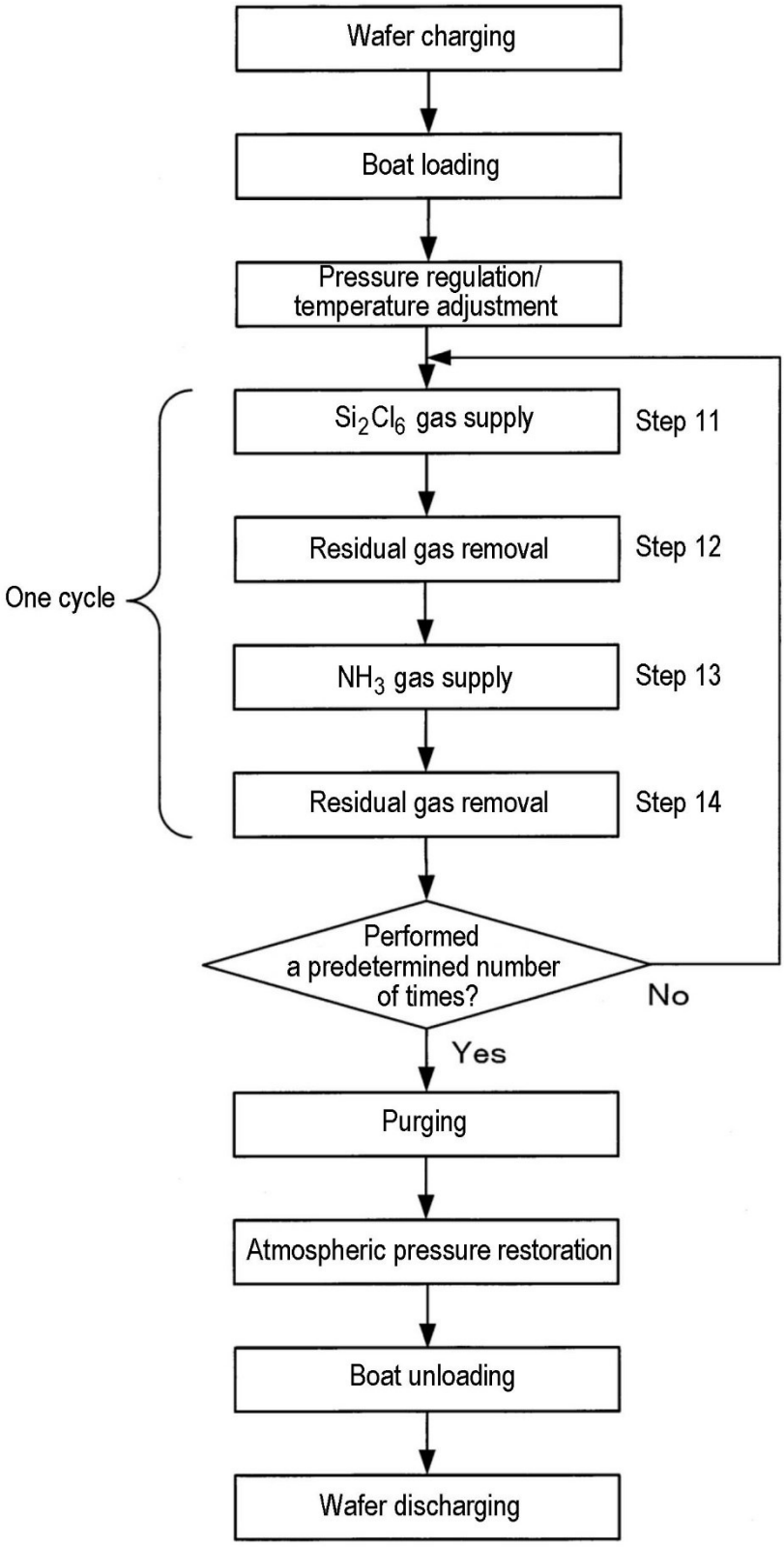
Wafer charging
Boat loading
Pressure regulation/ temperature adjustment
Si_2Cl_6 gas supply
Step 11
Residual gas removal
Step 12
One cycle
NH_3 gas supply
Step 13
Residual gas removal
Step 14
Performed a predetermined number of times?
No
Yes
Purging
Atmospheric pressure restoration
Boat unloading
Wafer discharging

FIG. 4

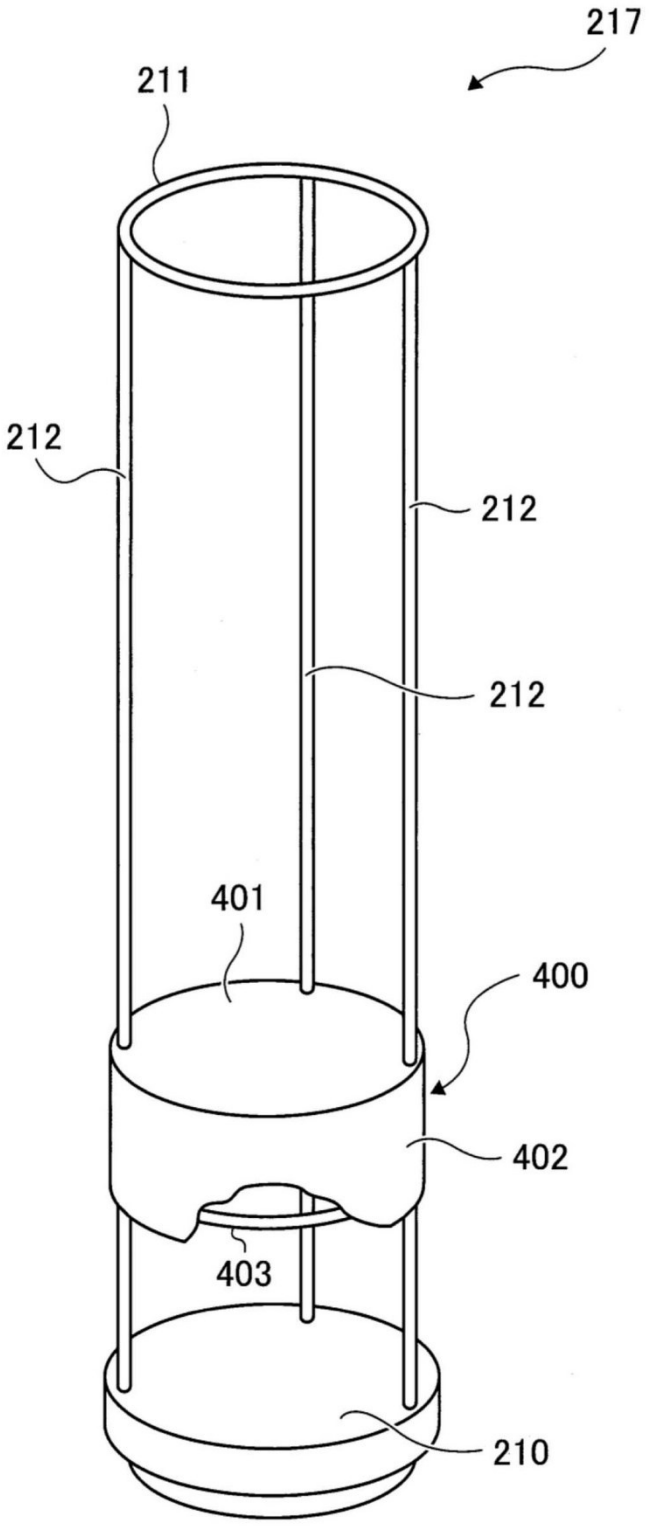

FIG. 5

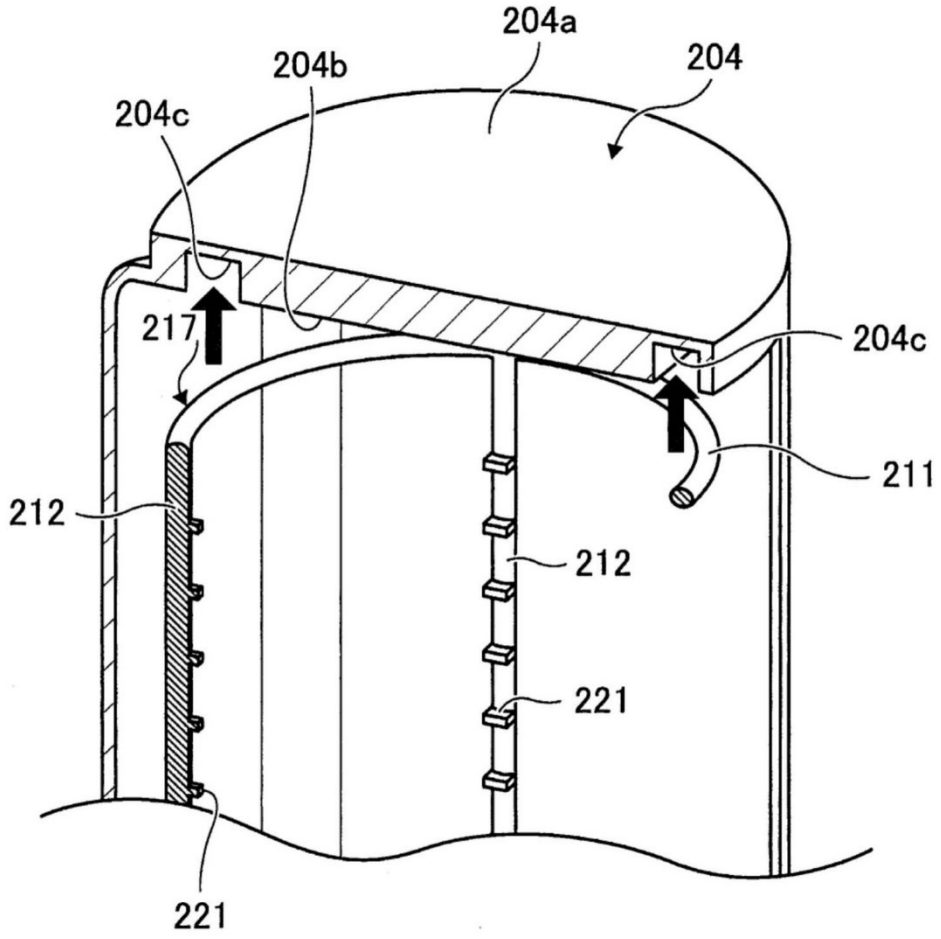

FIG. 6A

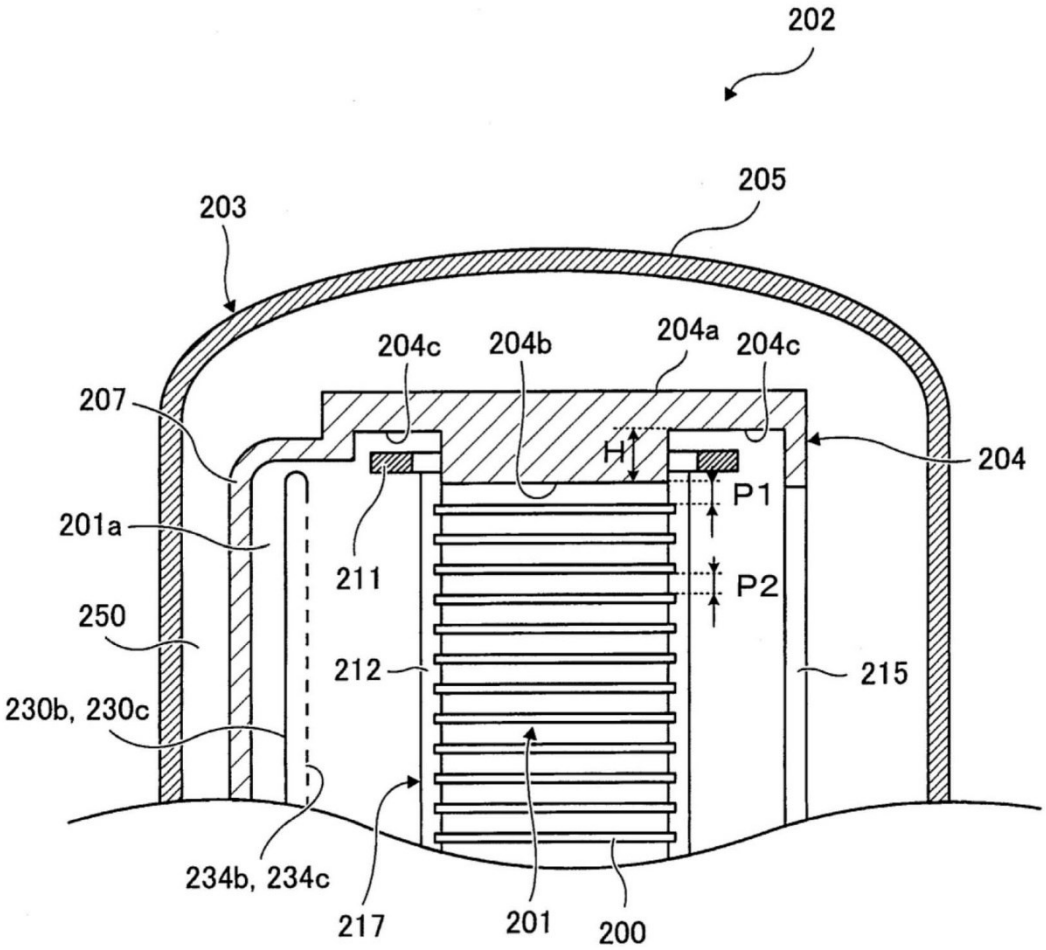
202
205
203
204c
204b
204a
204c
207
H
204
P1
201a
211
P2
250
212
215
230b, 230c
234b, 234c
217
201
200

FIG. 6B

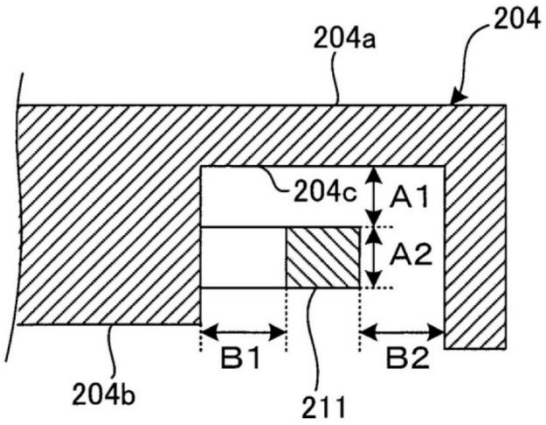
204a
204
204c
A1
A2
B1
B2
204b
211

FIG. 7

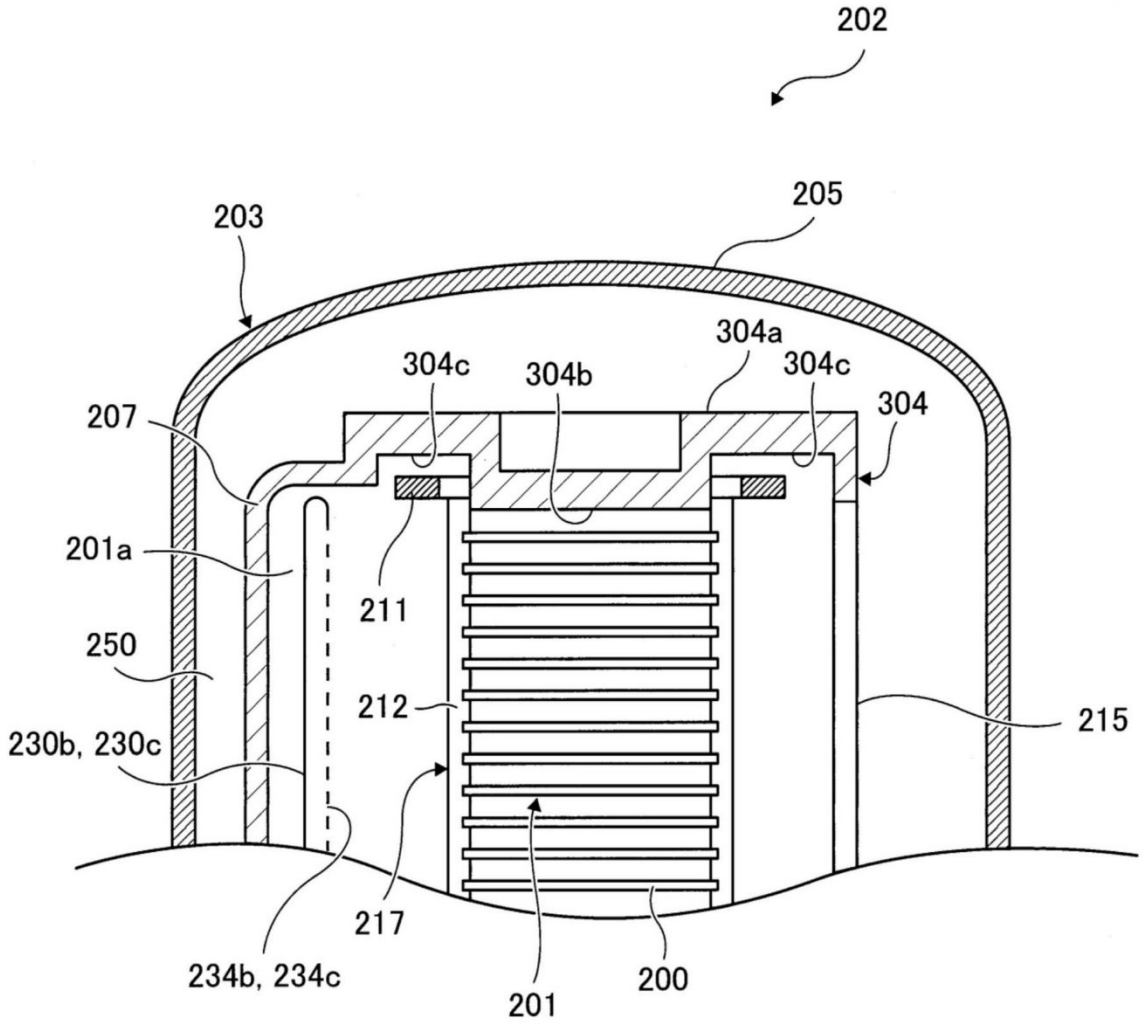
202
203
205
304a
304c
304b
304c
304
207
201a
211
250
212
215
230b, 230c
217
234b, 234c
201
200

FIG. 8

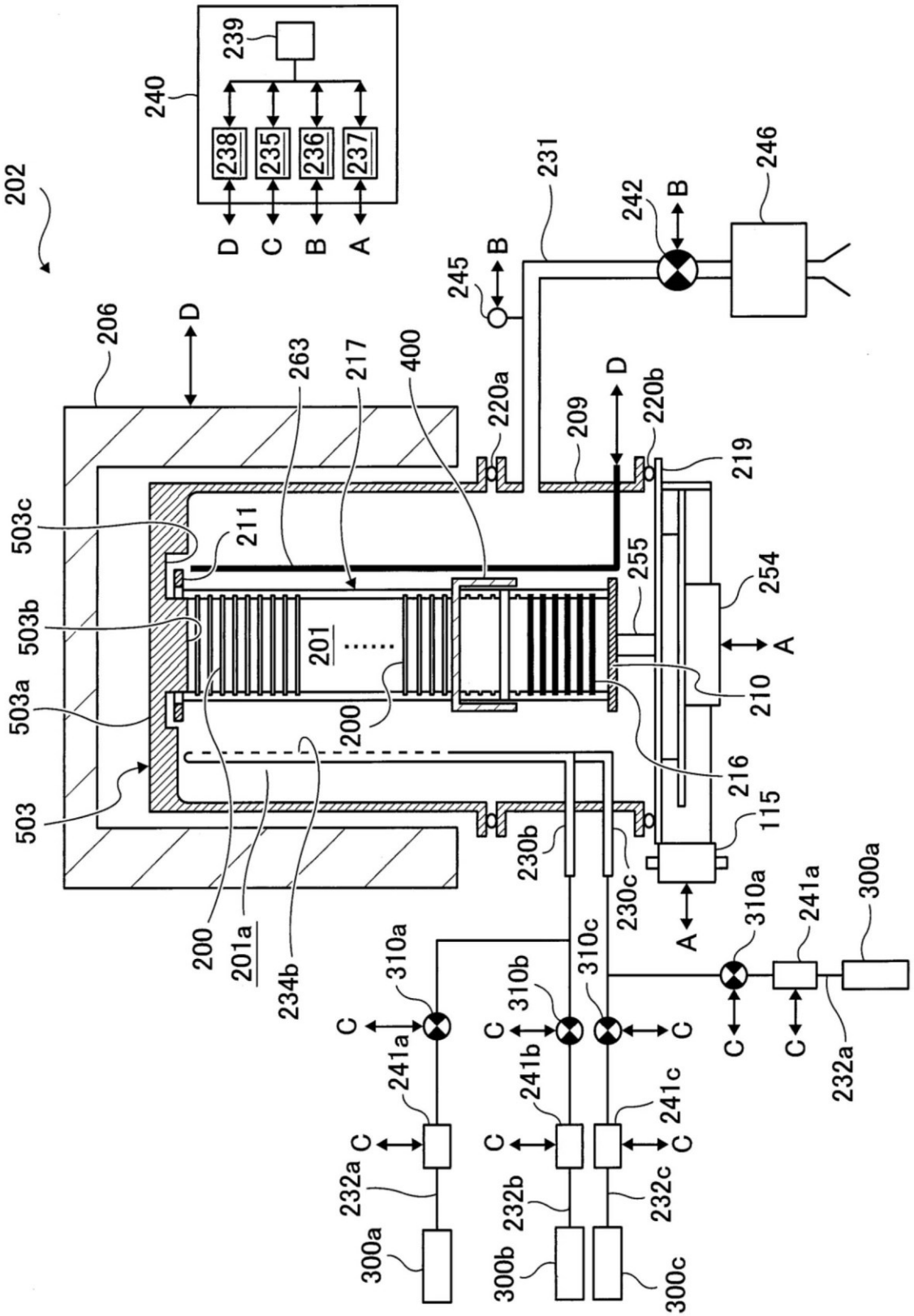
202
240
239
238
235
236
237
D
C
B
A
206
263
217
400
231
242
246
245
220a
209
220b
219
503c
211
255
254
503b
201
210
503a
200
216
503
115
230b
230c
200
201a
234b
310a
310b
310c
241a
241b
241c
232a
232b
232c
300a
300b
300c

FIG. 9A

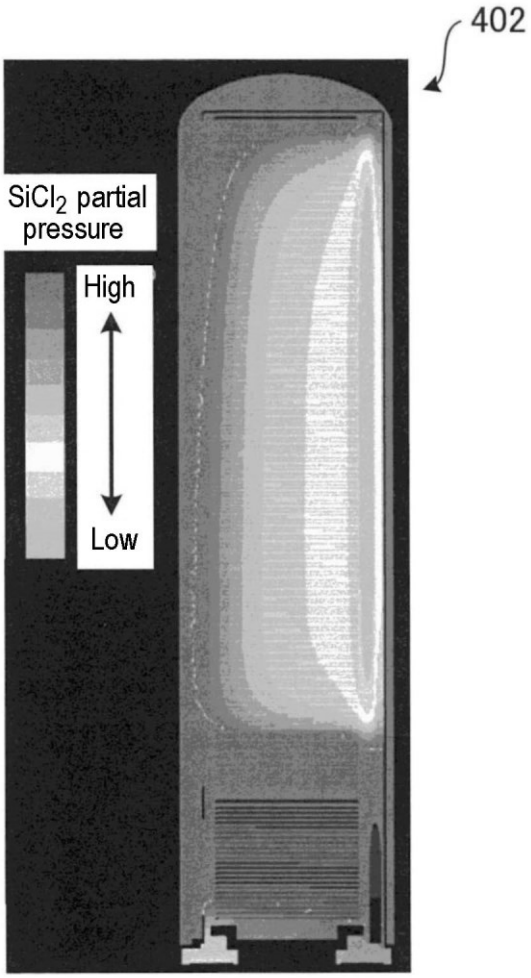
402
$SiCl_2$ partial pressure
High
Low

FIG. 9B

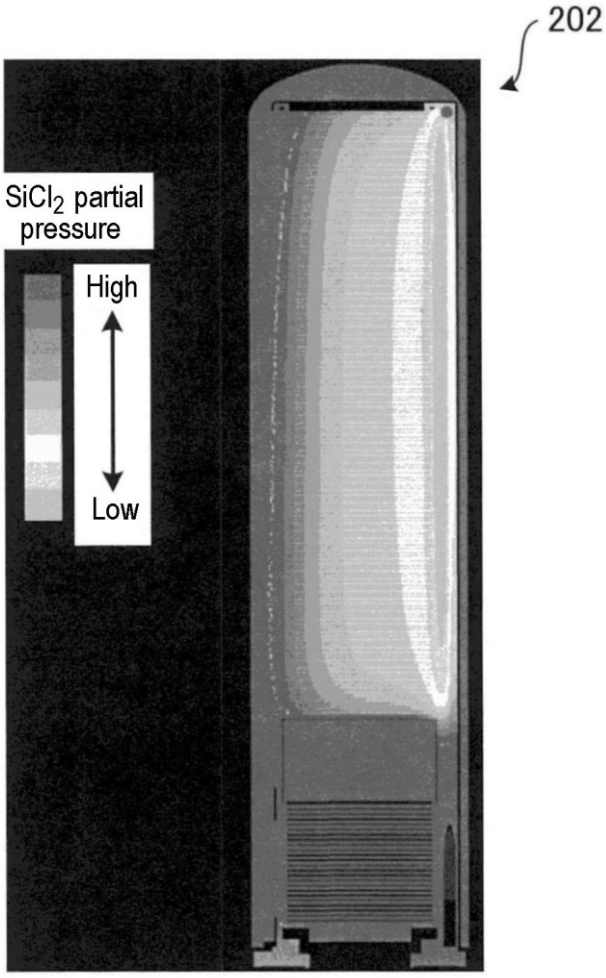
202
$SiCl_2$ partial pressure
High
Low

FIG. 10A

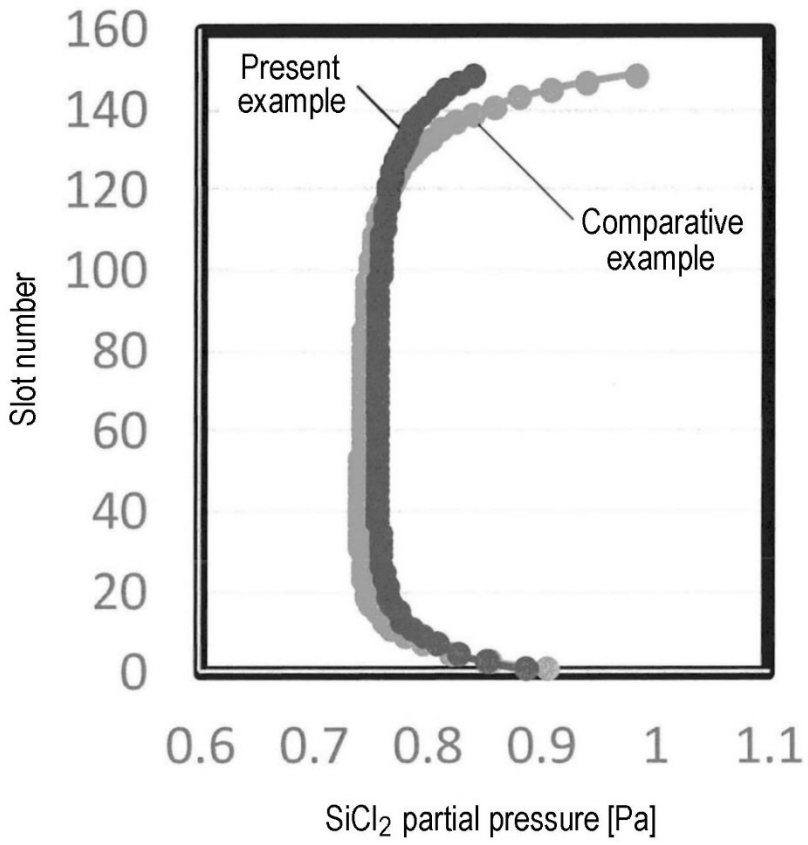
160
140
120
100
80
60
40
20
0
Slot number
Present example
Comparative example
0.6
0.7
0.8
0.9
1
1.1
SiCl2 partial pressure [Pa]

FIG. 10B

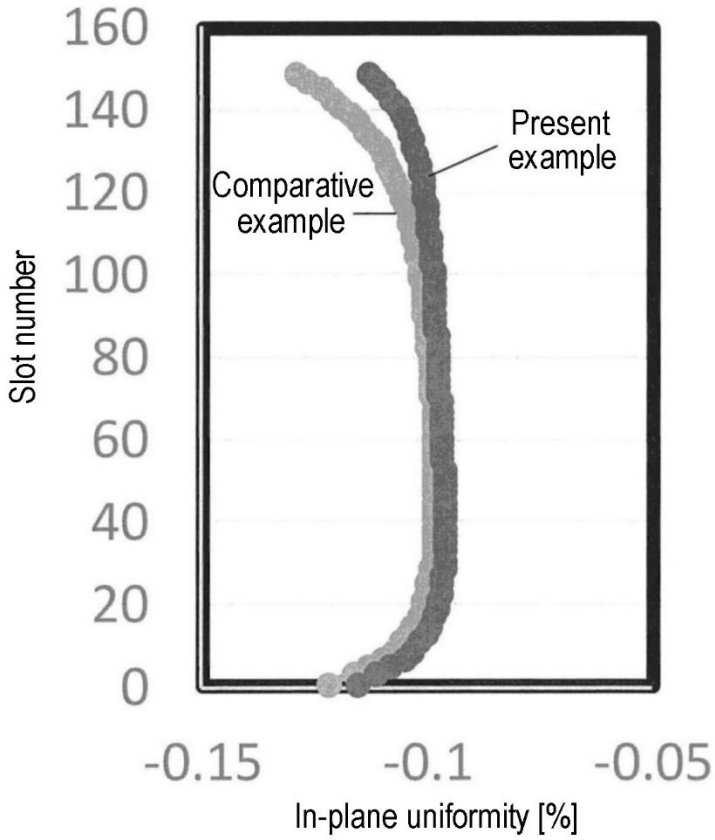
160
140
120
100
80
60
40
20
0
Slot number
Present example
Comparative example
-0.15
-0.1
-0.05
In-plane uniformity [%]