Fig.1

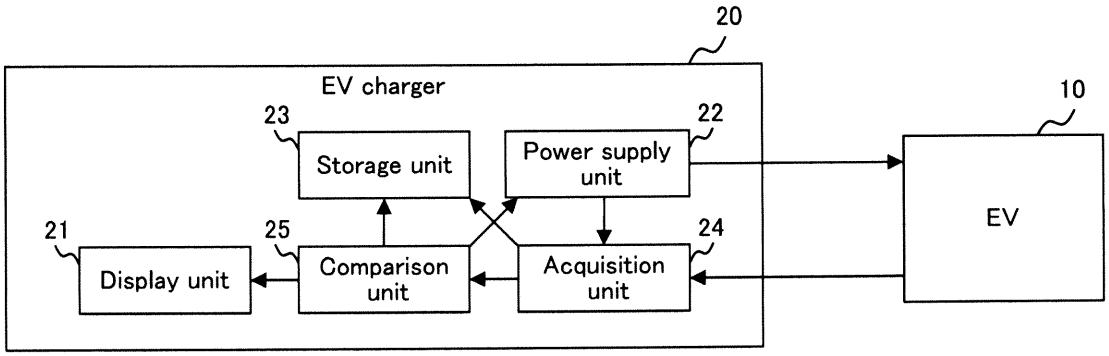
20
EV charger
23
Storage unit
22
Power supply unit
10
EV
21
Display unit
25
Comparison unit
24
Acquisition unit

Fig.2

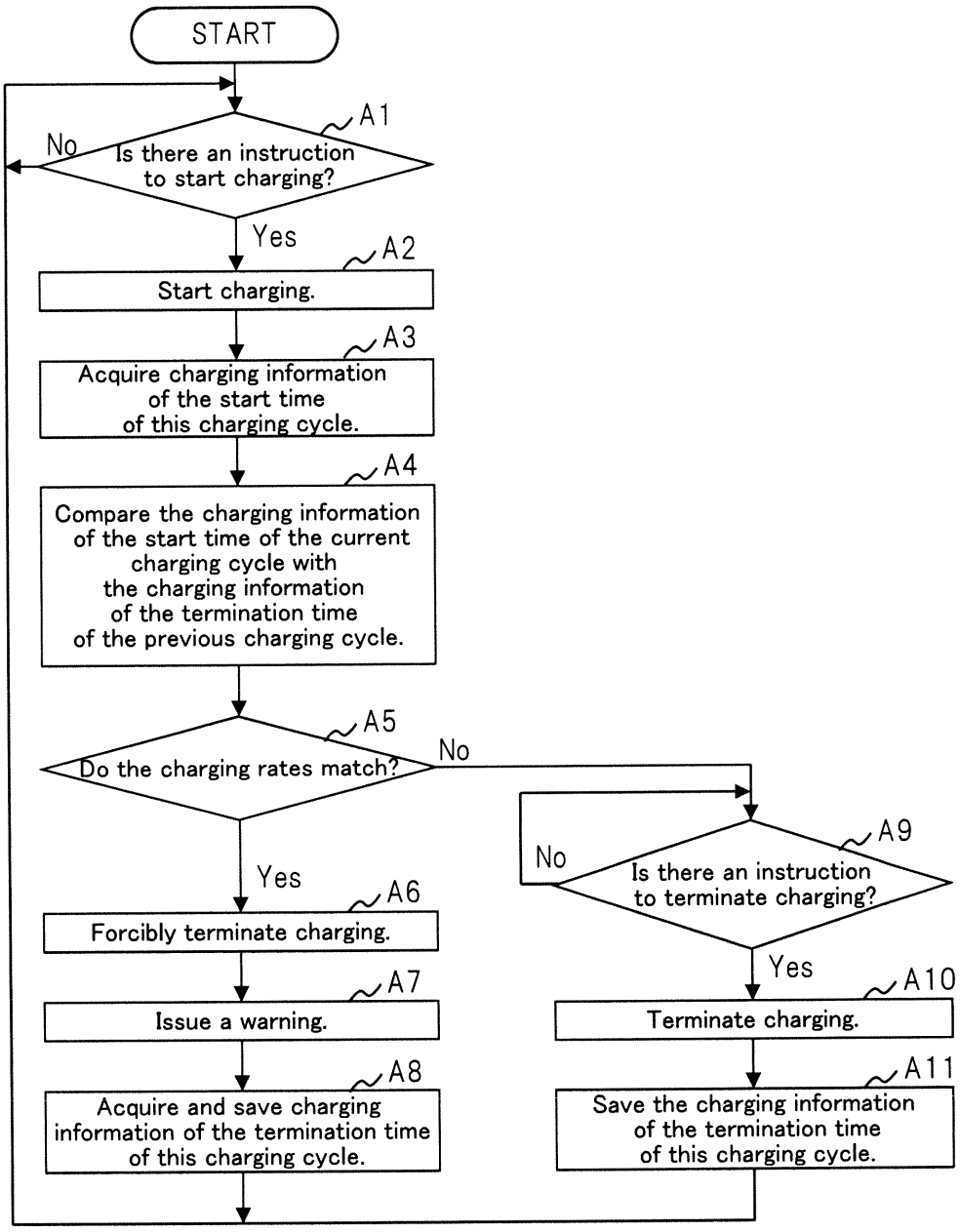
START
A1
No
Is there an instruction to start charging?
Yes
A2
Start charging.
A3
Acquire charging information of the start time of this charging cycle.
A4
Compare the charging information of the start time of the current charging cycle with the charging information of the termination time of the previous charging cycle.
A5
Do the charging rates match?
No
Yes
A6
Forcibly terminate charging.
A7
Issue a warning.
A8
Acquire and save charging information of the termination time of this charging cycle.
A9
No
Is there an instruction to terminate charging?
Yes
A10
Terminate charging.
A11
Save the charging information of the termination time of this charging cycle.

Fig.3

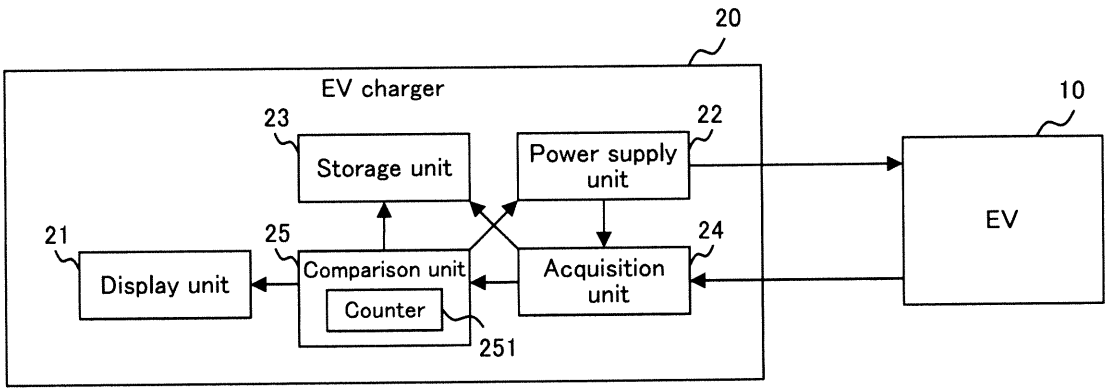
20
EV charger
23
Storage unit
22
Power supply unit
10
EV
21
Display unit
25
Comparison unit
Counter
251
24
Acquisition unit

Fig.4

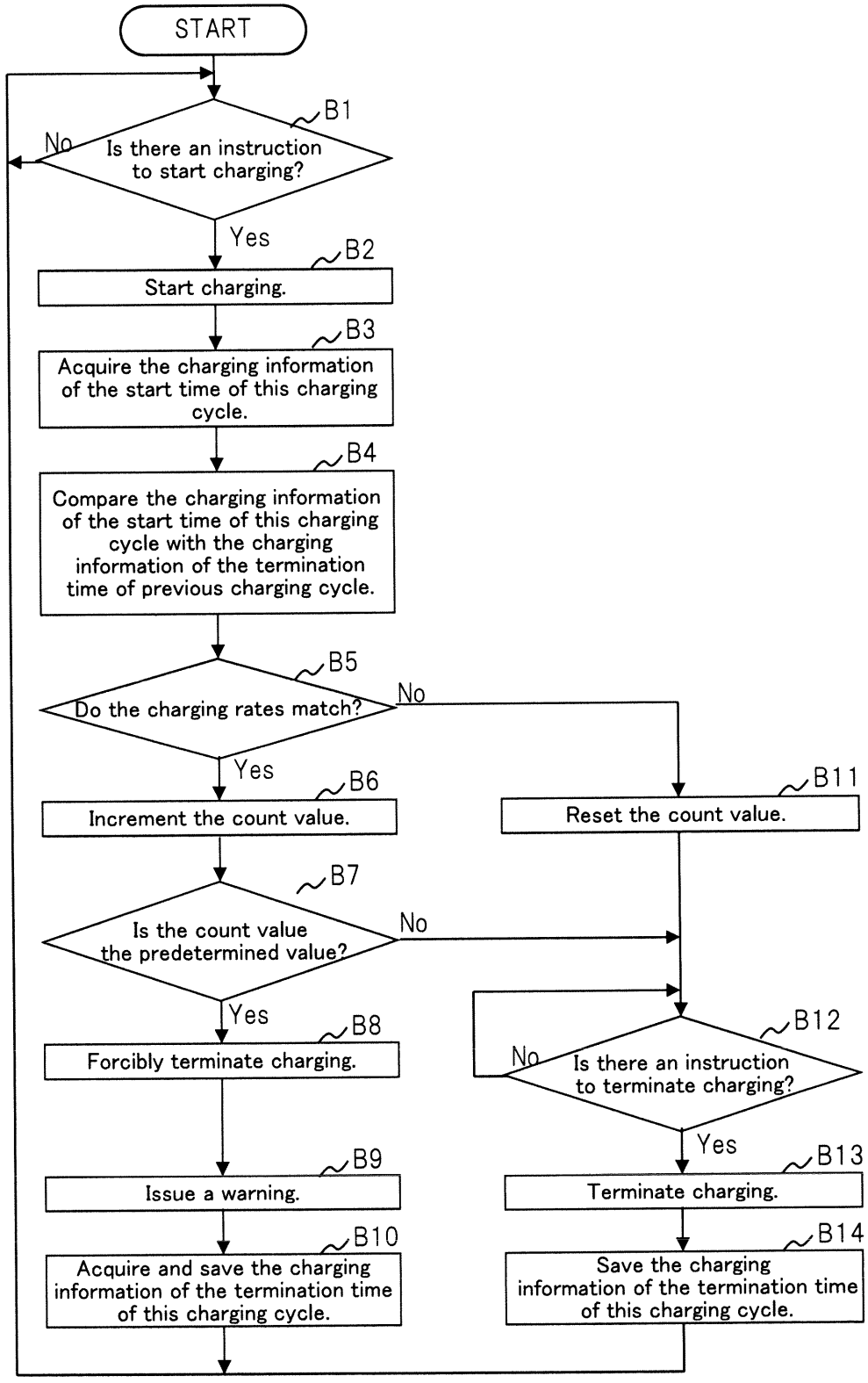
START
B1
Is there an instruction to start charging?
No
Yes
B2
Start charging.
B3
Acquire the charging information of the start time of this charging cycle.
B4
Compare the charging information of the start time of this charging cycle with the charging information of the termination time of previous charging cycle.
B5
Do the charging rates match?
No
Yes
B6
Increment the count value.
B11
Reset the count value.
B7
Is the count value the predetermined value?
No
Yes
B8
Forcibly terminate charging.
B12
No
Is there an instruction to terminate charging?
Yes
B9
Issue a warning.
B13
Terminate charging.
B10
Acquire and save the charging information of the termination time of this charging cycle.
B14
Save the charging information of the termination time of this charging cycle.

Fig.5

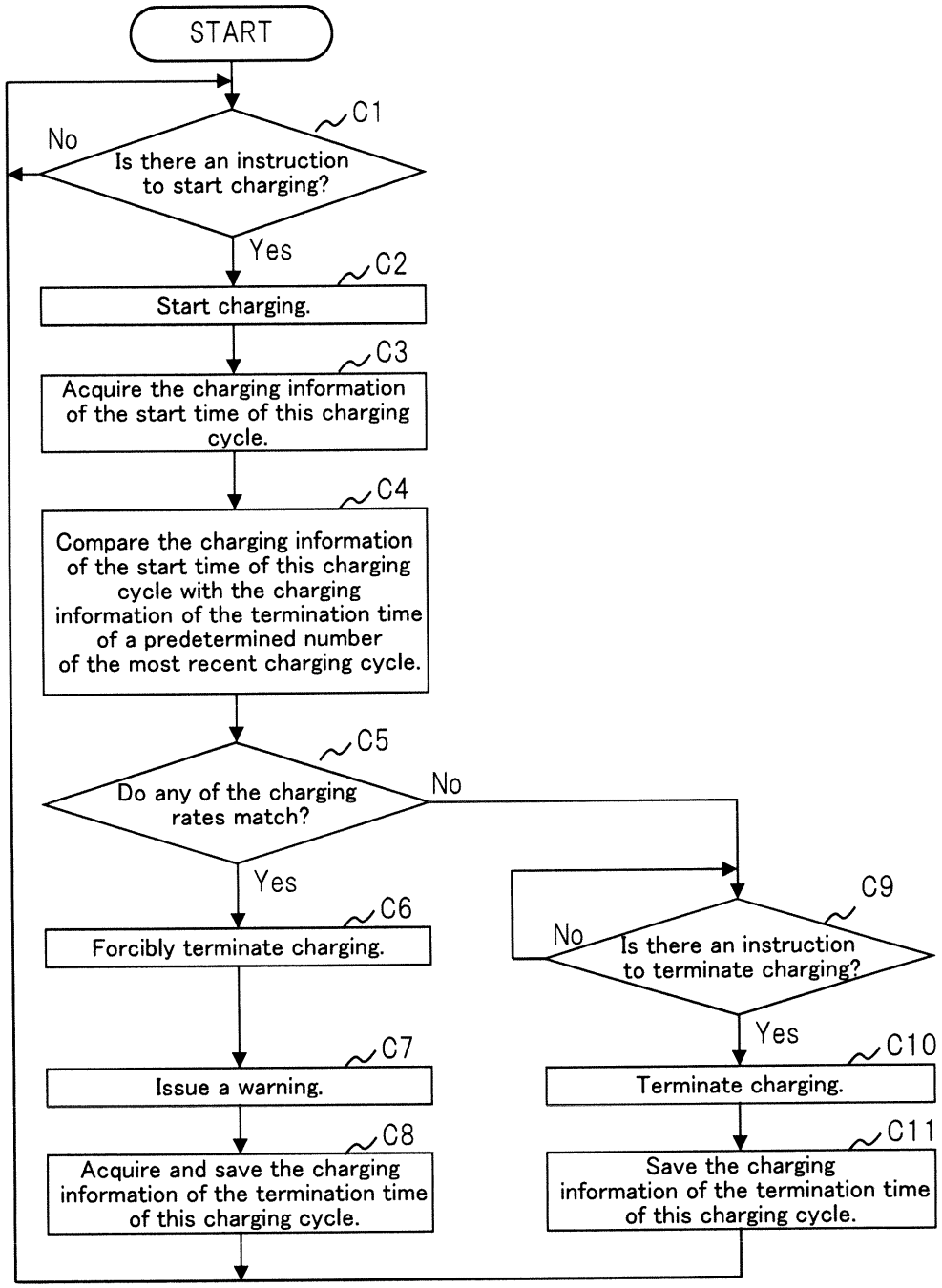
START
C1
No
Is there an instruction to start charging?
Yes
C2
Start charging.
C3
Acquire the charging information of the start time of this charging cycle.
C4
Compare the charging information of the start time of this charging cycle with the charging information of the termination time of a predetermined number of the most recent charging cycle.
C5
Do any of the charging rates match?
No
Yes
C6
Forcibly terminate charging.
C7
Issue a warning.
C8
Acquire and save the charging information of the termination time of this charging cycle.
C9
No
Is there an instruction to terminate charging?
Yes
C10
Terminate charging.
C11
Save the charging information of the termination time of this charging cycle.

Fig.6

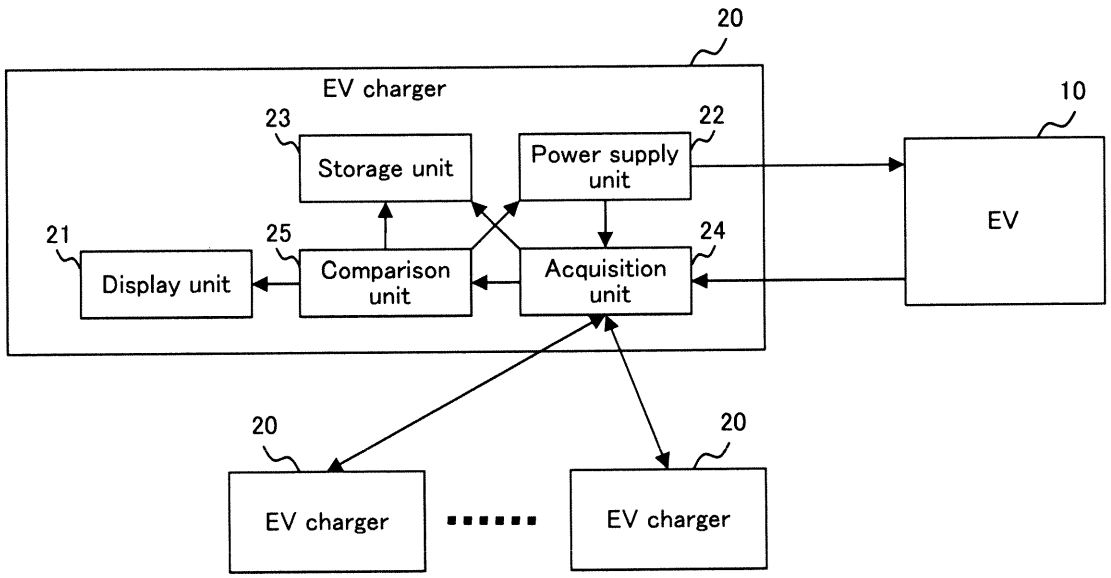
20
EV charger
23
Storage unit
22
Power supply unit
10
EV
21
Display unit
25
Comparison unit
24
Acquisition unit
20
EV charger
20
EV charger

Fig.7

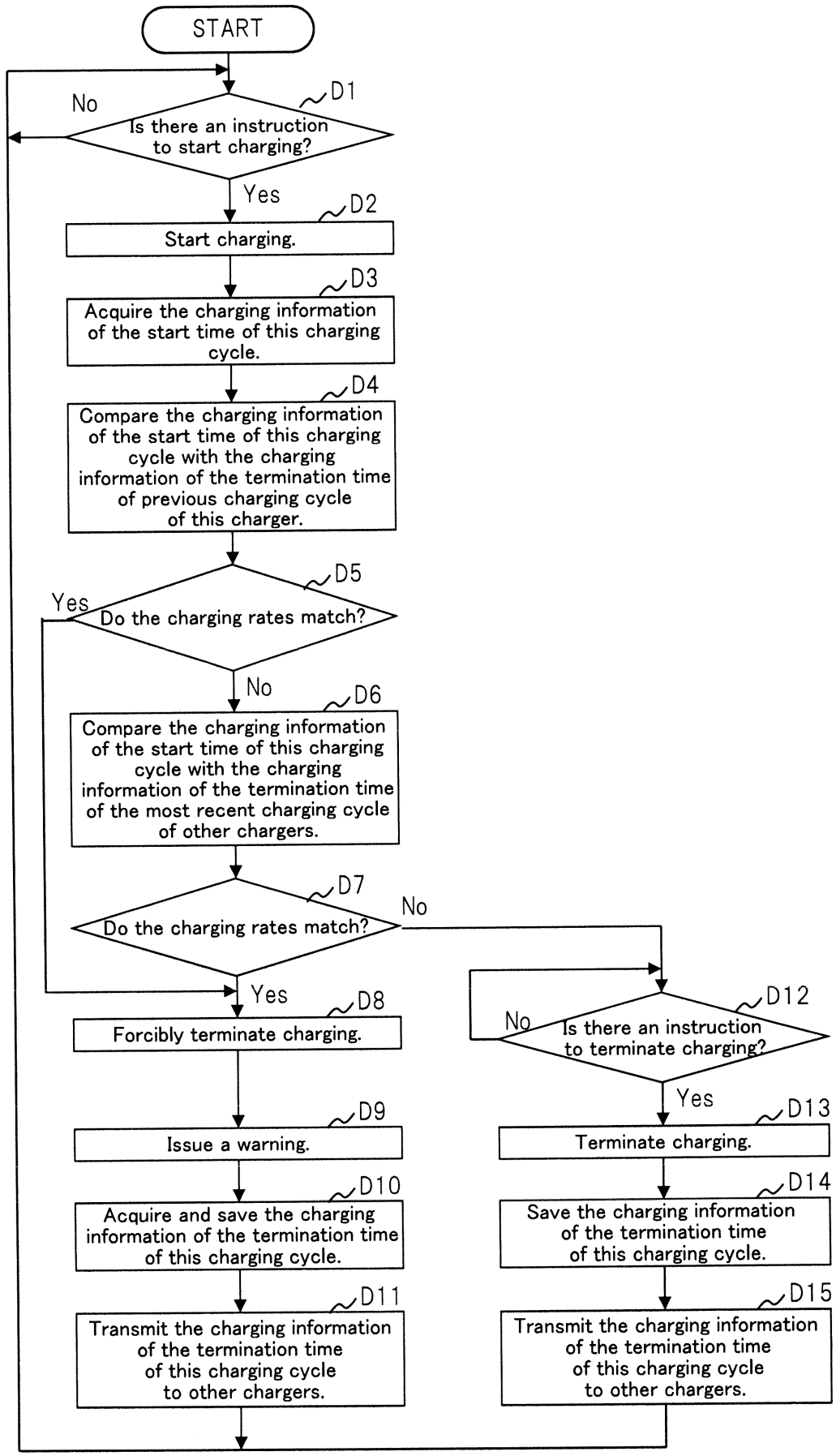
START
D1
No
Is there an instruction to start charging?
Yes
D2
Start charging.
D3
Acquire the charging information of the start time of this charging cycle.
D4
Compare the charging information of the start time of this charging cycle with the charging information of the termination time of previous charging cycle of this charger.
D5
Yes
Do the charging rates match?
No
D6
Compare the charging information of the start time of this charging cycle with the charging information of the termination time of the most recent charging cycle of other chargers.
D7
Do the charging rates match?
No
Yes
D8
Forcibly terminate charging.
D9
Issue a warning.
D10
Acquire and save the charging information of the termination time of this charging cycle.
D11
Transmit the charging information of the termination time of this charging cycle to other chargers.
D12
No
Is there an instruction to terminate charging?
Yes
D13
Terminate charging.
D14
Save the charging information of the termination time of this charging cycle.
D15
Transmit the charging information of the termination time of this charging cycle to other chargers.

Fig.8

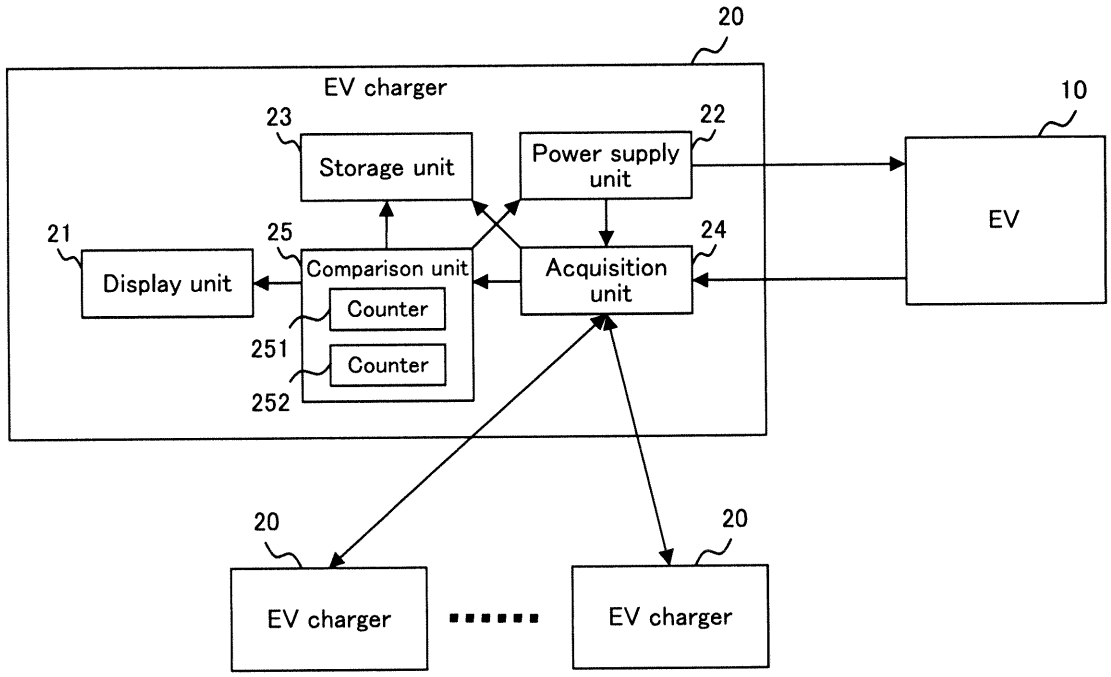
20
EV charger
23
Storage unit
22
Power supply unit
10
EV
21
Display unit
25
Comparison unit
24
Acquisition unit
Counter
251
Counter
252
20
EV charger
20
EV charger

Fig.9

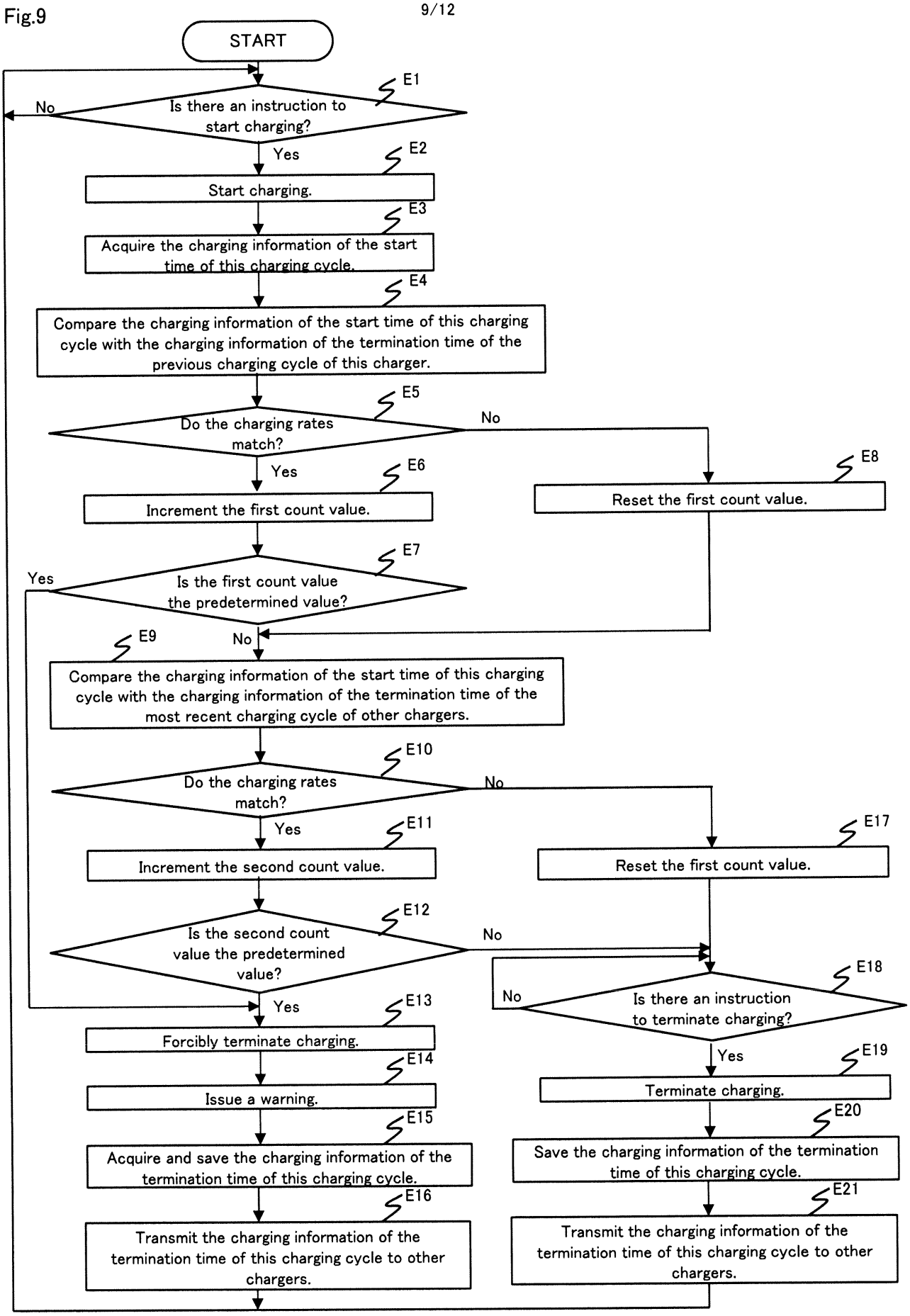
START
E1
Is there an instruction to start charging?
No
Yes
E2
Start charging.
E3
Acquire the charging information of the start time of this charging cycle.
E4
Compare the charging information of the start time of this charging cycle with the charging information of the termination time of the previous charging cycle of this charger.
E5
Do the charging rates match?
No
Yes
E6
Increment the first count value.
E8
Reset the first count value.
E7
Is the first count value the predetermined value?
Yes
No
E9
Compare the charging information of the start time of this charging cycle with the charging information of the termination time of the most recent charging cycle of other chargers.
E10
Do the charging rates match?
No
Yes
E11
Increment the second count value.
E17
Reset the first count value.
E12
Is the second count value the predetermined value?
No
Yes
E18
No
Is there an instruction to terminate charging?
Yes
E13
Forcibly terminate charging.
E19
Terminate charging.
E14
Issue a warning.
E15
Acquire and save the charging information of the termination time of this charging cycle.
E20
Save the charging information of the termination time of this charging cycle.
E16
Transmit the charging information of the termination time of this charging cycle to other chargers.
E21
Transmit the charging information of the termination time of this charging cycle to other chargers.

Fig.10

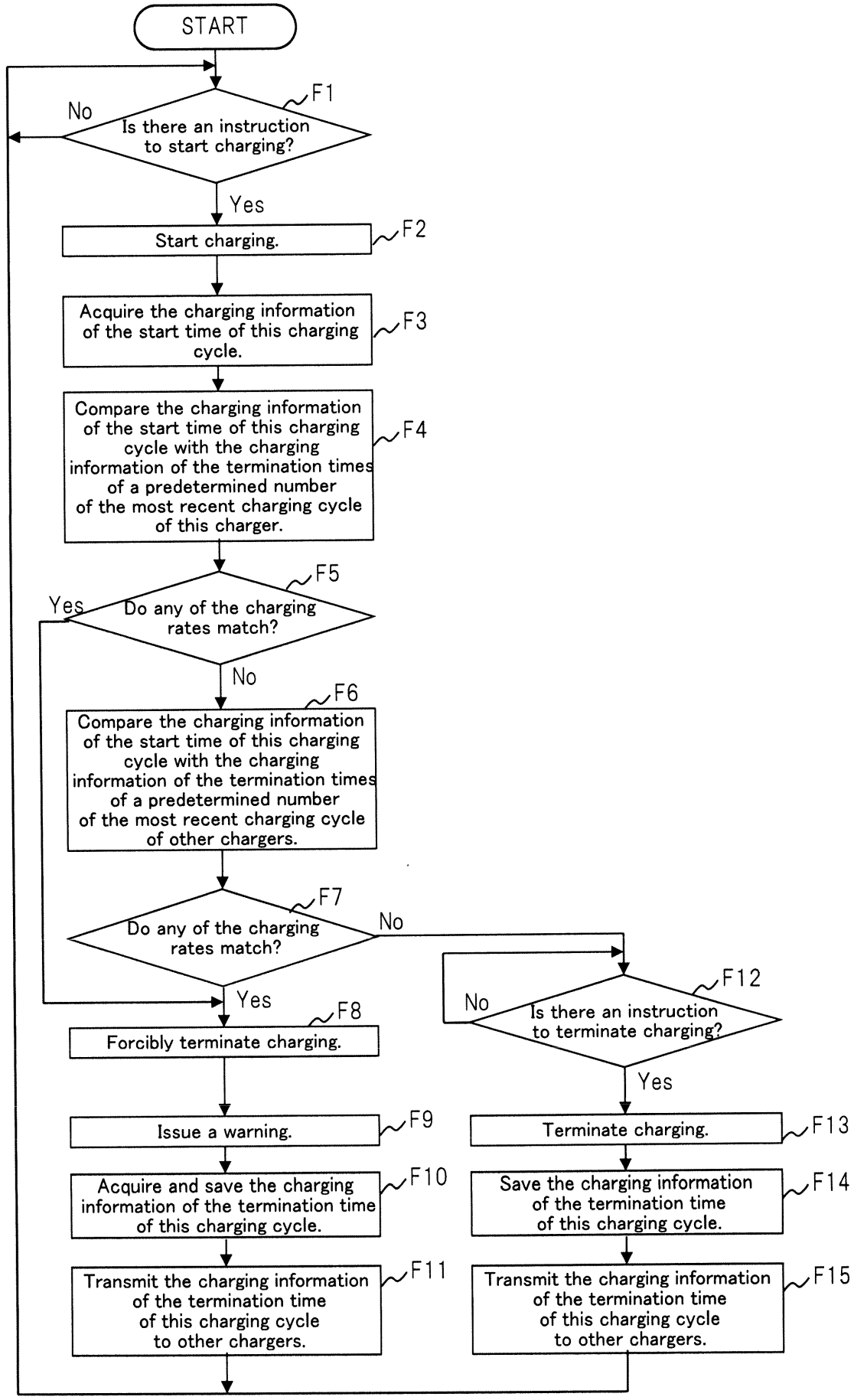
START
F1
No
Is there an instruction to start charging?
Yes
Start charging.
F2
Acquire the charging information of the start time of this charging cycle.
F3
Compare the charging information of the start time of this charging cycle with the charging information of the termination times of a predetermined number of the most recent charging cycle of this charger.
F4
F5
Yes
Do any of the charging rates match?
No
F6
Compare the charging information of the start time of this charging cycle with the charging information of the termination times of a predetermined number of the most recent charging cycle of other chargers.
F7
Do any of the charging rates match?
No
Yes
F8
Forcibly terminate charging.
F12
No
Is there an instruction to terminate charging?
Yes
Issue a warning.
F9
Terminate charging.
F13
Acquire and save the charging information of the termination time of this charging cycle.
F10
Save the charging information of the termination time of this charging cycle.
F14
Transmit the charging information of the termination time of this charging cycle to other chargers.
F11
Transmit the charging information of the termination time of this charging cycle to other chargers.
F15

Fig.11

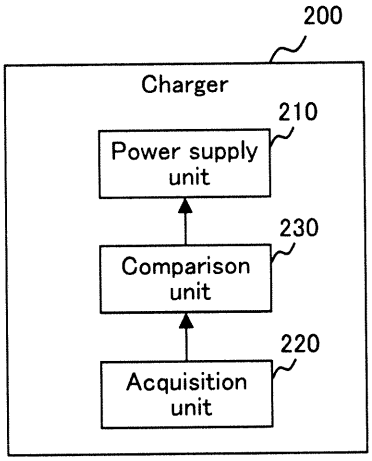
200
Charger
210
Power supply unit
230
Comparison unit
220
Acquisition unit

Fig.12

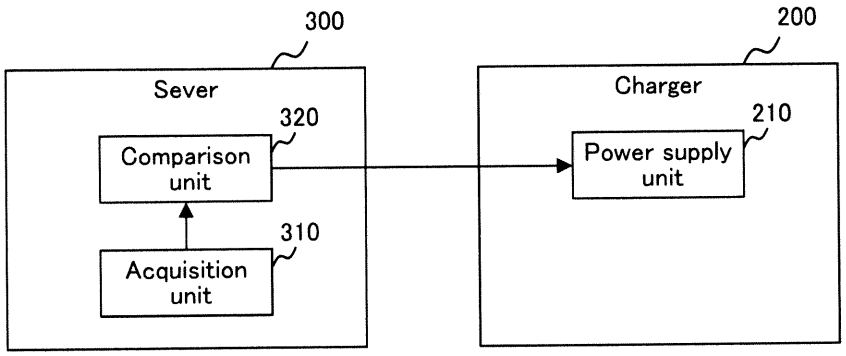
300
Sever
320
Comparison unit
310
Acquisition unit
200
Charger
210
Power supply unit