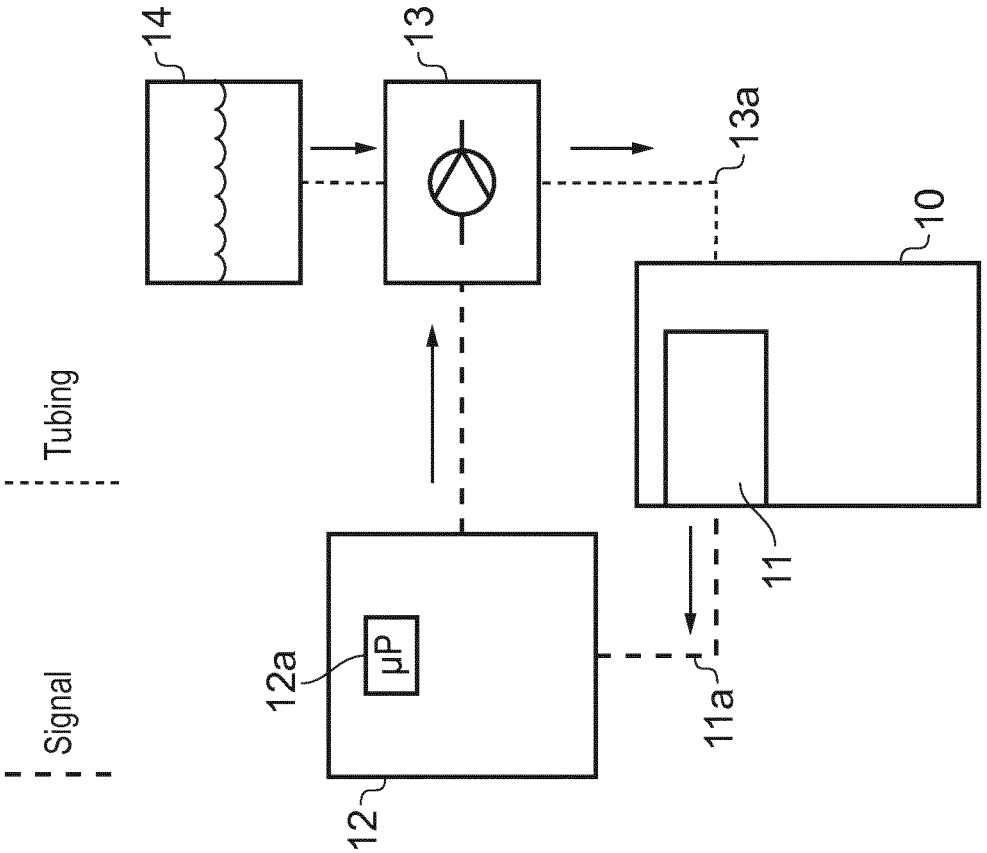

FIG. 1

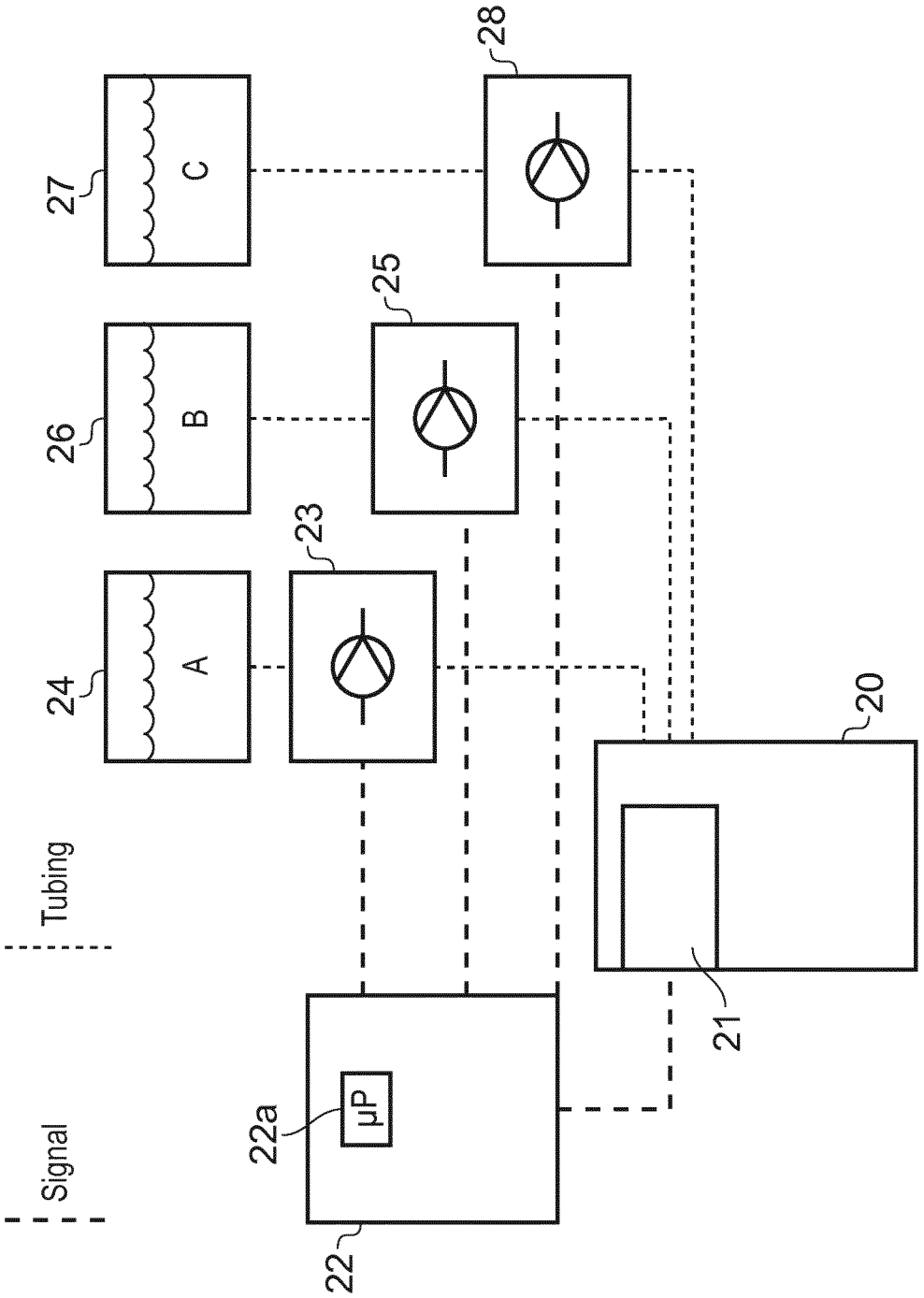

FIG. 2

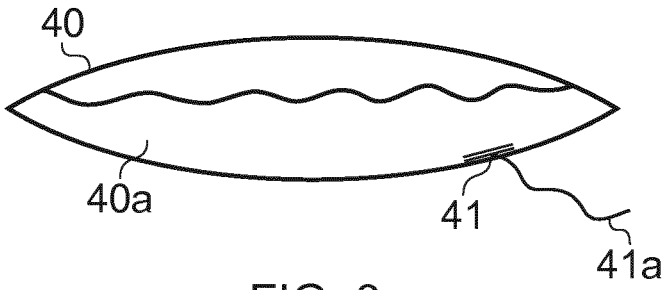

FIG. 3

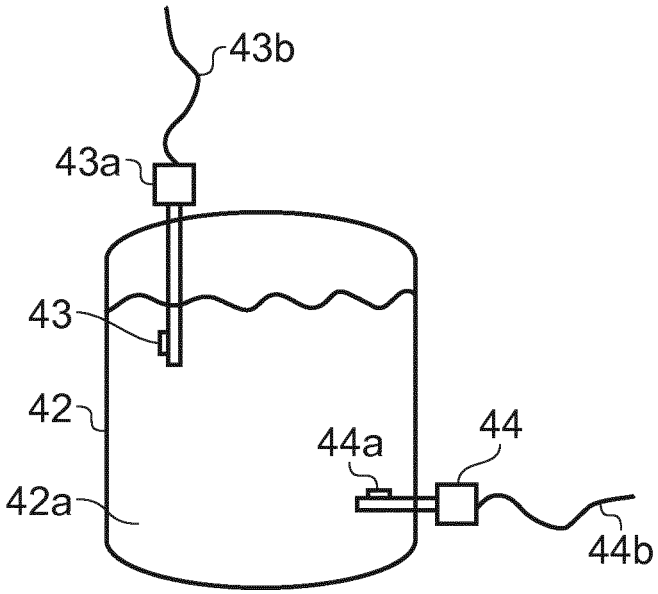

FIG. 4

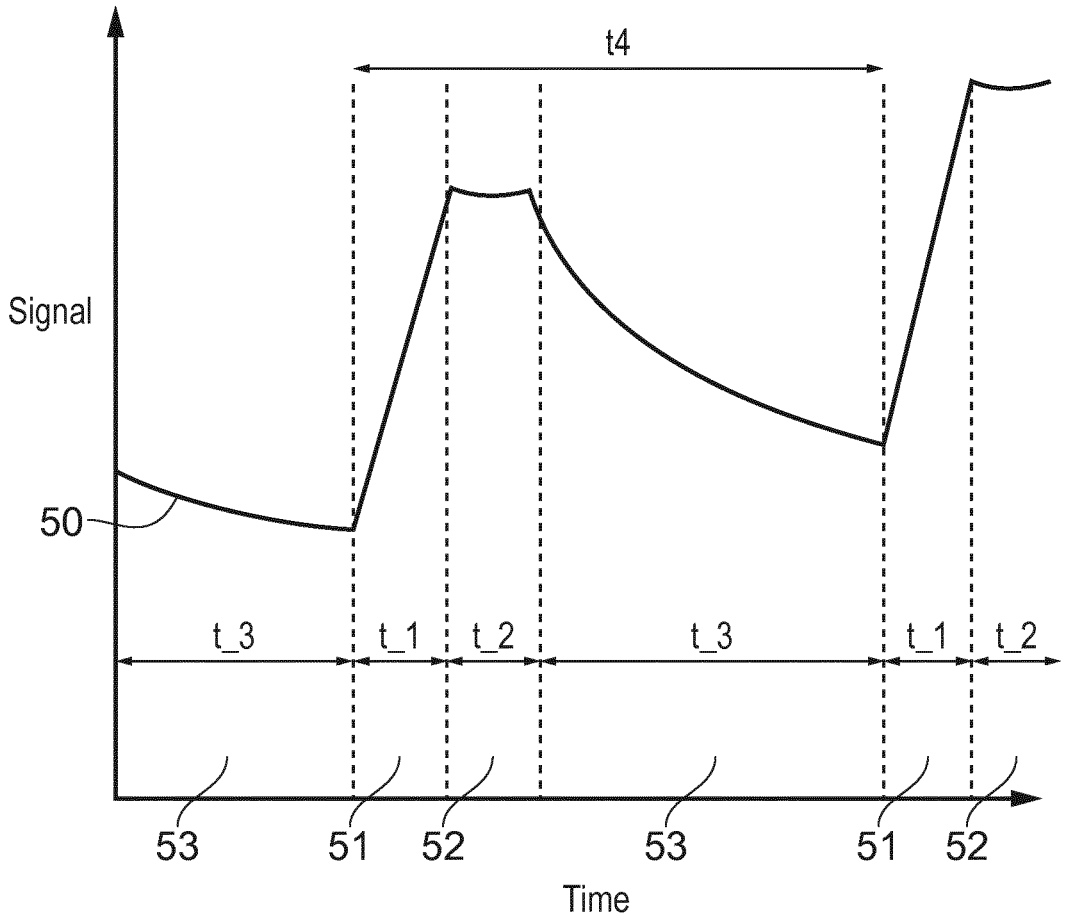

FIG. 5

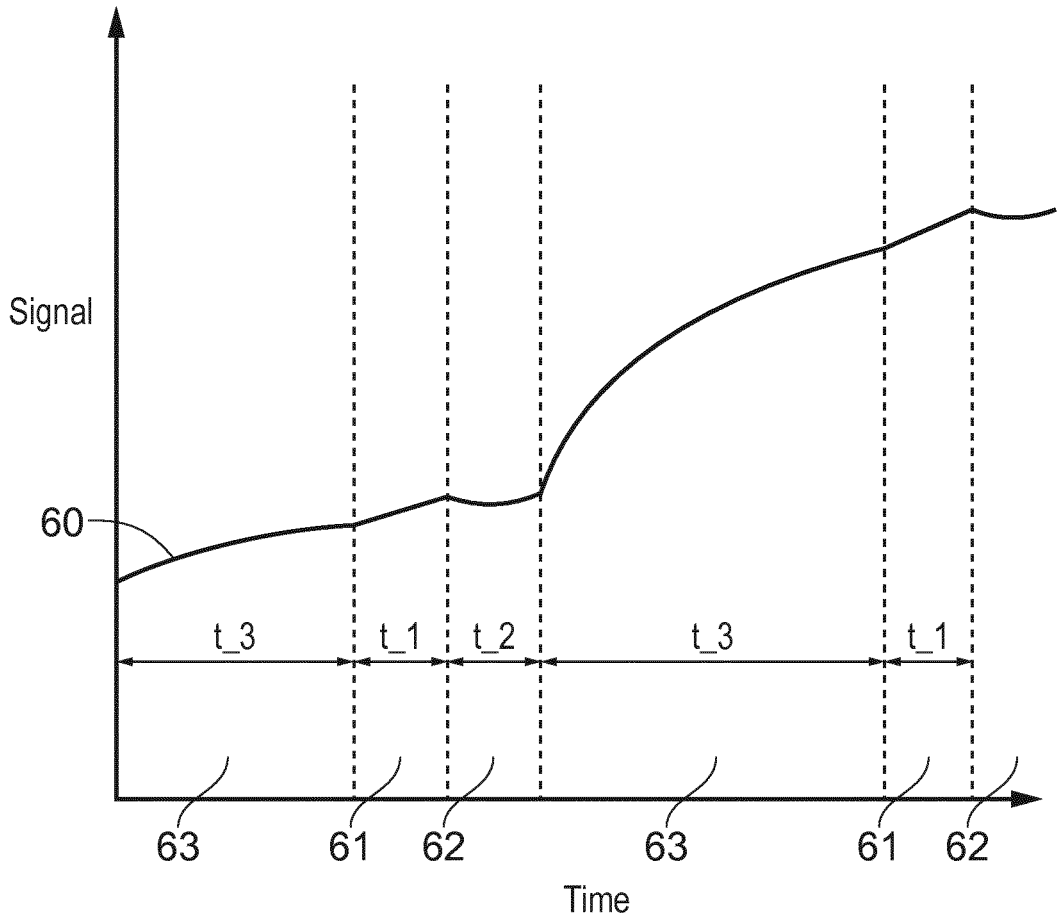

FIG. 6

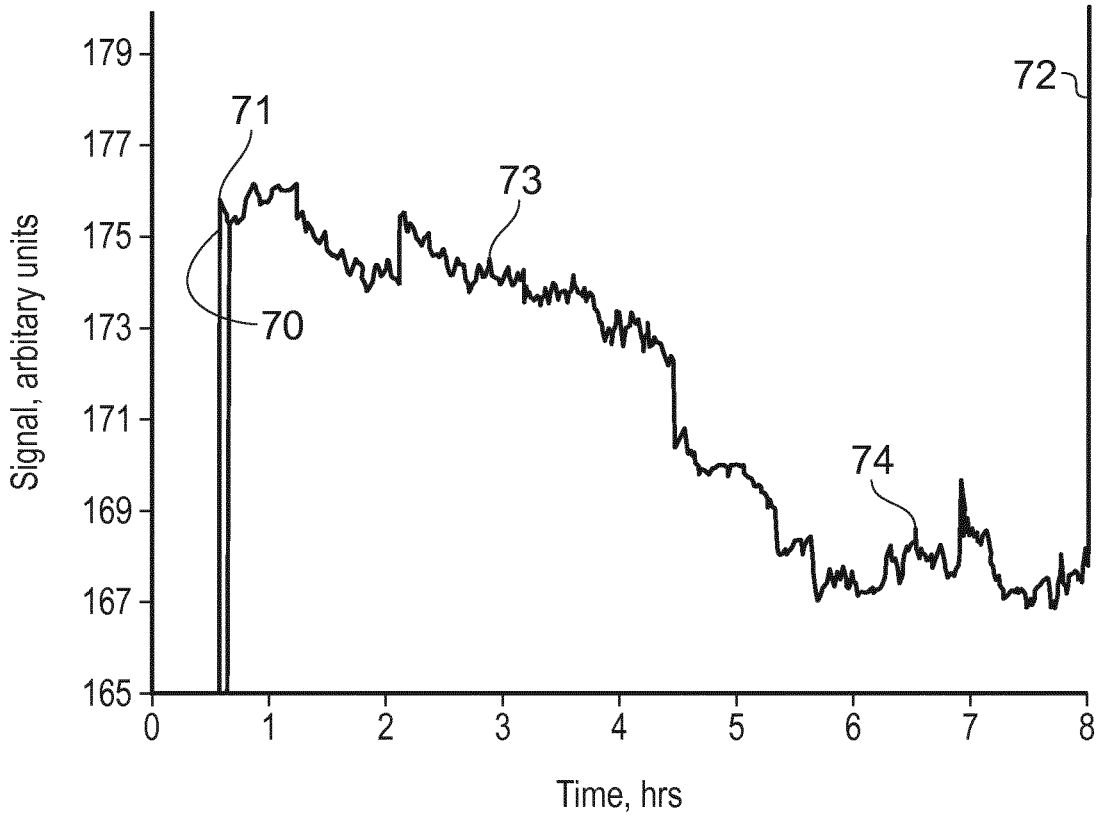
179
177
175
173
171
169
167
165
Signal, arbitary units
0
1
2
3
4
5
6
7
8
Time, hrs
70
71
72
73
74

FIG. 7

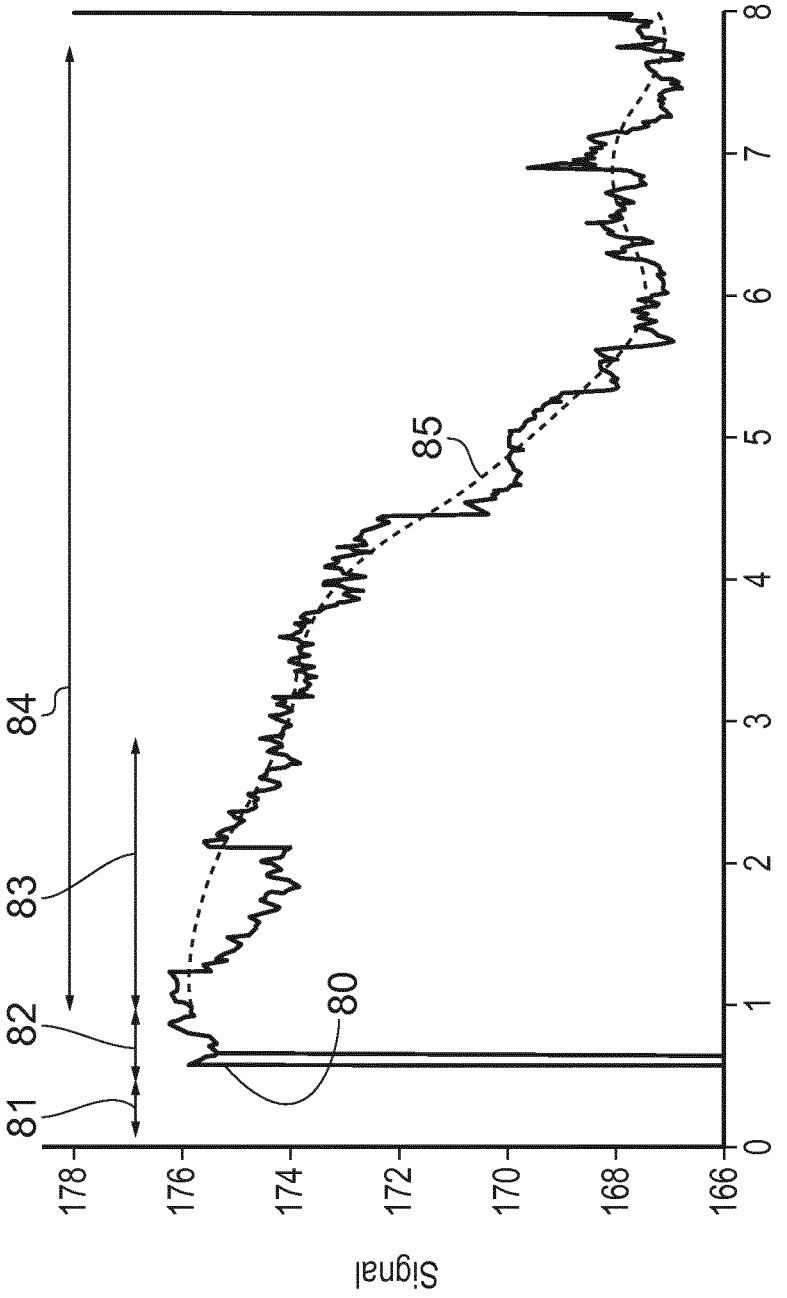
Signal
178
176
174
172
170
168
166
Time, hrs
0
1
2
3
4
5
6
7
8
80
81
82
83
84
85

FIG. 8

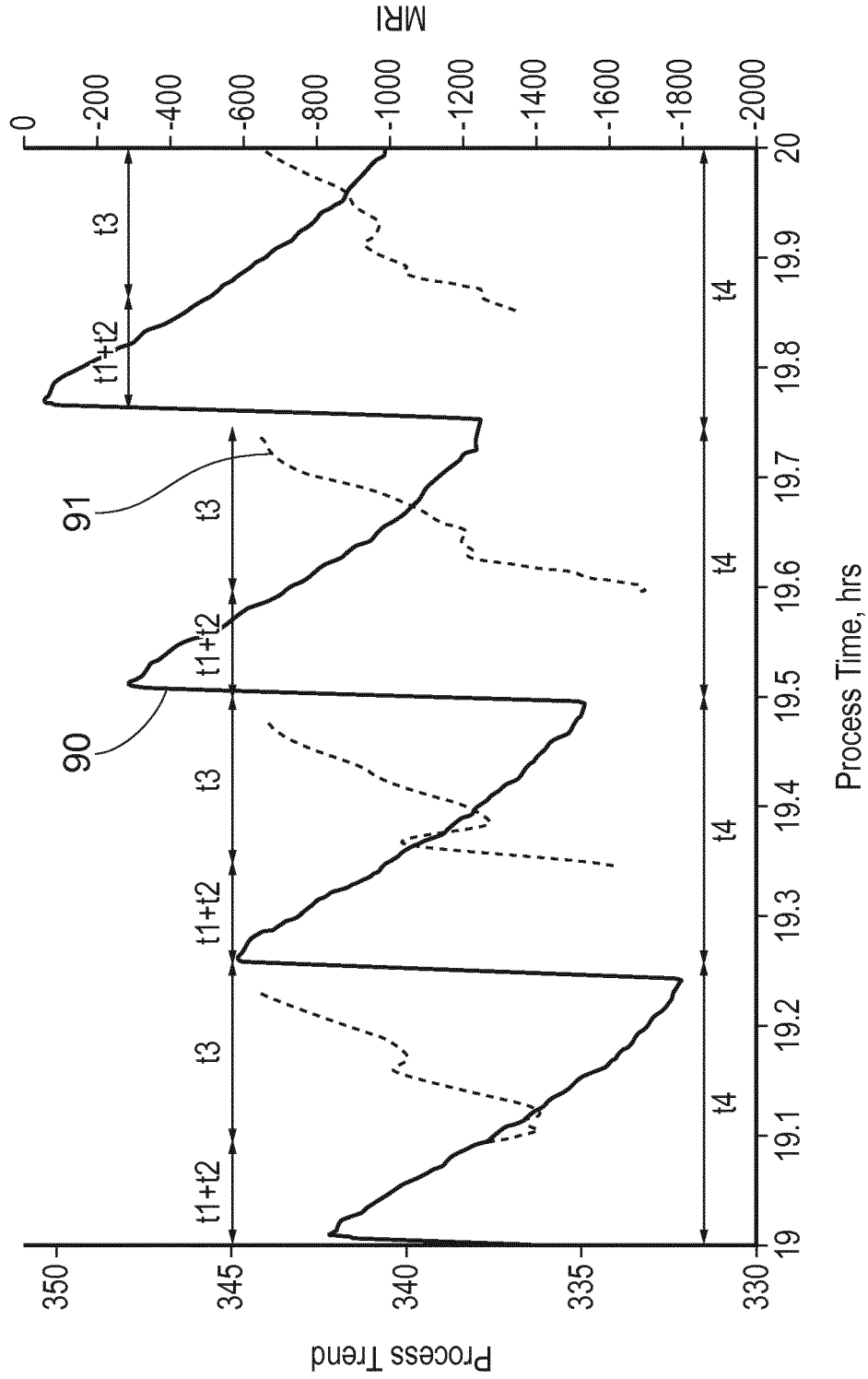
MRI
0
-200
-400
-600
-800
-1000
-1200
-1400
-1600
-1800
-2000
20
19.9
19.8
19.7
19.6
19.5
19.4
19.3
19.2
19.1
19
Process Time, hrs
Process Trend
350
345
340
335
330
t1+t2
t3
t4
90
91

FIG. 9

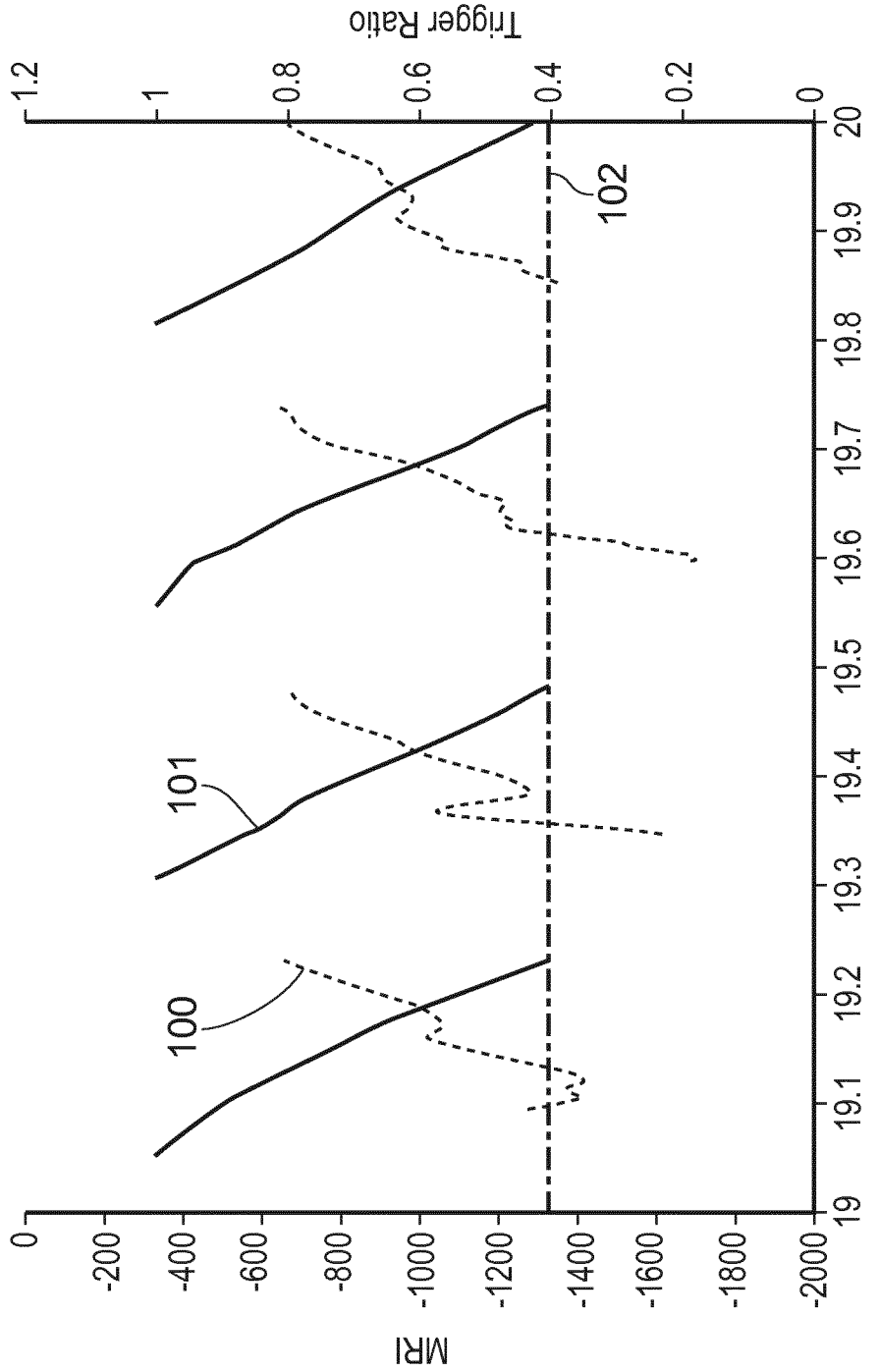
Trigger Ratio
1.2
1
0.8
0.6
0.4
0.2
0
102
101
100
MRI
0
-200
-400
-600
-800
-1000
-1200
-1400
-1600
-1800
-2000
19
19.1
19.2
19.3
19.4
19.5
19.6
19.7
19.8
19.9
20
Process Time, hrs

FIG. 10

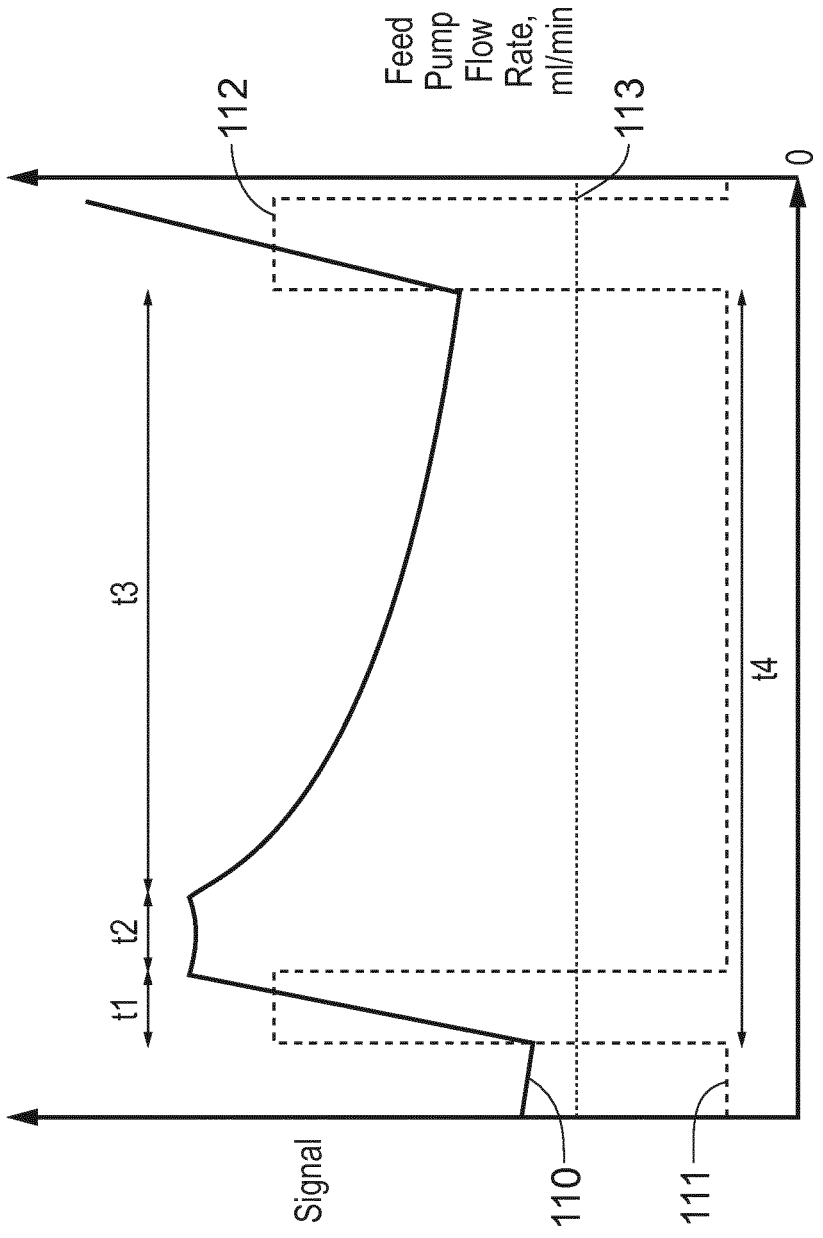
Feed Pump Flow Rate, ml/min
112
113
0
t3
t4
t2
t1
Time
Signal
110
111

FIG. 11

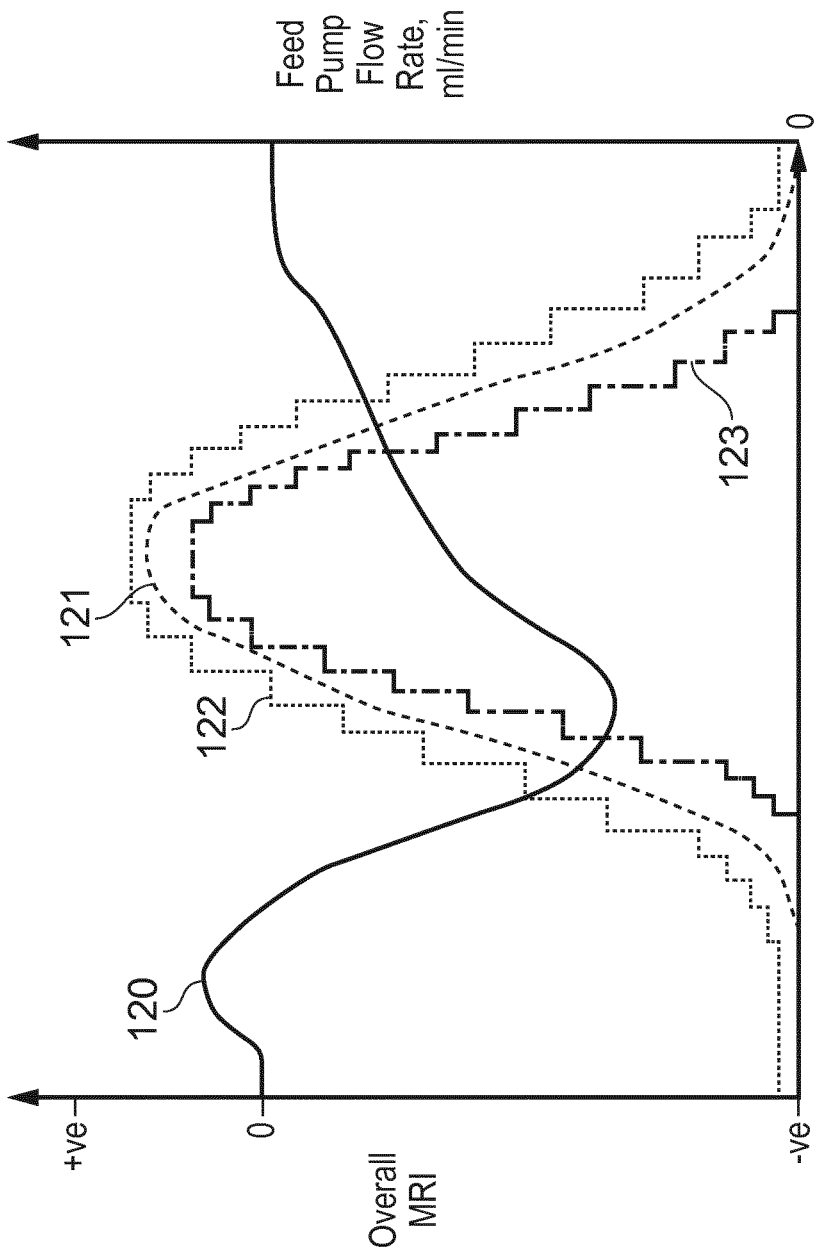
Feed Pump Flow Rate, ml/min
0
120
121
122
123
+ve
0
-ve
Overall MRI
Time

FIG. 12

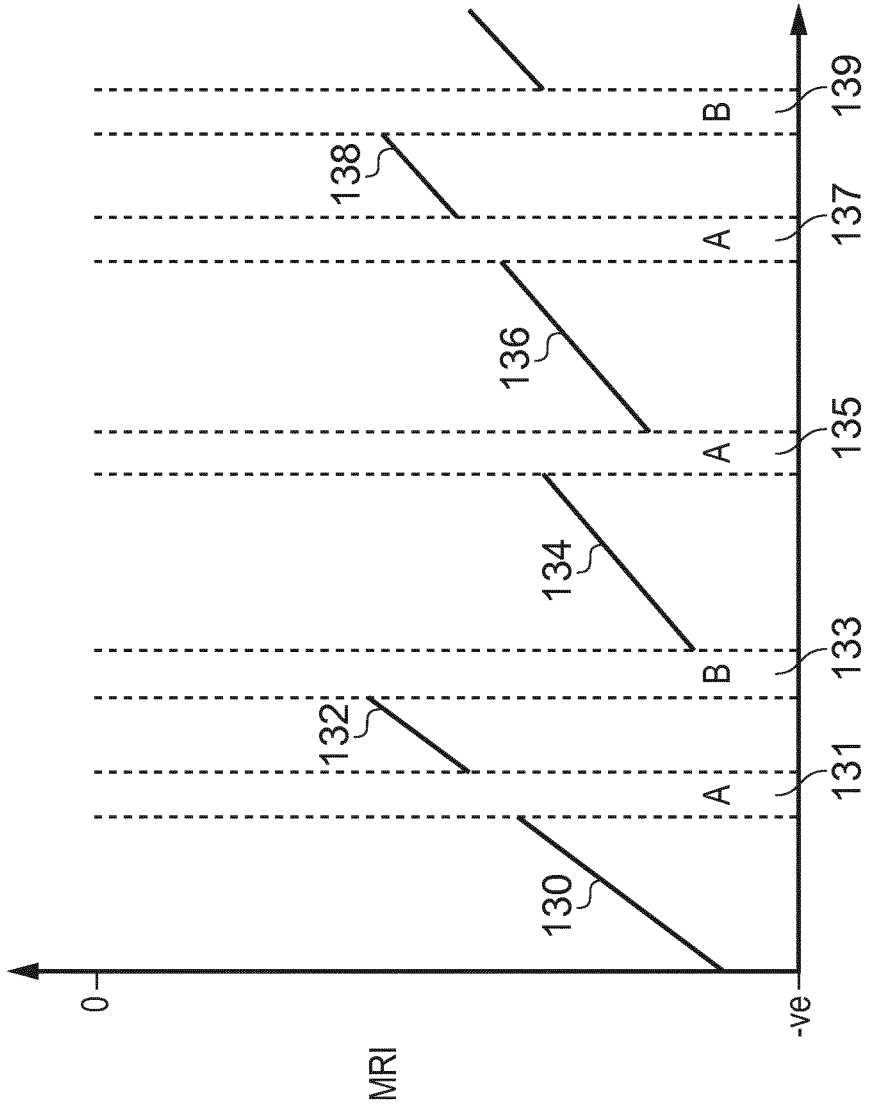

FIG. 13