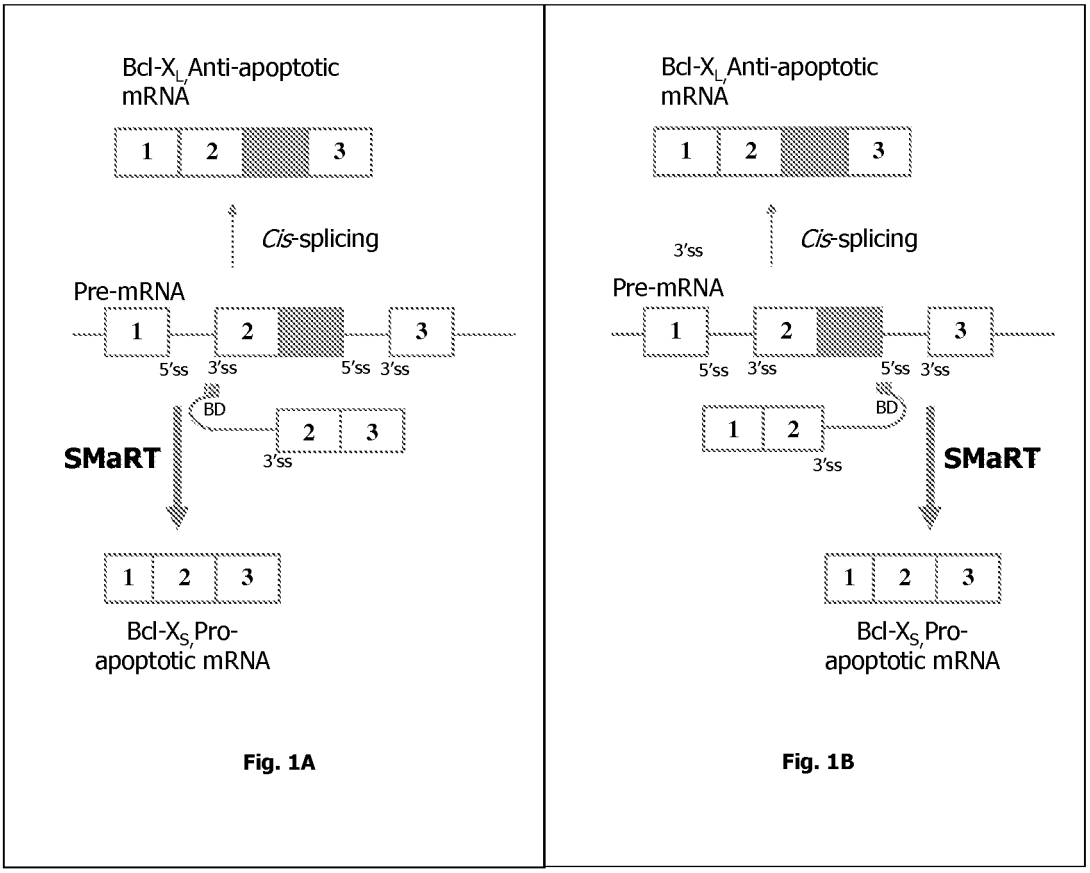
Bcl-X$_L$, Anti-apoptotic mRNA
1 2 3
Cis-splicing
Pre-mRNA
1 2 3
5'ss 3'ss 5'ss 3'ss
BD
2 3
3'ss
SMaRT
1 2 3
Bcl-X$_S$, Pro-apoptotic mRNA
Fig. 1A
Bcl-X$_L$, Anti-apoptotic mRNA
1 2 3
3'ss
Cis-splicing
Pre-mRNA
1 2 3
5'ss 3'ss 5'ss 3'ss
BD
1 2
3'ss
SMaRT
1 2 3
Bcl-X$_S$, Pro-apoptotic mRNA
Fig. 1B

FIGURE 1

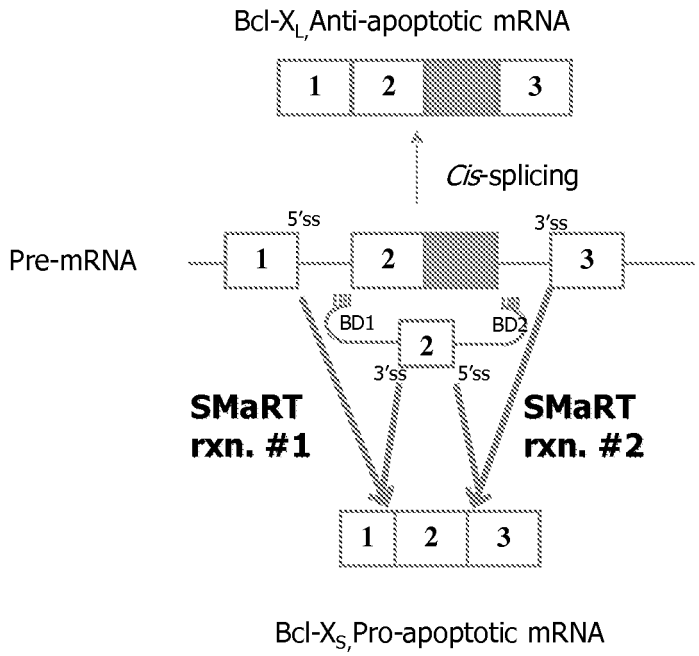

Fig. 1C

FIGURE 1 (Cont.)

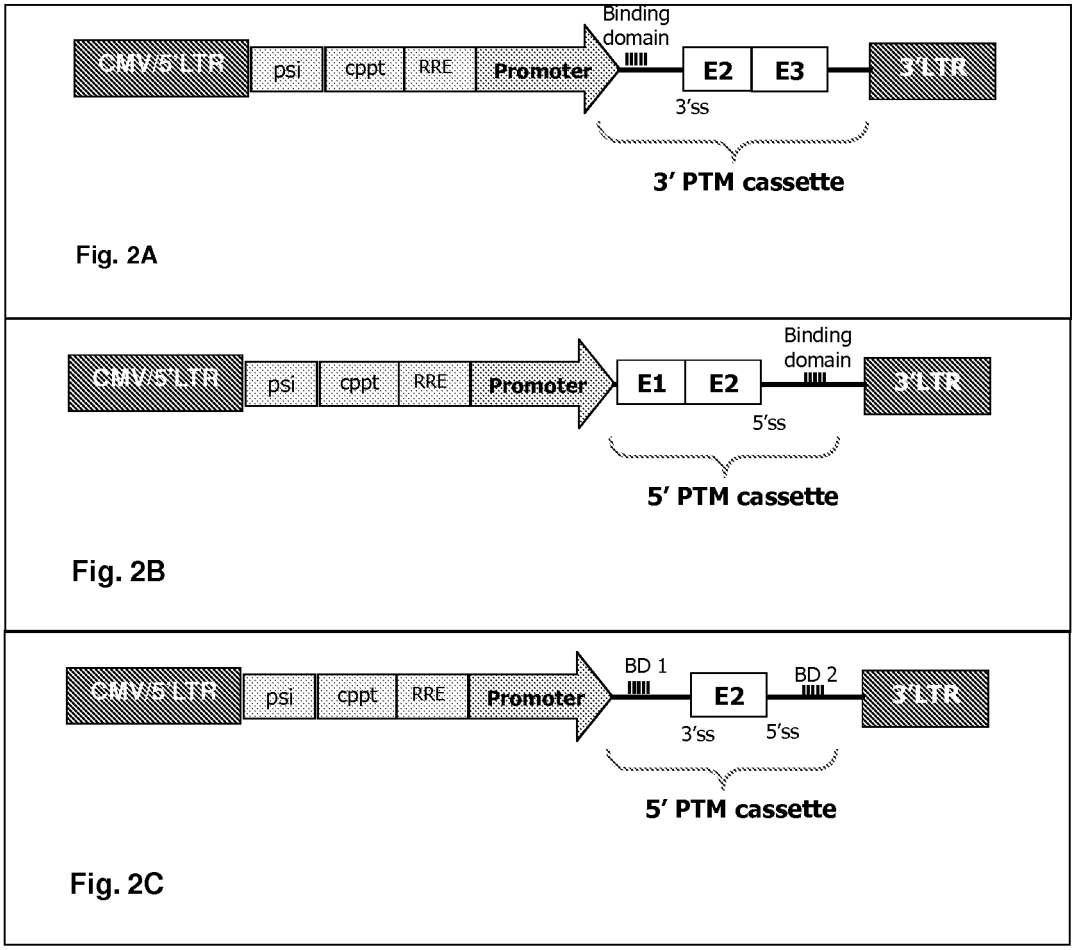
CMV/5'LTR
psi
cppt
RRE
Promoter
Binding domain
E2
E3
3'LTR
3'ss
3' PTM cassette
Fig. 2A
CMV/5'LTR
psi
cppt
RRE
Promoter
E1
E2
Binding domain
3'LTR
5'ss
5' PTM cassette
Fig. 2B
CMV/5'LTR
psi
cppt
RRE
Promoter
BD 1
E2
BD 2
3'LTR
3'ss
5'ss
5' PTM cassette
Fig. 2C

FIGURE 2

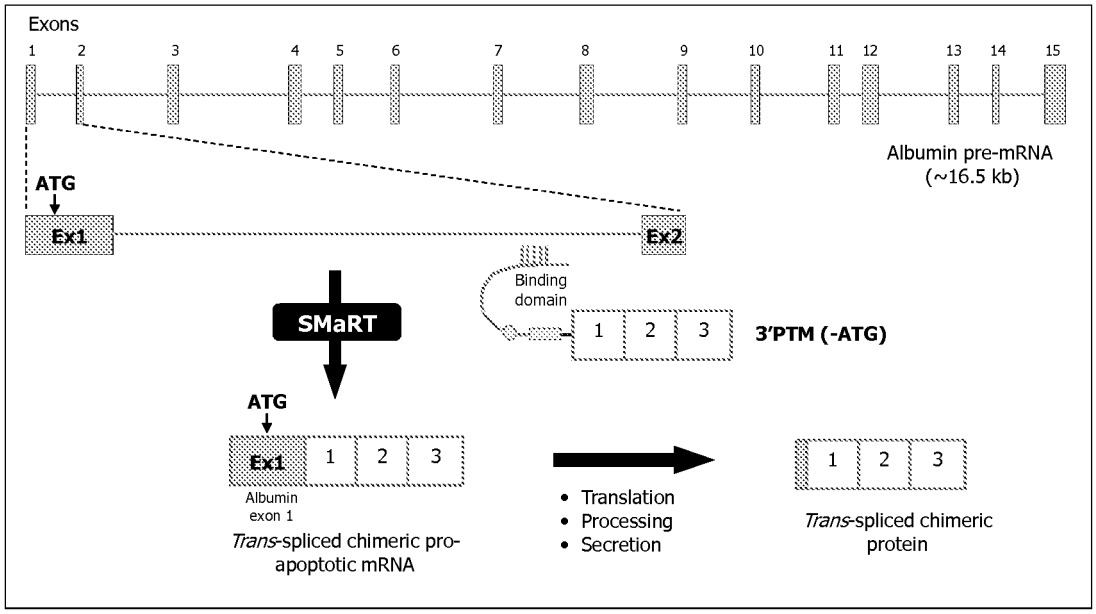
Exons
1 2 3 4 5 6 7 8 9 10 11 12 13 14 15
Albumin pre-mRNA
(~16.5 kb)
ATG
Ex1
Ex2
Binding
domain
1 2 3
3'PTM (-ATG)
SMaRT
ATG
Ex1 1 2 3
Albumin
exon 1
Trans-spliced chimeric pro-
apoptotic mRNA
• Translation
• Processing
• Secretion
1 2 3
Trans-spliced chimeric
protein

FIGURE 3