(12) INTERNATIONAL APPLICATION PUBLISHED UNDER THE PATENT COOPERATION TREATY (PCT)

(19) World Intellectual Property Organization
International Bureau

(43) International Publication Date
21 August 2008 (21.08.2008)

PCT

(10) International Publication Number
WO 2008/100603 A1

(51) International Patent Classification:
H01L 31/0352 (2006.01) *H01L 31/00* (2006.01)

(21) International Application Number:
PCT/US2008/002058

(22) International Filing Date:
15 February 2008 (15.02.2008)

(25) Filing Language: English

(26) Publication Language: English

(30) Priority Data:
60/901,511 15 February 2007 (15.02.2007) US
61/011,933 23 January 2008 (23.01.2008) US

(71) Applicant *(for all designated States except US)*: **MASSACHUSETTS INSTITUTE OF TECHNOLOGY** [US/US]; 77 Massachusetts Avenue, Room NE 25-230, Cambridge, MA 02139 (US).

(72) Inventors; and
(75) Inventors/Applicants *(for US only)*: **SACHS, Emanuel, M.** [US/US]; 18 Moreland Avenue, Newton, MA 02459 (US). **BREDT, James, F.** [US/US]; 73 Templeton Parkway, Watertown, MA 02472 (US).

(74) Agent: **WEISSBURG, Steven, J.**; 238 Main Street, Suite 303, Cambridge, MA 02142 (US).

(81) Designated States *(unless otherwise indicated, for every kind of national protection available)*: AE, AG, AL, AM, AO, AT, AU, AZ, BA, BB, BG, BH, BR, BW, BY, BZ, CA, CH, CN, CO, CR, CU, CZ, DE, DK, DM, DO, DZ, EC, EE, EG, ES, FI, GB, GD, GE, GH, GM, GT, HN, HR, HU, ID, IL, IN, IS, JP, KE, KG, KM, KN, KP, KR, KZ, LA, LC, LK, LR, LS, LT, LU, LY, MA, MD, ME, MG, MK, MN, MW, MX, MY, MZ, NA, NG, NI, NO, NZ, OM, PG, PH, PL, PT, RO, RS, RU, SC, SD, SE, SG, SK, SL, SM, SV, SY, TJ, TM, TN, TR, TT, TZ, UA, UG, US, UZ, VC, VN, ZA, ZM, ZW.

(84) Designated States *(unless otherwise indicated, for every kind of regional protection available)*: ARIPO (BW, GH, GM, KE, LS, MW, MZ, NA, SD, SL, SZ, TZ, UG, ZM, ZW), Eurasian (AM, AZ, BY, KG, KZ, MD, RU, TJ, TM), European (AT, BE, BG, CH, CY, CZ, DE, DK, EE, ES, FI, FR, GB, GR, HR, HU, IE, IS, IT, LT, LU, LV, MC, MT, NL, NO, PL, PT, RO, SE, SI, SK, TR), OAPI (BF, BJ, CF, CG, CI, CM, GA, GN, GQ, GW, ML, MR, NE, SN, TD, TG).

Published:
— *with international search report*

(54) Title: SOLAR CELLS WITH TEXTURED SURFACES

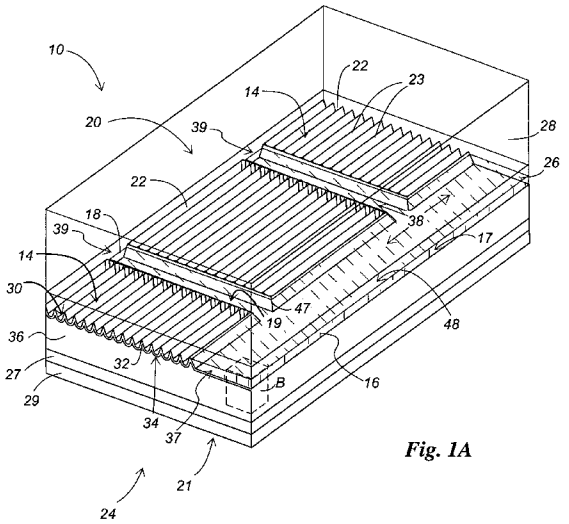

Fig. 1A

(57) Abstract: Semiconductor photovoltaic cells have surfaces that are textured for processing and photovoltaic reasons. The absorbing regions may have parallel grooves that reduce loss of solar energy that would otherwise be lost by reflection. One form of texturing has parallel grooves and ridges. The cell also includes regions of metallization for collecting the generated electrical carriers and conducting them away, which may be channels. The topography is considered during production, using a process that takes advantage of the topography to govern what locations upon will receive a specific processing, and which locations will not receive such a processing. Liquids are treated directly into zones of the cell. They migrate throughout a zone and act upon the locations contacted. They do not migrate to other zones, due to impediments to fluid flow that are features of the surface texture, such as edges, walls and ridges. Blocking liquid may also be deposited and migrate within a zone, to block or mask a subsequent activity, such as etching.

WO 2008/100603 A1