(12) INTERNATIONAL APPLICATION PUBLISHED UNDER THE PATENT COOPERATION TREATY (PCT)

(19) World Intellectual Property Organization
International Bureau

(43) International Publication Date
17 March 2022 (17.03.2022)

WIPO | PCT

(10) International Publication Number
WO 2022/053468 A1

(51) International Patent Classification:
D06F 81/00 (2006.01) *D06F 81/04* (2006.01)

(21) International Application Number:
PCT/EP2021/074617

(22) International Filing Date:
07 September 2021 (07.09.2021)

(25) Filing Language: English

(26) Publication Language: English

(30) Priority Data:
20195410.4 10 September 2020 (10.09.2020) EP

(71) Applicant: **KONINKLIJKE PHILIPS N.V.** [NL/NL]; High Tech Campus 52, 5656 AG Eindhoven (NL).

(72) Inventors: **LING, Loo, Ping**; Philips Domestic Appliances IP Department, High Tech Campus 42, 5656 AE Eindhoven (NL). **GOH, See, Chen**; Philips Domestic Appliances IP Department, High Tech Campus 42, 5656 AE Eindhoven (NL). **SUDDHAN, Easwaravadivel, Hari, Hara**; Philips Domestic Appliances IP Department, High Tech Campus 42, 5656 AE Eindhoven (NL).

(74) Agent: **KAPOOR, Pavan, Puneet**; High Tech Campus 42, 5656 AE Eindhoven (NL).

(81) Designated States *(unless otherwise indicated, for every kind of national protection available)*: AE, AG, AL, AM, AO, AT, AU, AZ, BA, BB, BG, BH, BN, BR, BW, BY, BZ, CA, CH, CL, CN, CO, CR, CU, CZ, DE, DJ, DK, DM, DO, DZ, EC, EE, EG, ES, FI, GB, GD, GE, GH, GM, GT, HN, HR, HU, ID, IL, IN, IR, IS, IT, JO, JP, KE, KG, KH, KN, KP, KR, KW, KZ, LA, LC, LK, LR, LS, LU, LY, MA, MD, ME, MG, MK, MN, MW, MX, MY, MZ, NA, NG, NI, NO, NZ, OM, PA, PE, PG, PH, PL, PT, QA, RO, RS, RU, RW, SA, SC, SD, SE, SG, SK, SL, ST, SV, SY, TH, TJ, TM, TN, TR, TT, TZ, UA, UG, US, UZ, VC, VN, WS, ZA, ZM, ZW.

(84) Designated States *(unless otherwise indicated, for every kind of regional protection available)*: ARIPO (BW, GH,

(54) Title: GARMENT STEAMER WITH IRONING BOARD

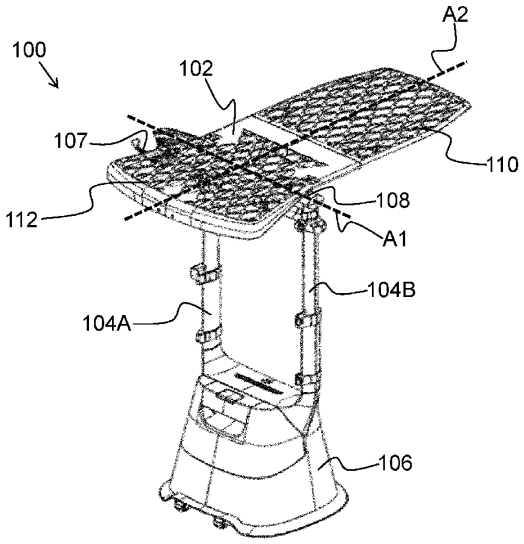

FIG. 1

(57) Abstract: The invention relates to a garment steamer (100) for treating garments. The garment steamer comprises an ironing board (102) forming a planar surface. The ironing board is made of plastic material. A pole assembly (104A, 104B) supports the ironing board via a pivot coupling (108) arranged between the ironing board and the pole assembly. The ironing board comprises a first part (110) and a second part (112) which are detachable from each other. The first part (110) and the second part (112) extend in an opposite direction relative to the pivot coupling. Reinforcement means made of metal material are only arranged on one of the first part or the second part. The reinforcement means thus reinforce the rigidity of either the first part or the second part.

WO 2022/053468 A1

[Continued on next page]

GM, KE, LR, LS, MW, MZ, NA, RW, SD, SL, ST, SZ, TZ, UG, ZM, ZW), Eurasian (AM, AZ, BY, KG, KZ, RU, TJ, TM), European (AL, AT, BE, BG, CH, CY, CZ, DE, DK, EE, ES, FI, FR, GB, GR, HR, HU, IE, IS, IT, LT, LU, LV, MC, MK, MT, NL, NO, PL, PT, RO, RS, SE, SI, SK, SM, TR), OAPI (BF, BJ, CF, CG, CI, CM, GA, GN, GQ, GW, KM, ML, MR, NE, SN, TD, TG).

Published:

— *with international search report (Art. 21(3))*