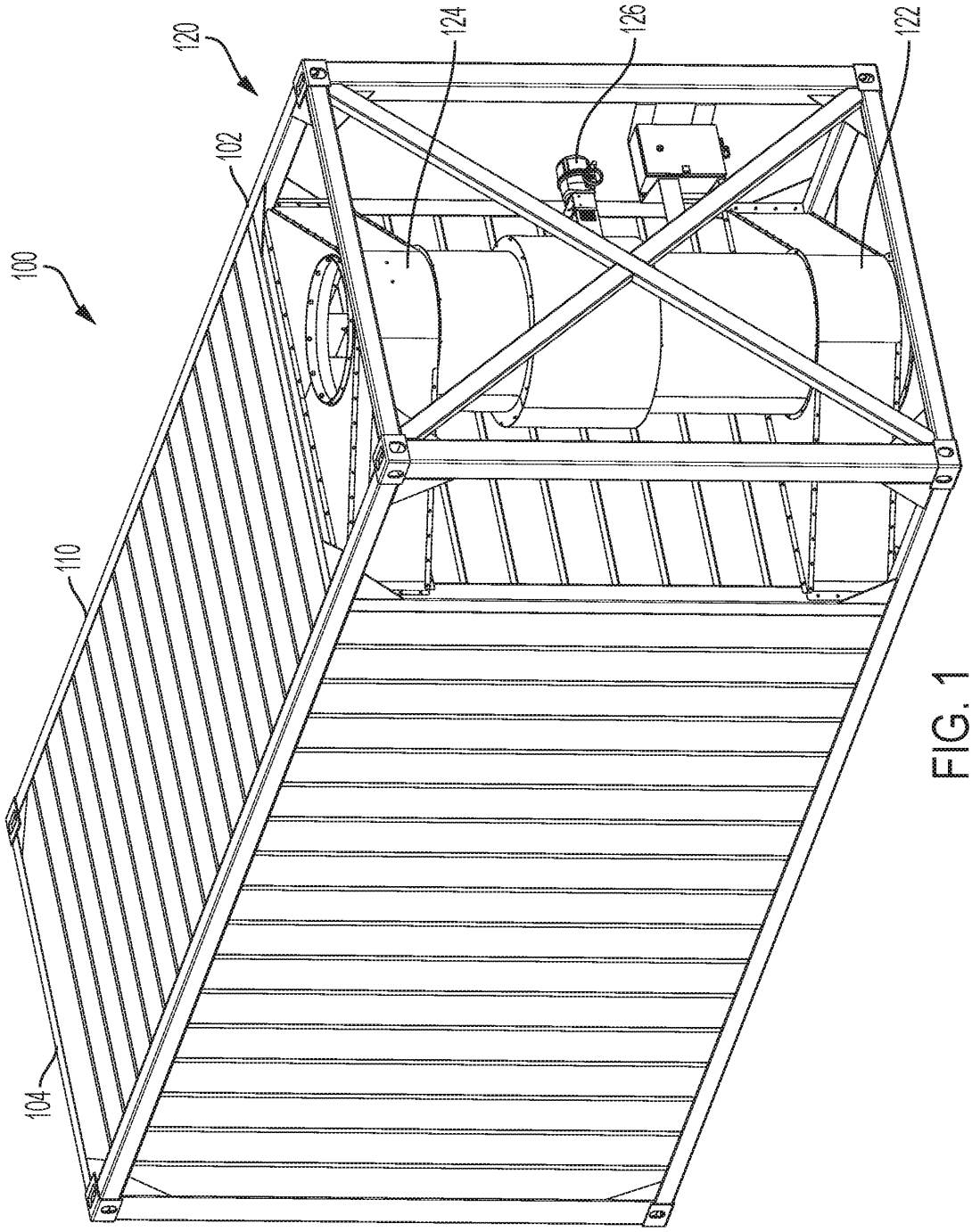

FIG. 1

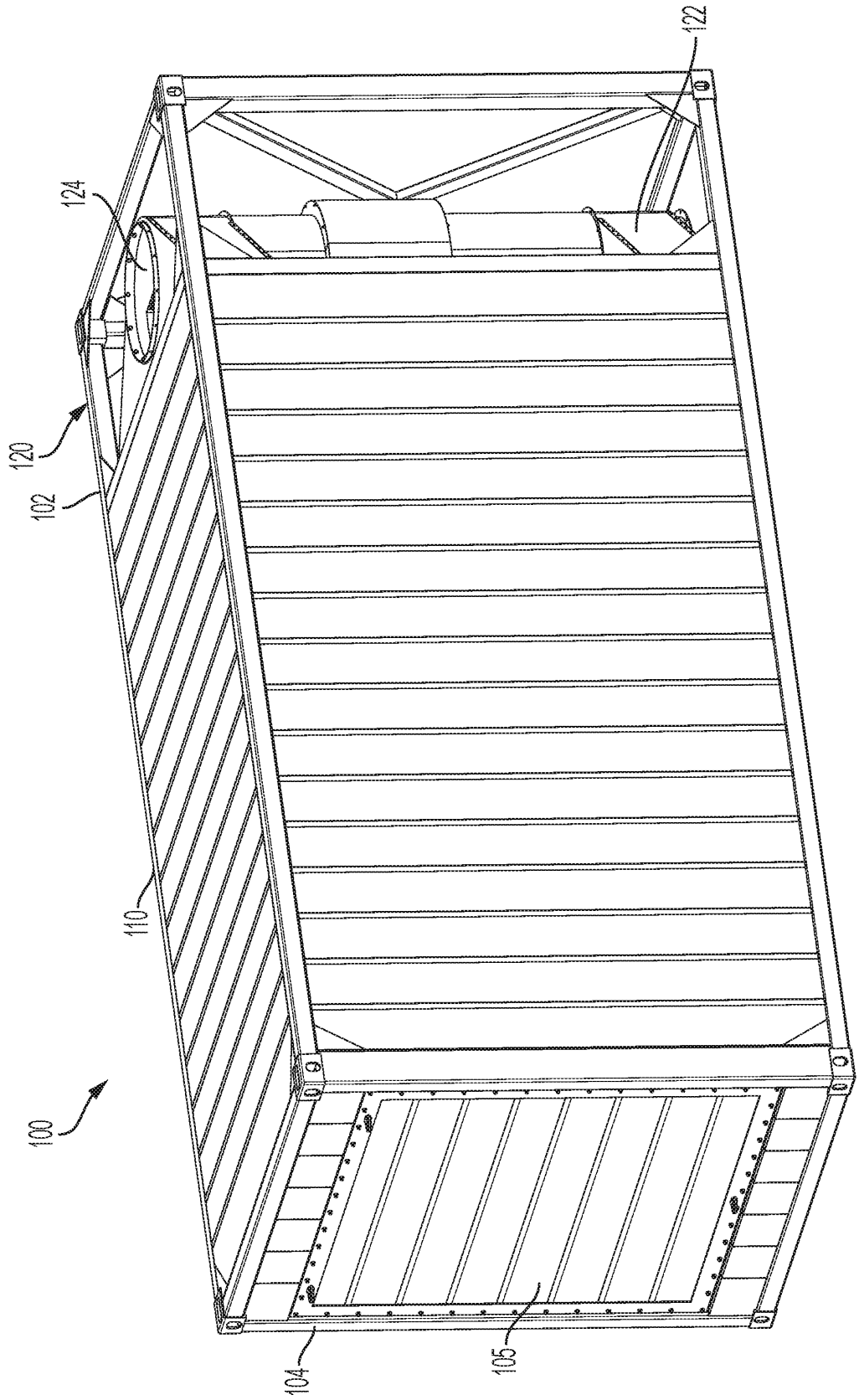

FIG. 2

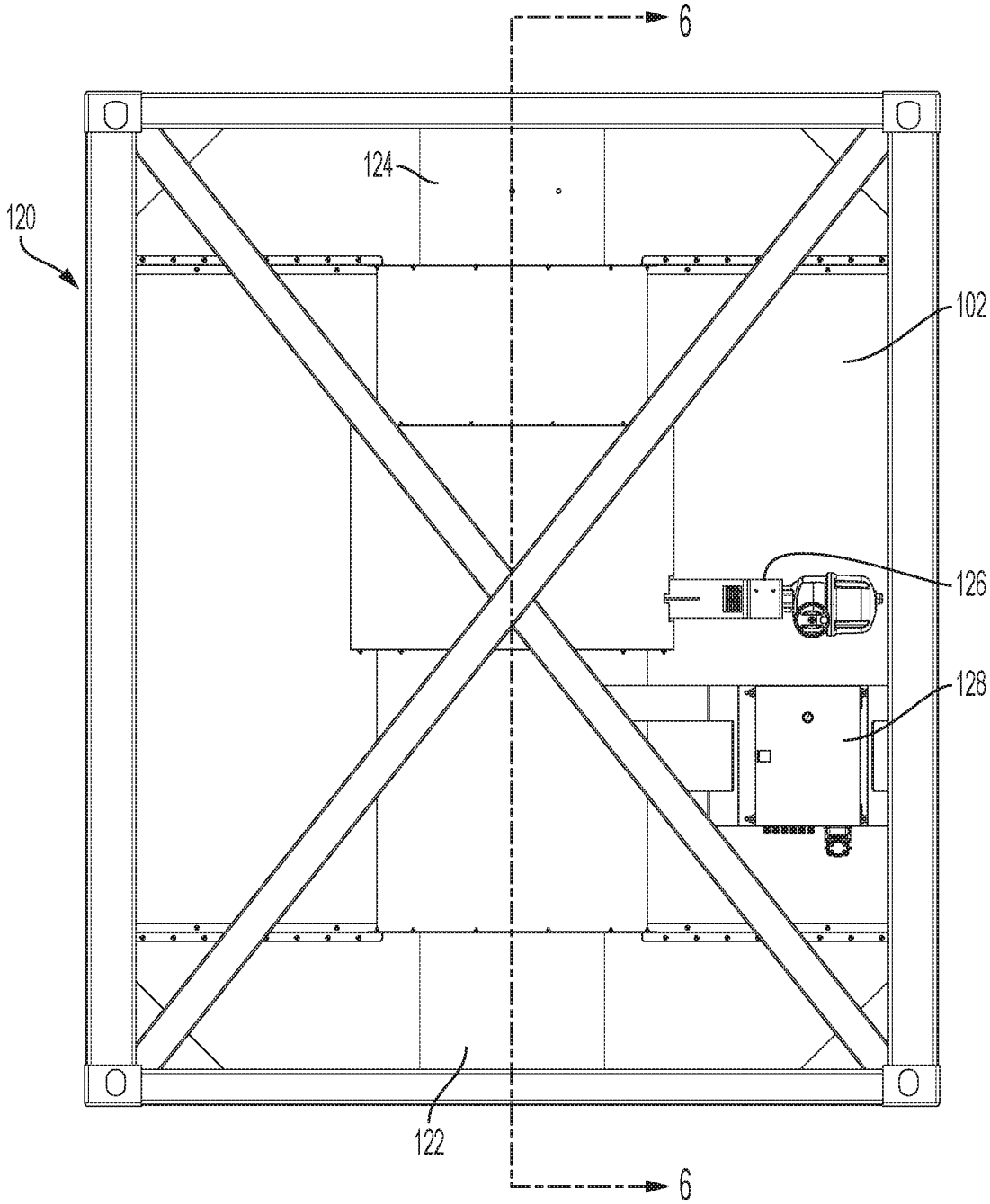

FIG. 3

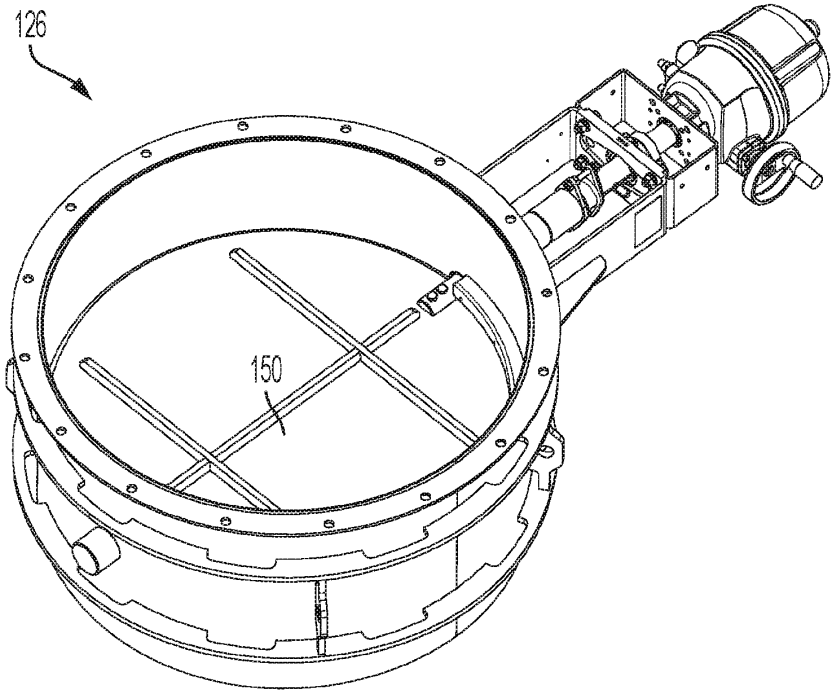

FIG. 4

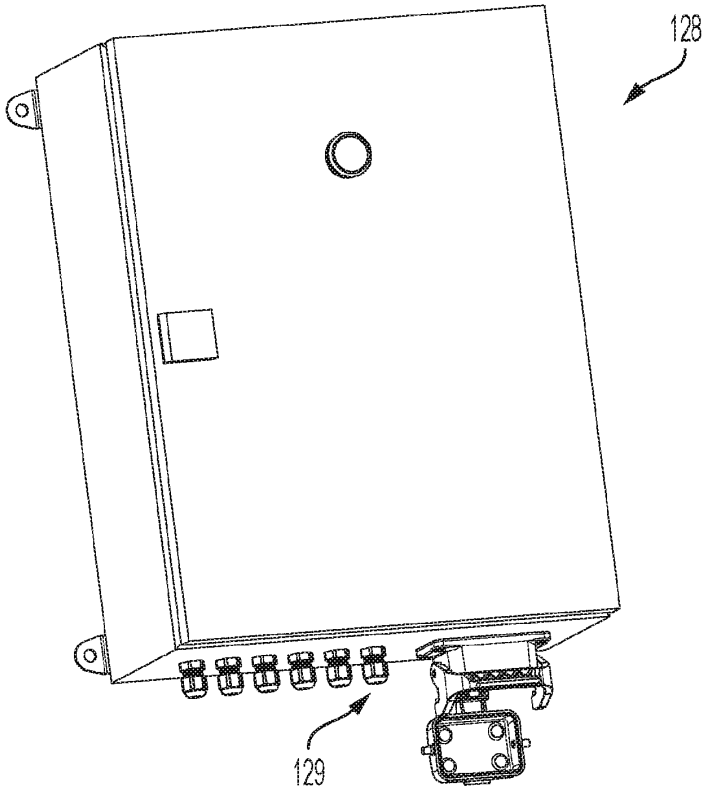

FIG. 5

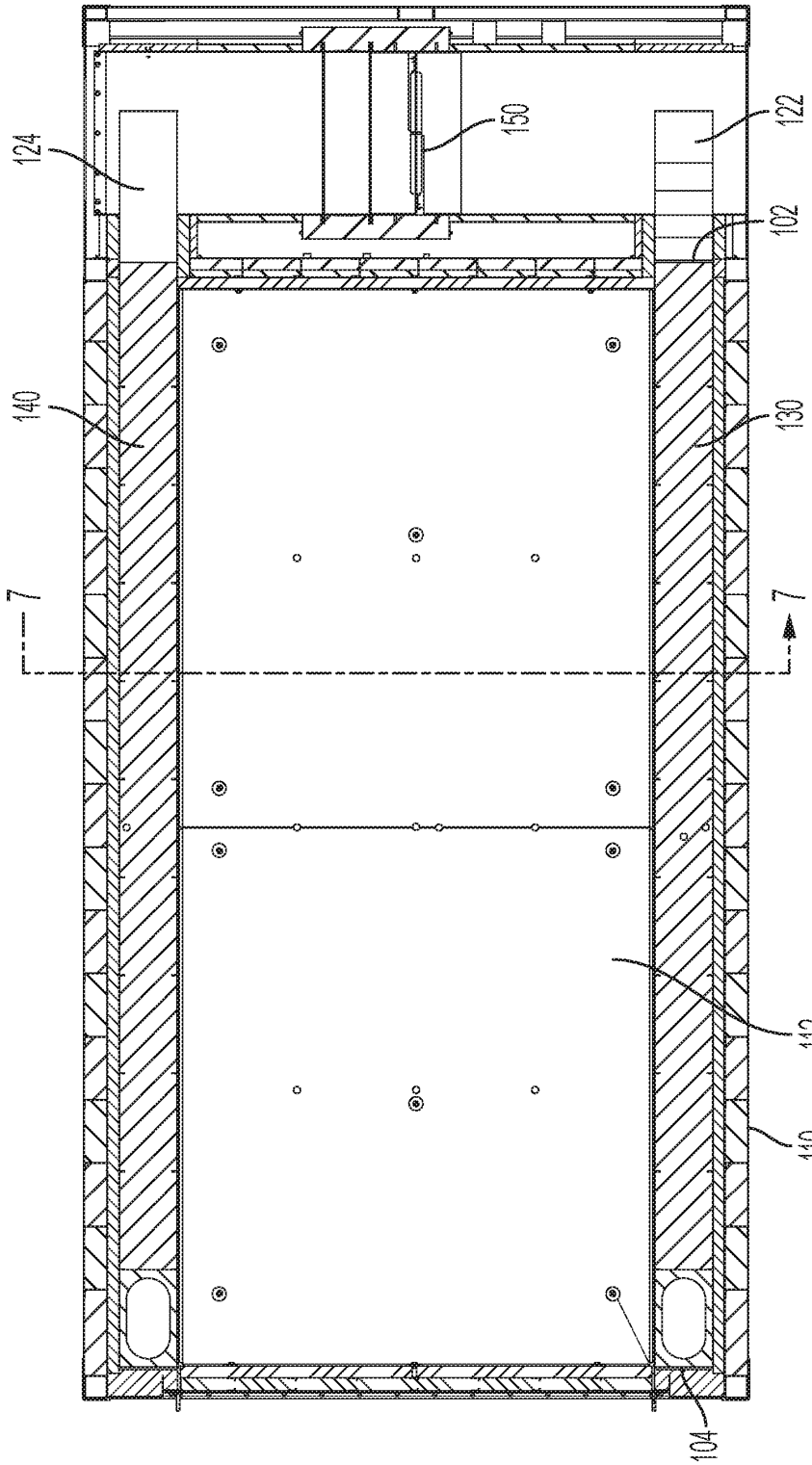

FIG. 6

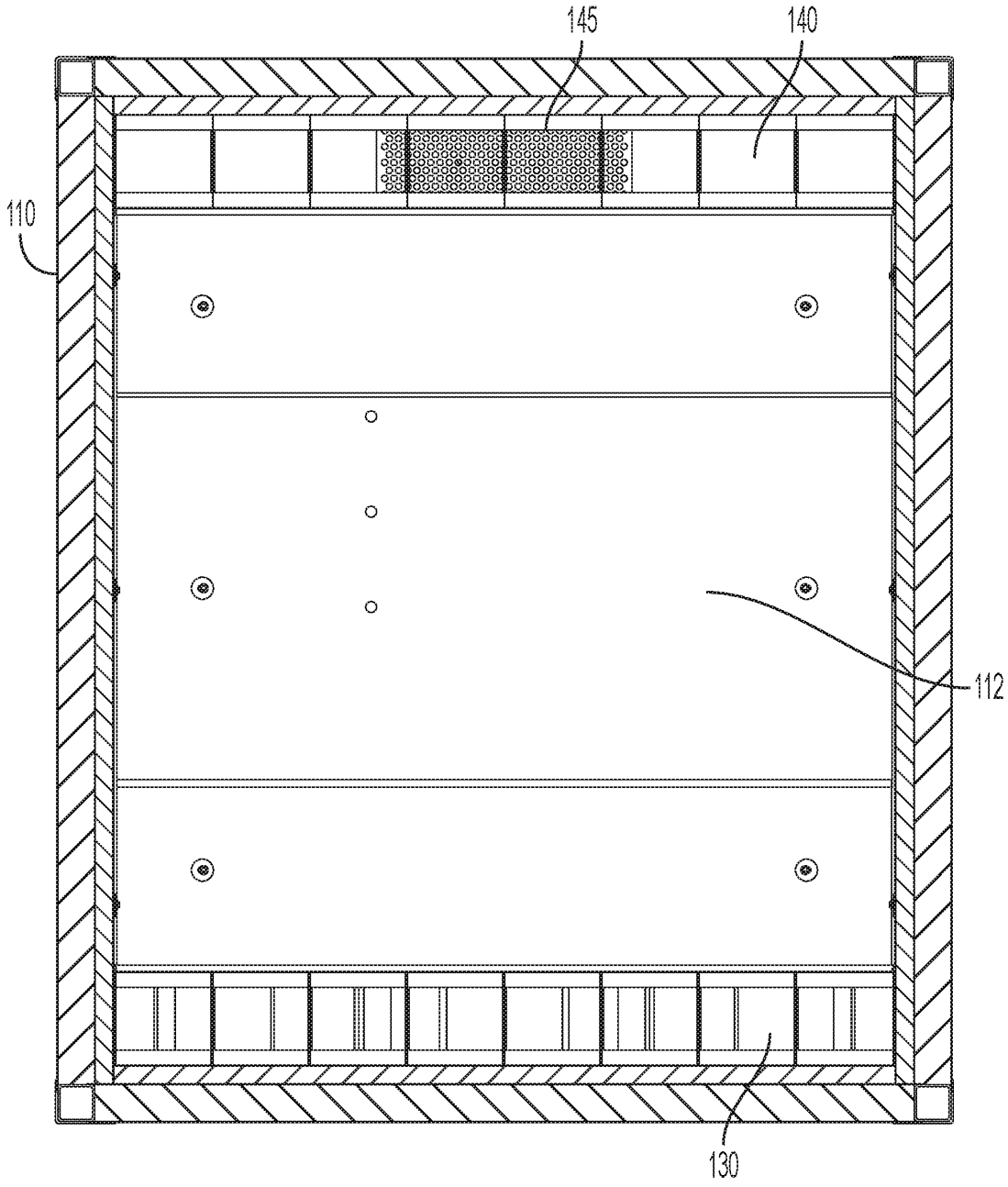

FIG. 7

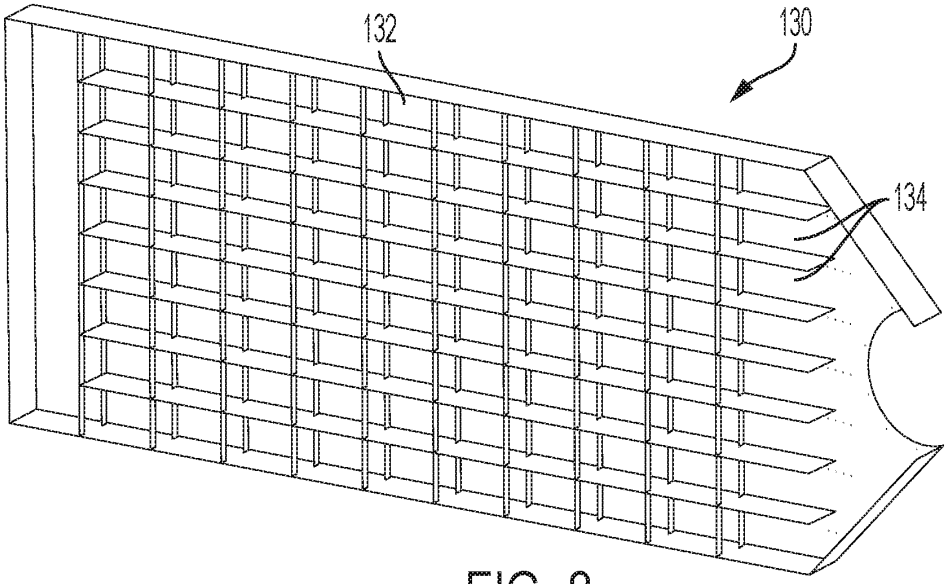

FIG. 8

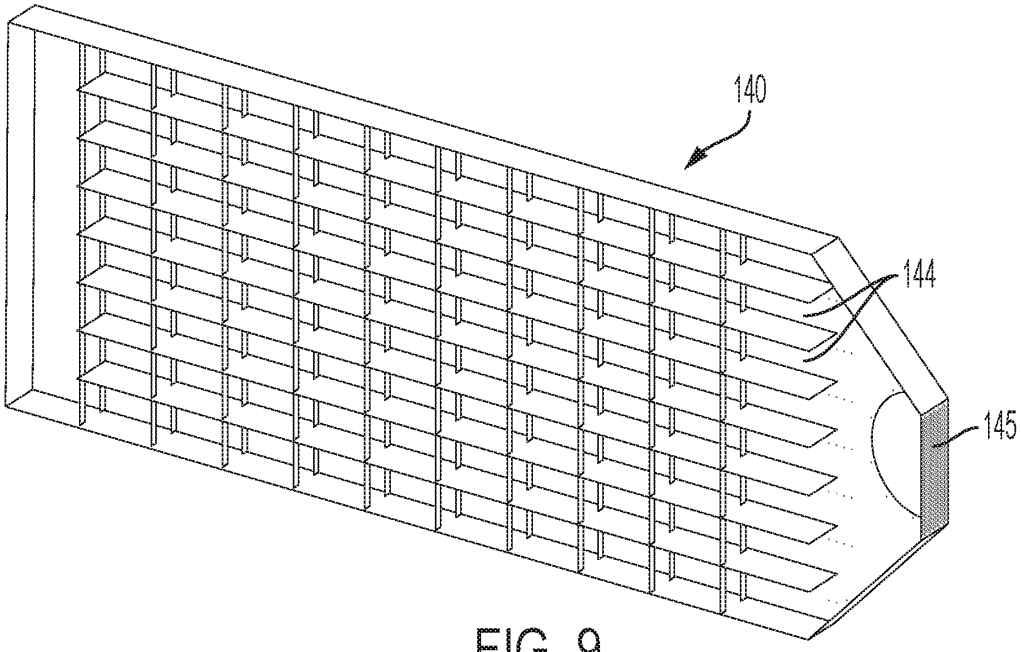

FIG. 9

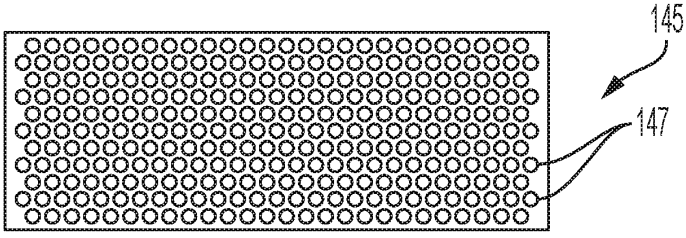

FIG. 10

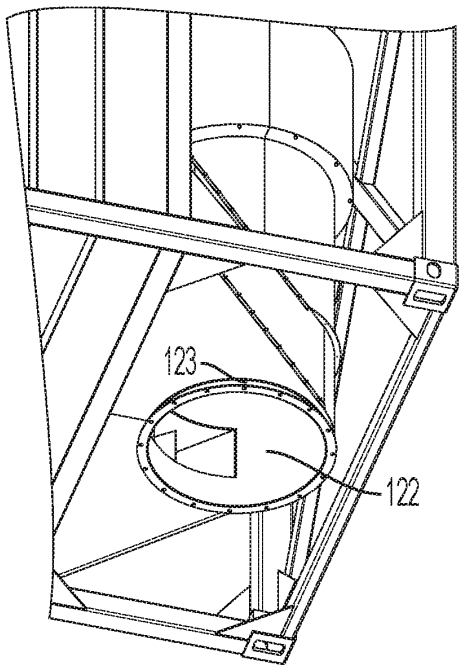

FIG. 11

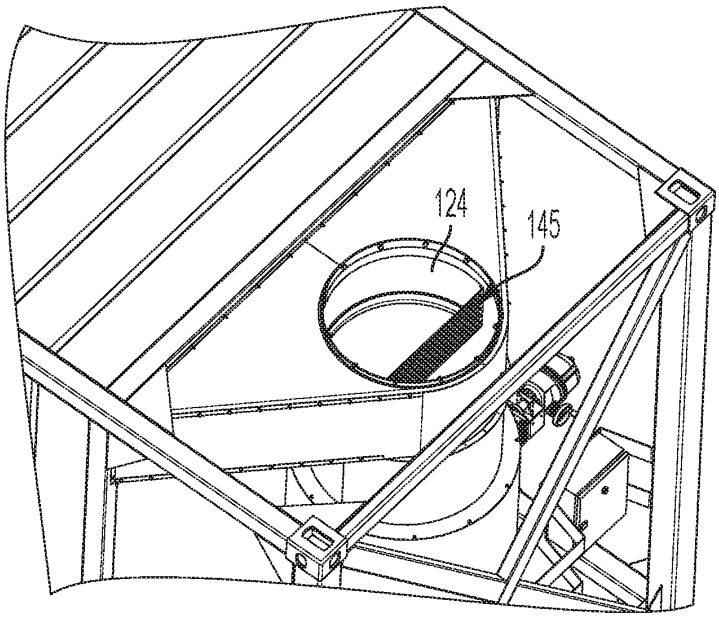

FIG. 12

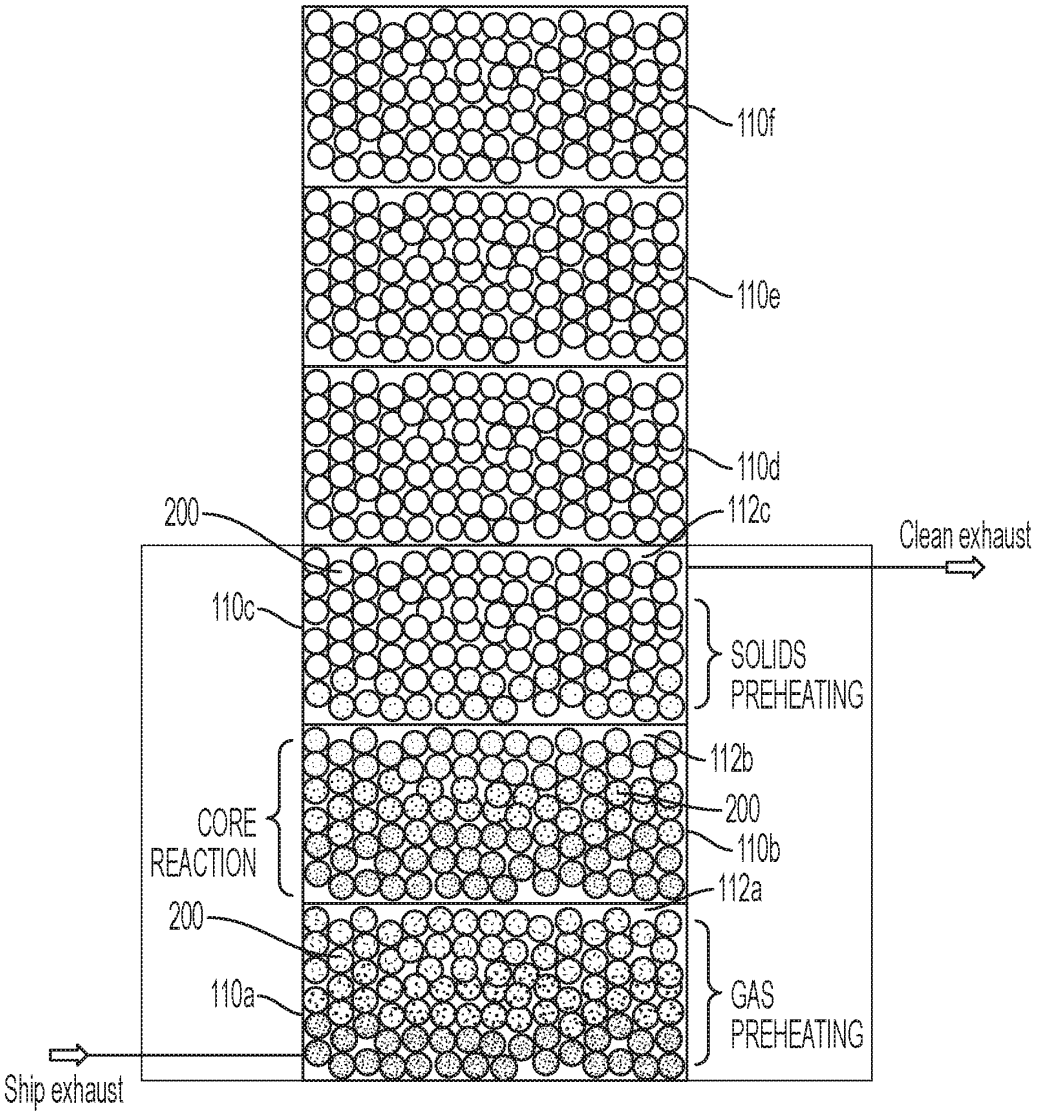
110f
110e
110d
200
112c
Clean exhaust
110c
SOLIDS PREHEATING
112b
CORE REACTION
200
110b
112a
200
110a
GAS PREHEATING
Ship exhaust

FIG. 13

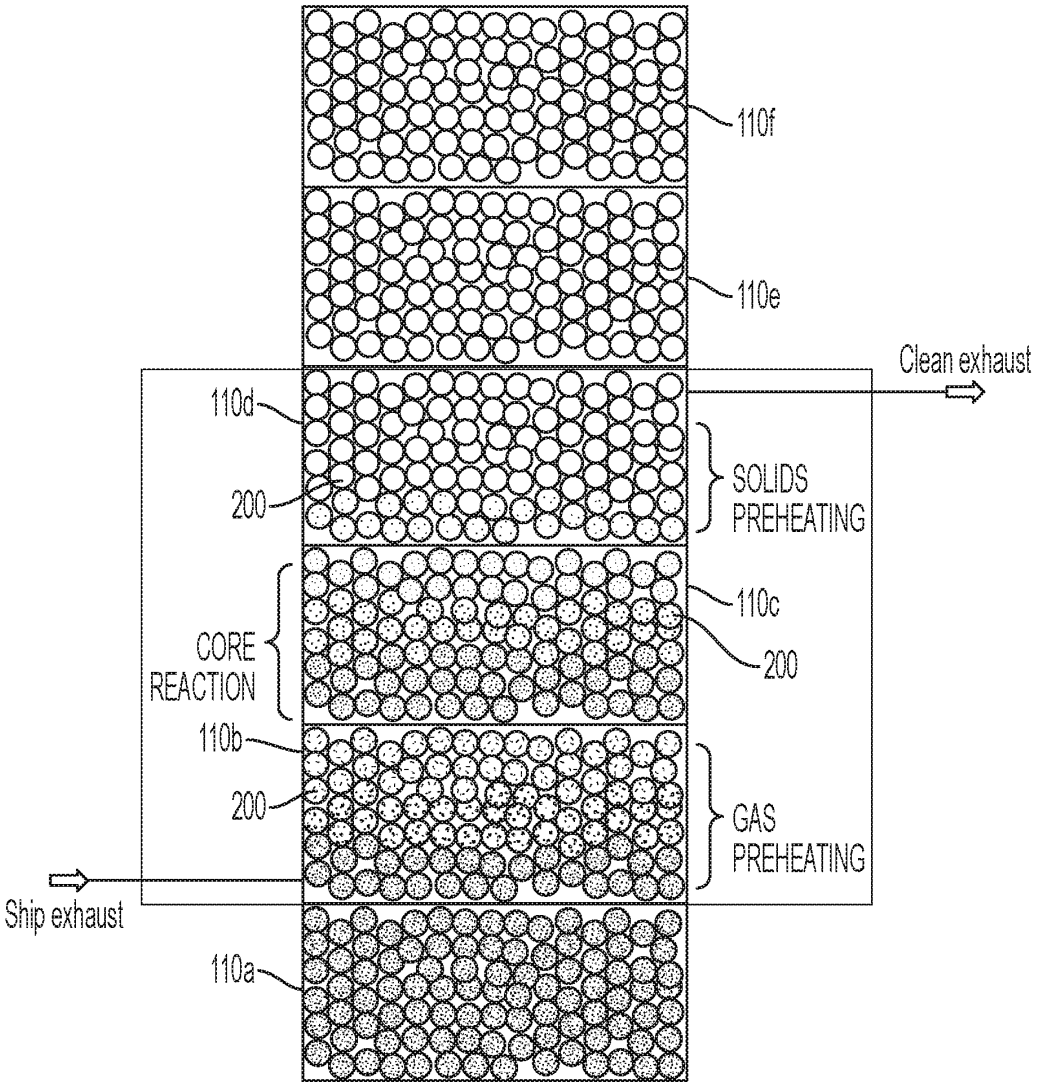
110f
110e
Clean exhaust
110d
200
SOLIDS PREHEATING
CORE REACTION
110c
200
110b
200
GAS PREHEATING
Ship exhaust
110a

FIG. 14

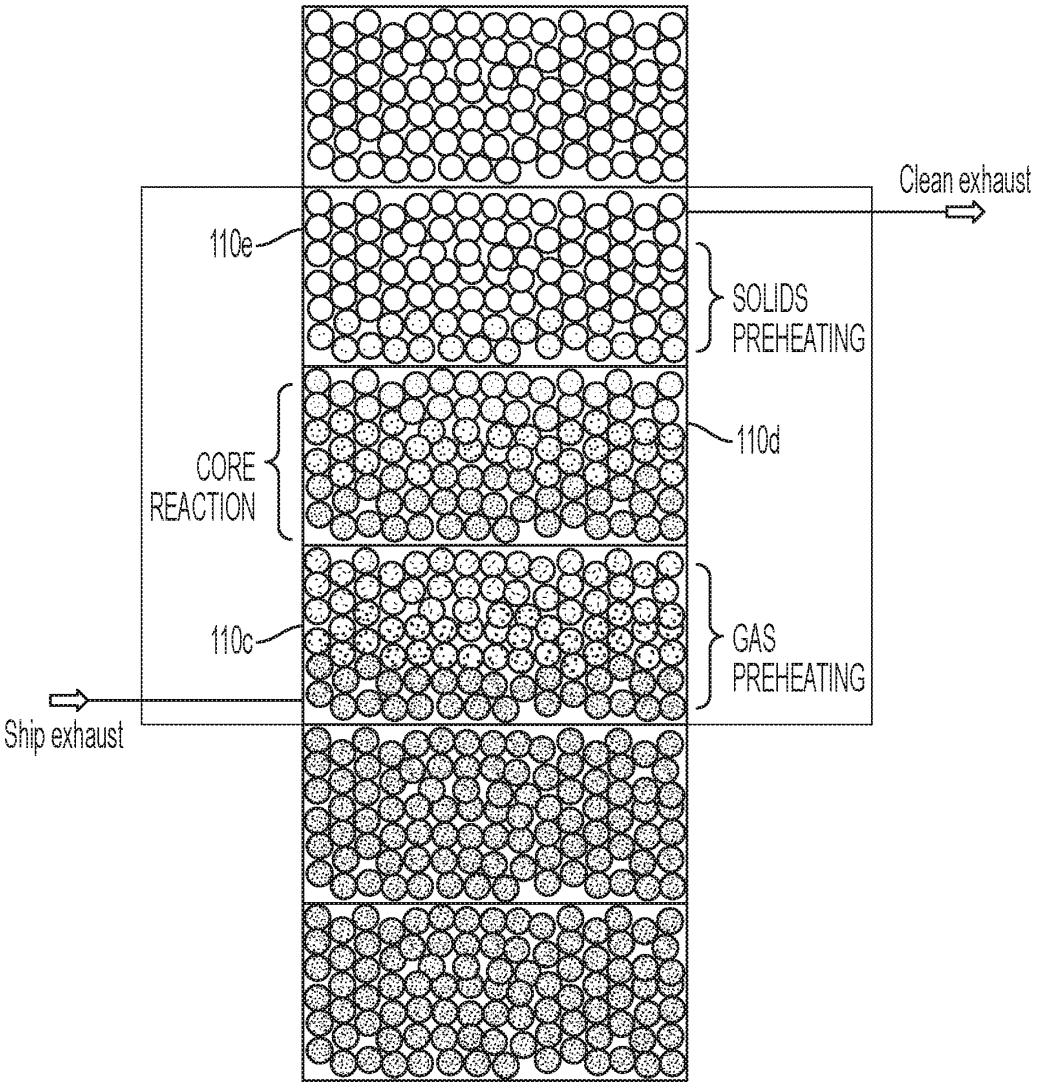
Clean exhaust
110e
SOLIDS
PREHEATING
CORE
REACTION
110d
110c
GAS
PREHEATING
Ship exhaust

FIG. 15

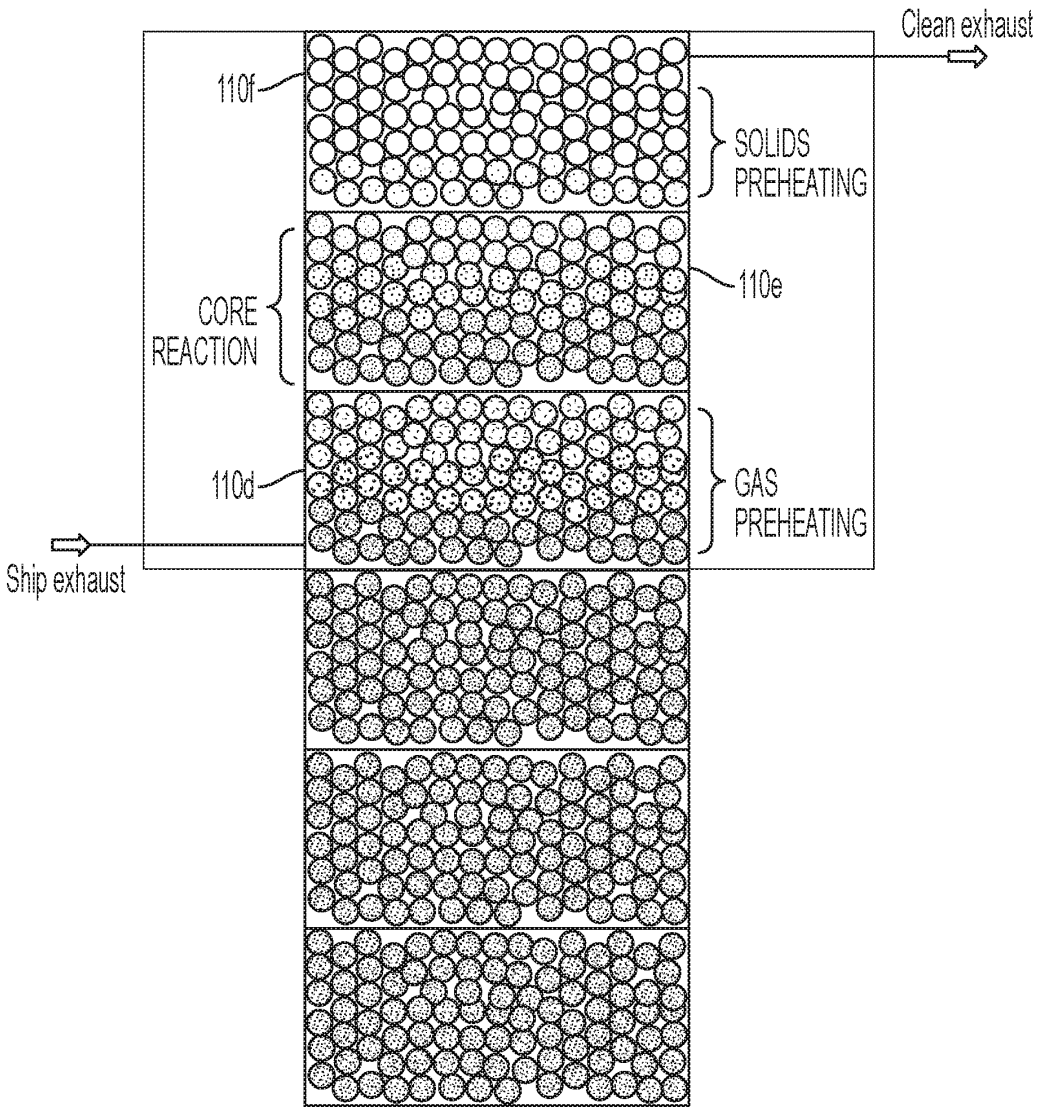
Clean exhaust
110f
SOLIDS PREHEATING
CORE REACTION
110e
110d
GAS PREHEATING
Ship exhaust

FIG. 16

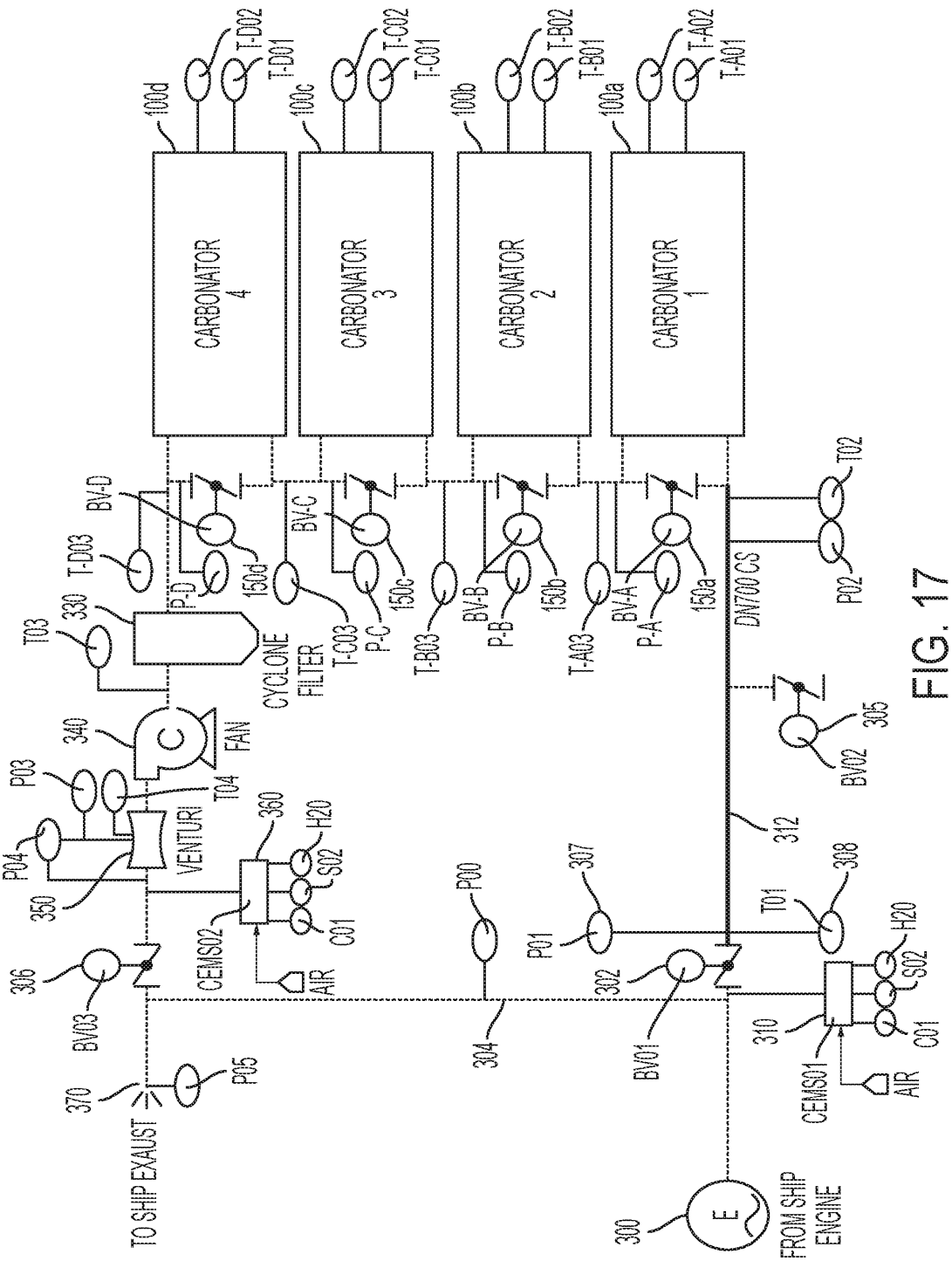
CARBONATOR 4
CARBONATOR 3
CARBONATOR 2
CARBONATOR 1
100d
100c
100b
100a
T-D02
T-D01
T-C02
T-C01
T-B02
T-B01
T-A02
T-A01
BV-D
BV-C
BV-B
BV-A
P-D
P-C
P-B
P-A
150d
150c
150b
150a
T-D03
T-C03
T-B03
T-A03
T03
330
CYCLONE FILTER
340
FAN
T04
P03
VENTURI
P04
350
360
H20
S02
C01
CEMS02
AIR
306
BV03
370
P05
TO SHIP EXAUST
P00
304
P01
307
BV01
302
T01
308
312
DN700 CS
T02
P02
305
BV02
310
CEMS01
300
E
FROM SHIP ENGINE

FIG. 17

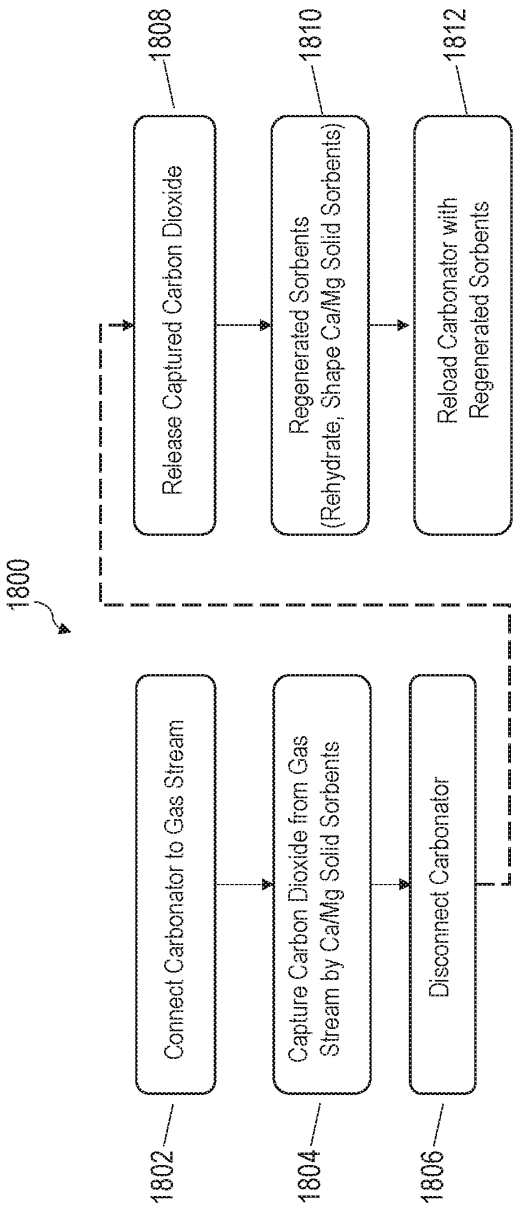
1800
1802
Connect Carbonator to Gas Stream
1804
Capture Carbon Dioxide from Gas Stream by Ca/Mg Solid Sorbents
1806
Disconnect Carbonator
1808
Release Captured Carbon Dioxide
1810
Regenerated Sorbents (Rehydrate, Shape Ca/Mg Solid Sorbents)
1812
Reload Carbonator with Regenerated Sorbents

FIG. 18