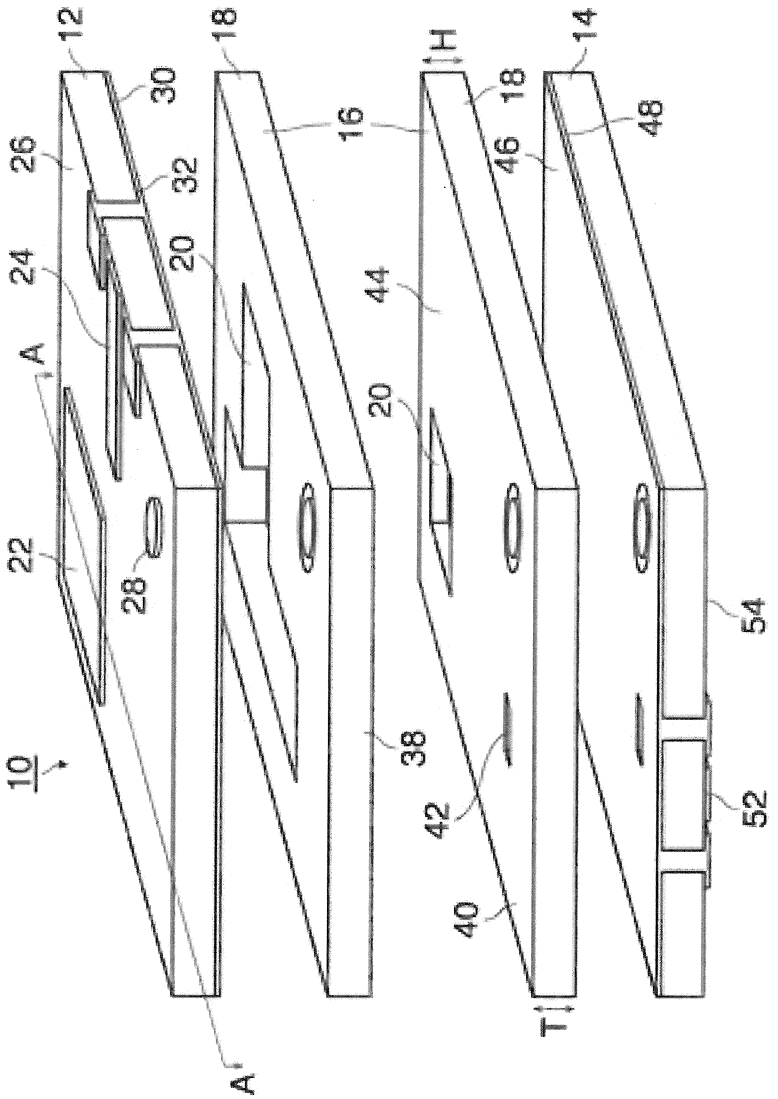

FIG. 1A

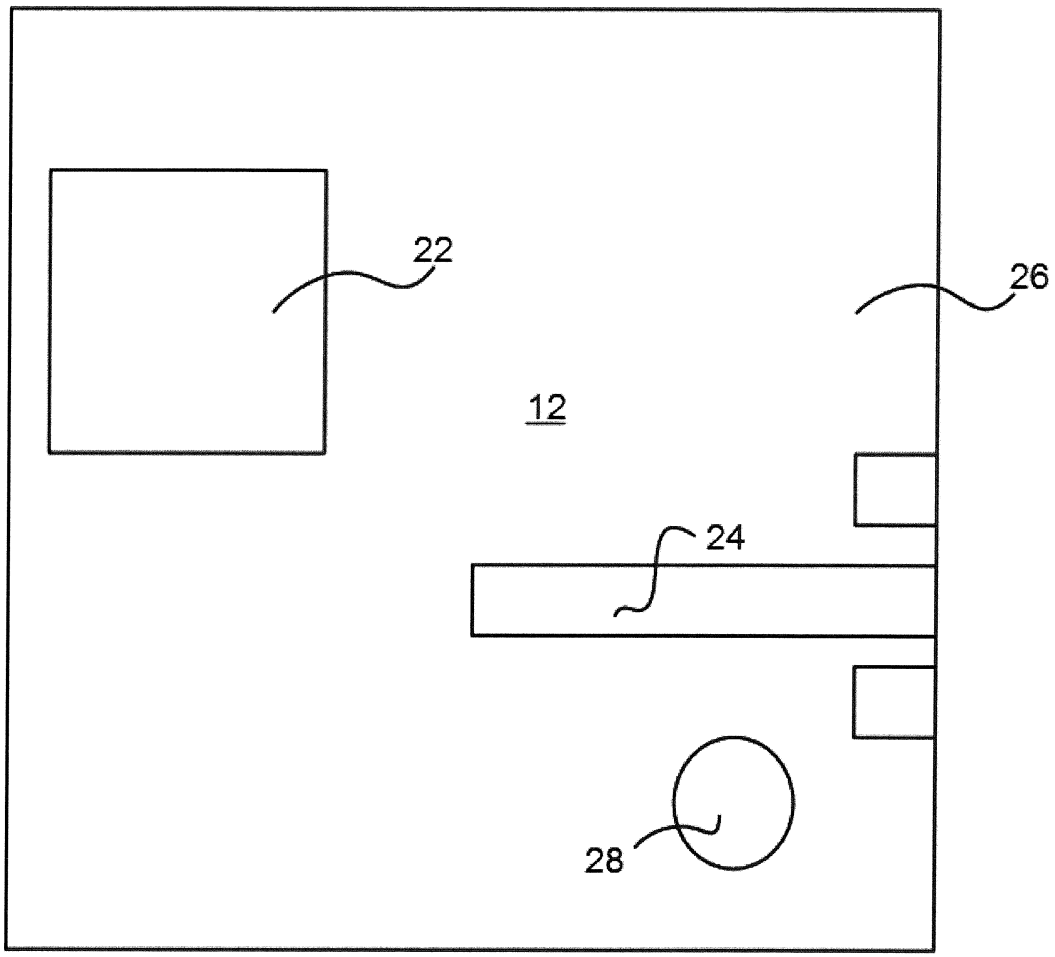

FIG. 1B

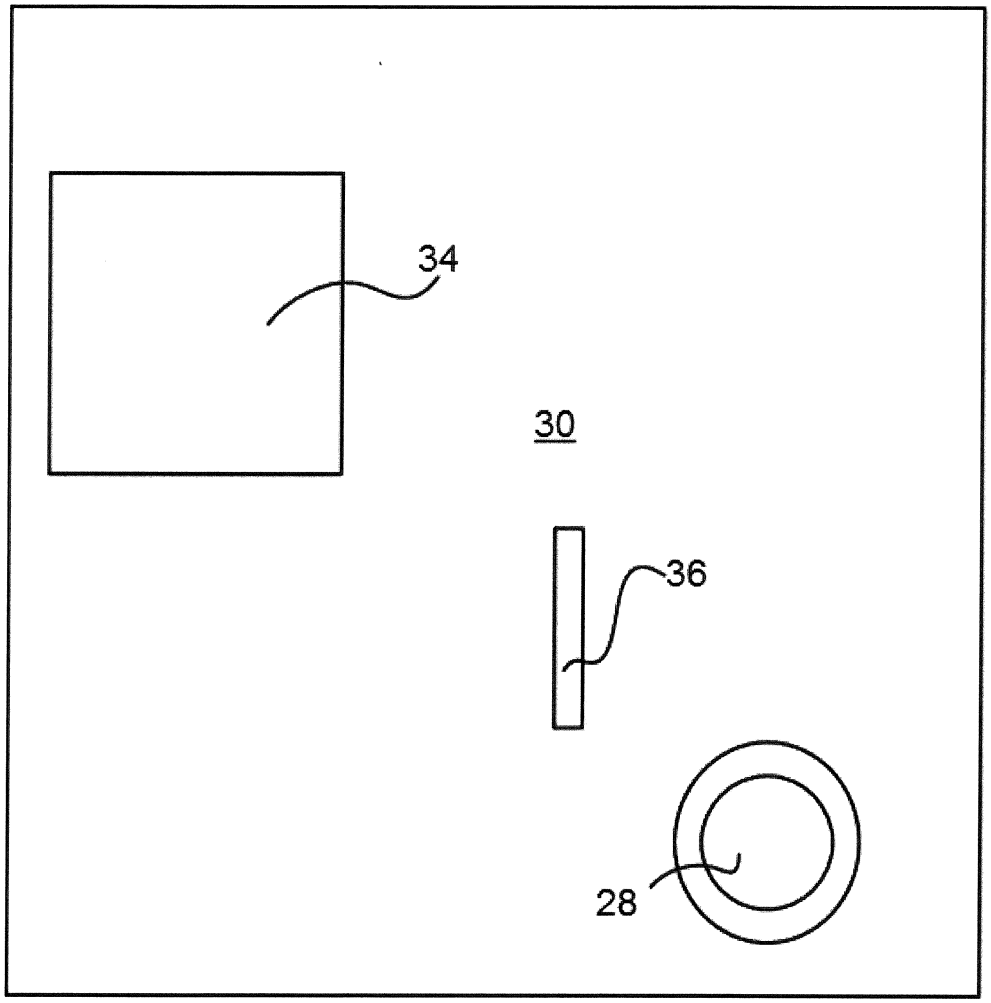

FIG. 1C

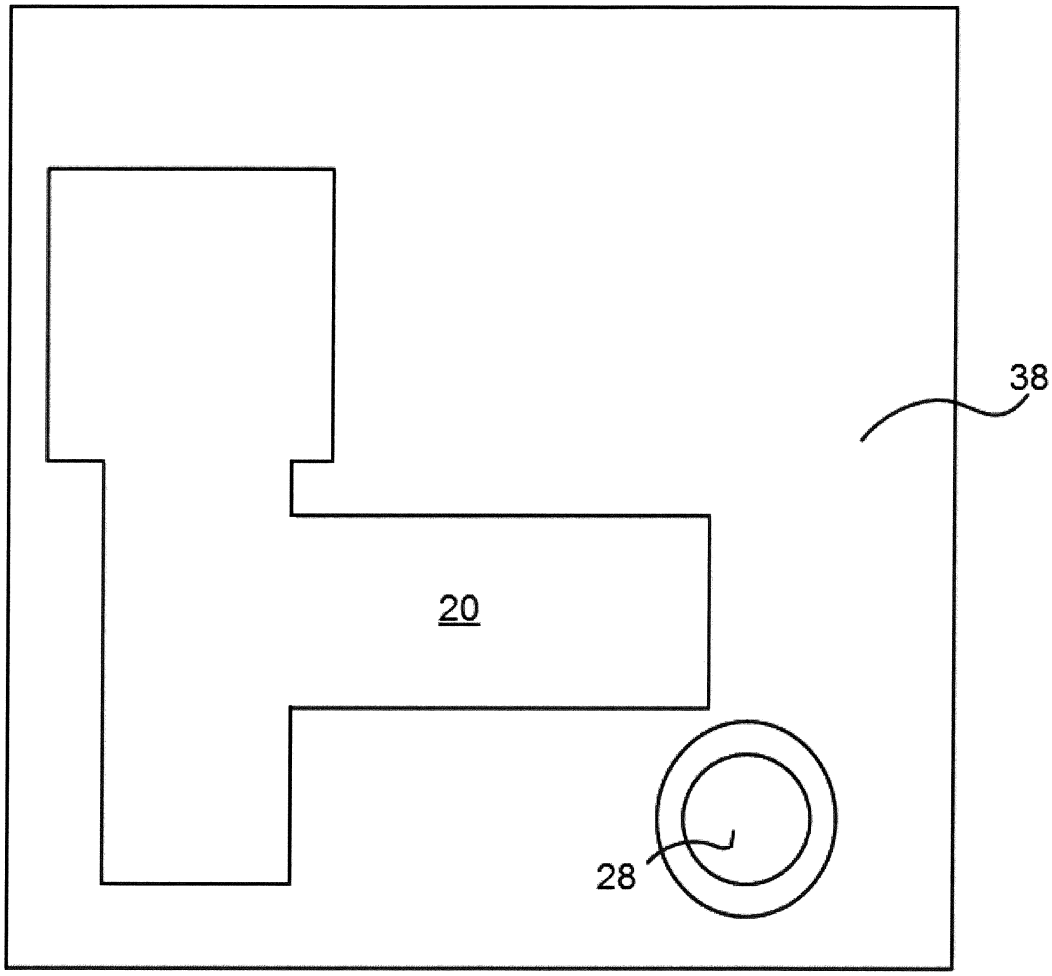

FIG. 1D

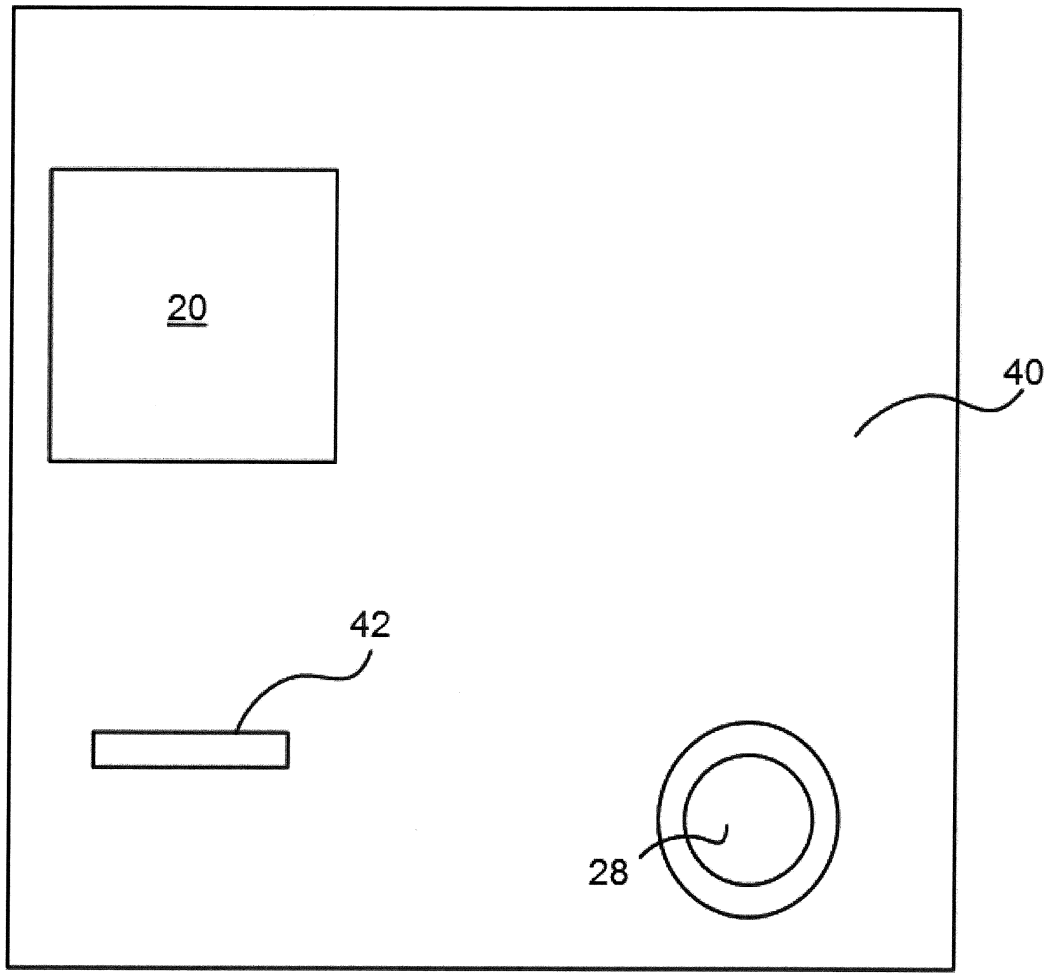

FIG. 1E

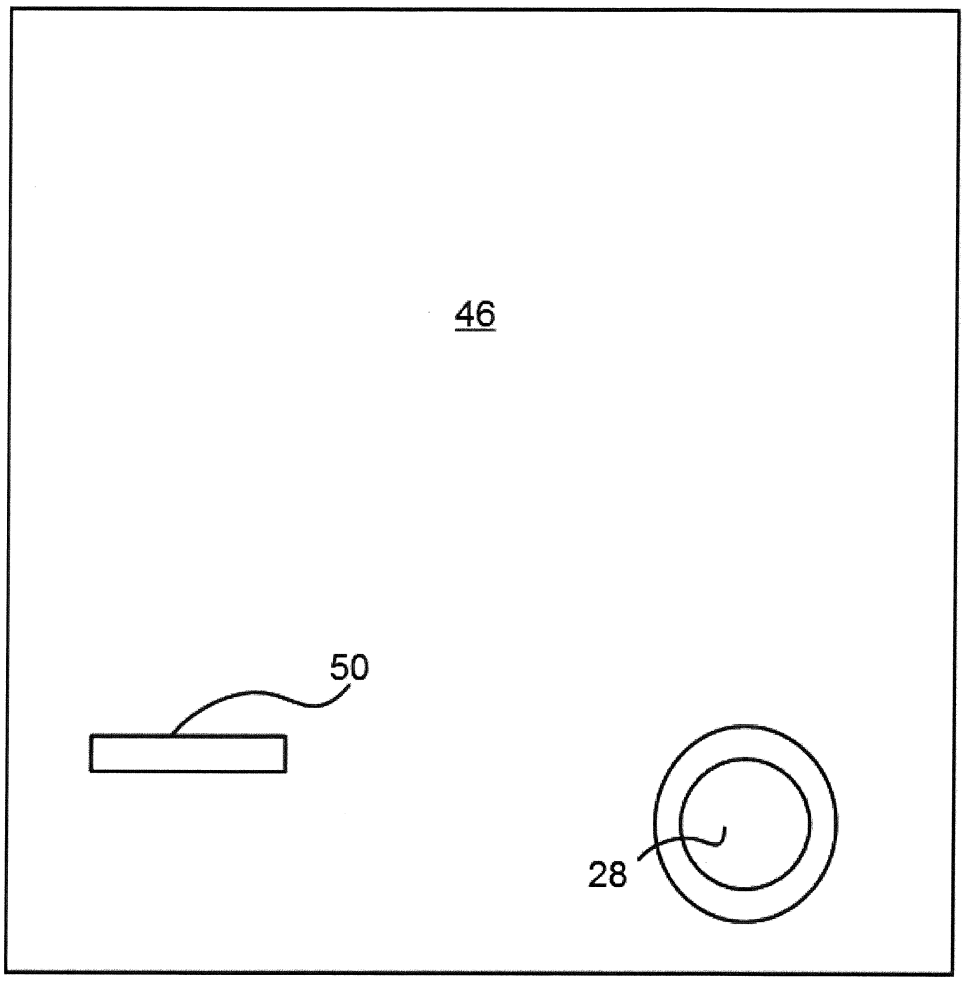

FIG. 1F

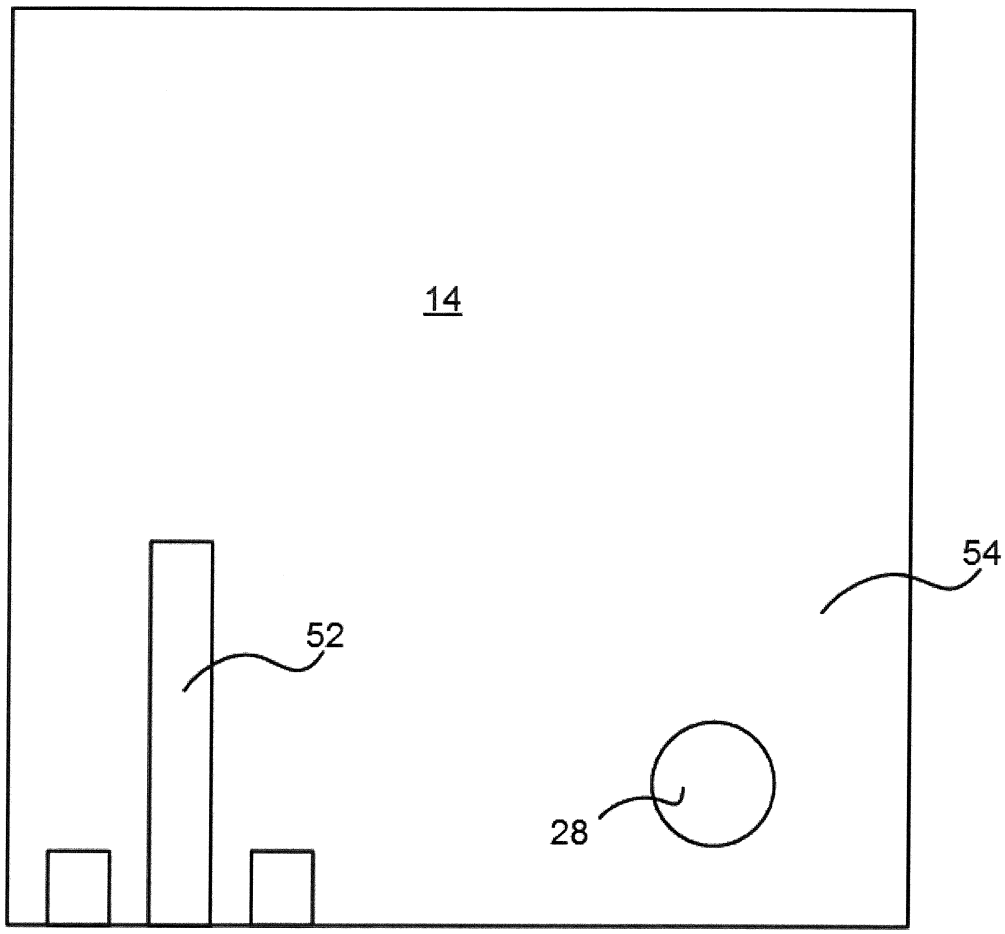

FIG. 1G

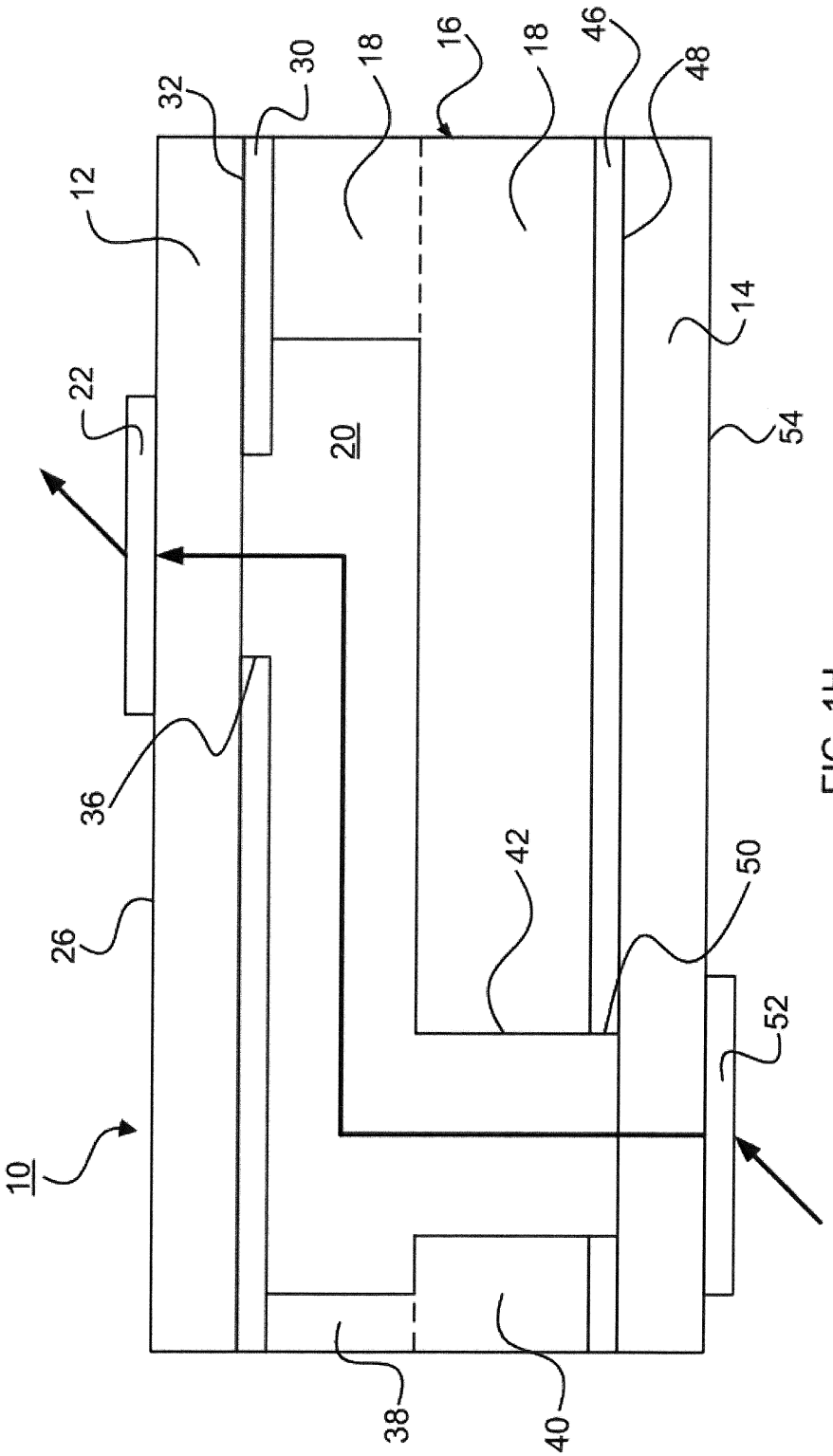

FIG. 1H

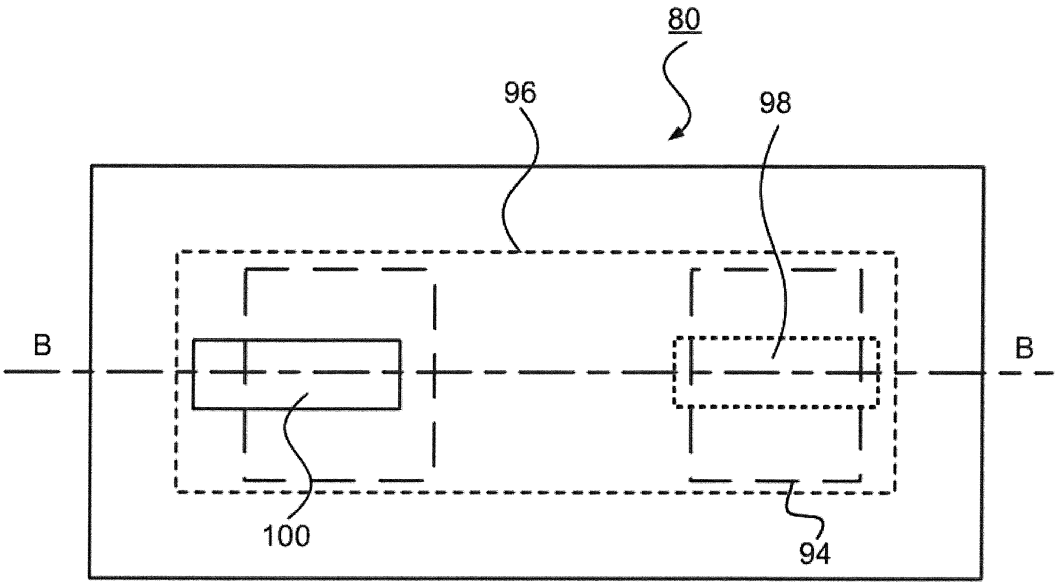

FIG. 2A

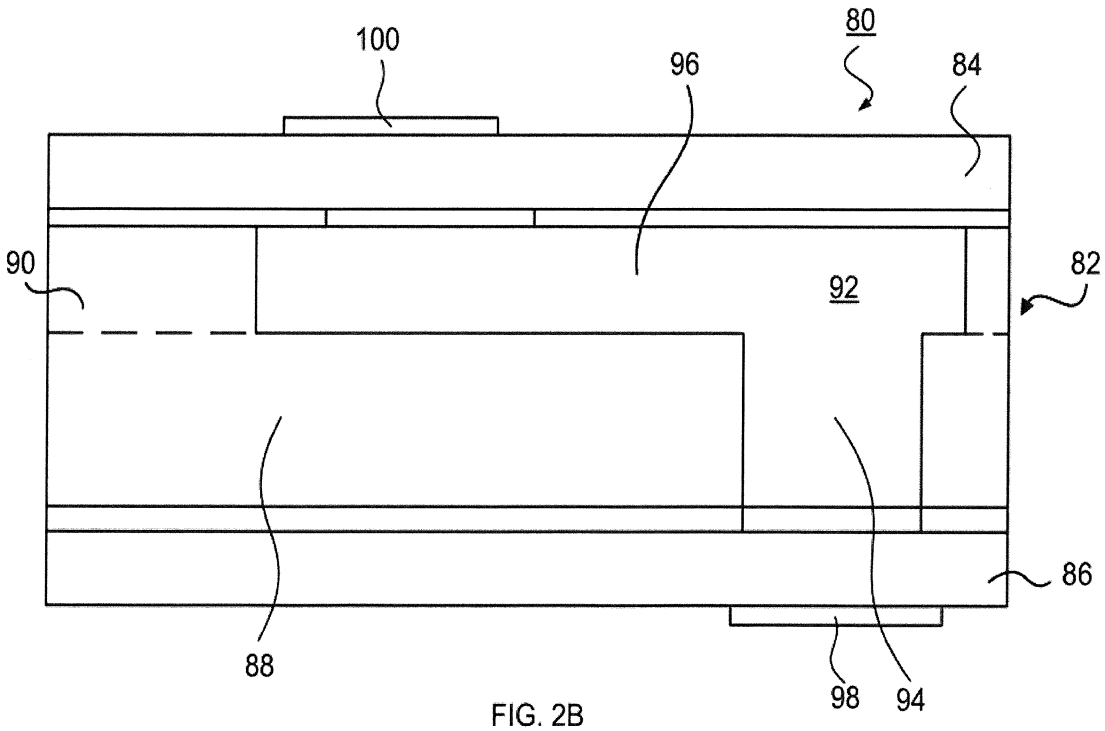

FIG. 2B

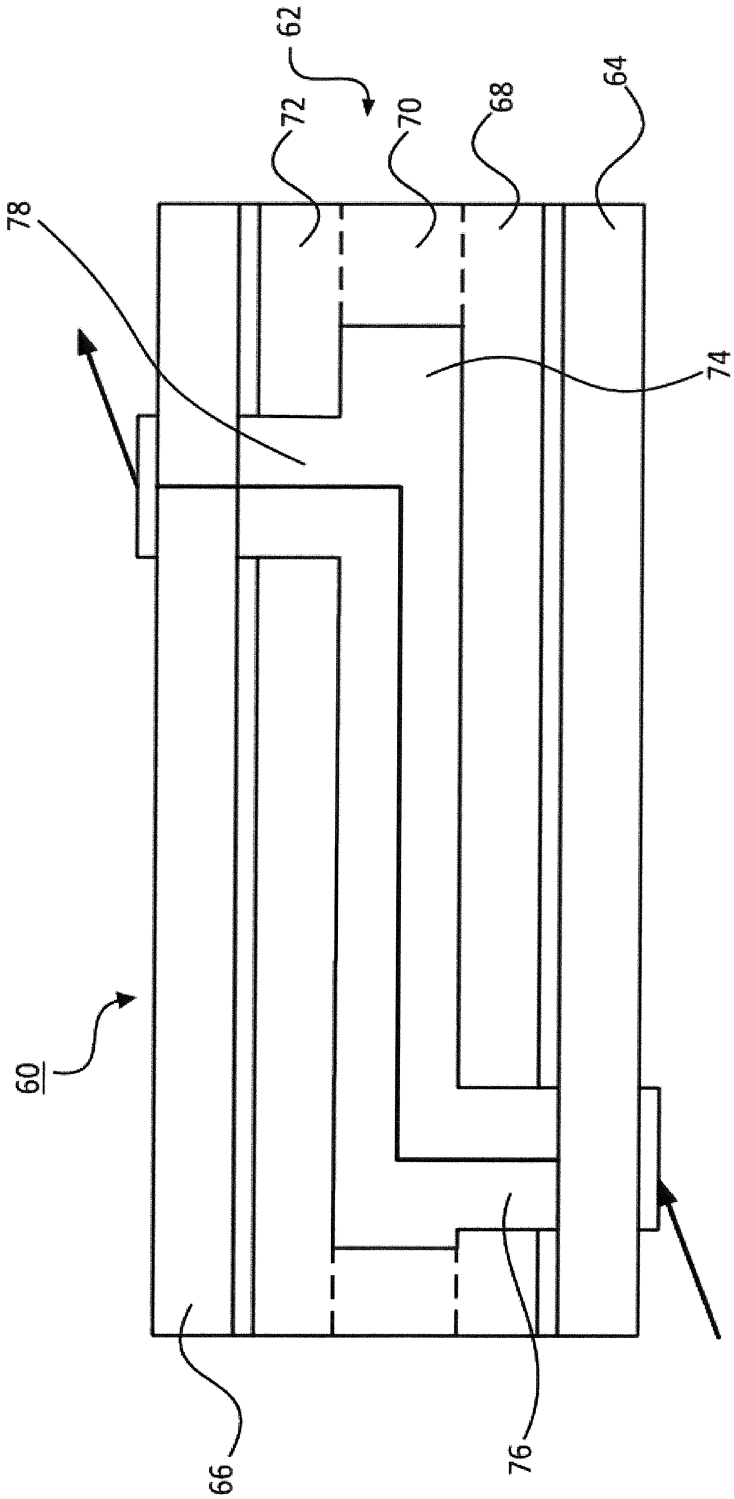

FIG. 3A

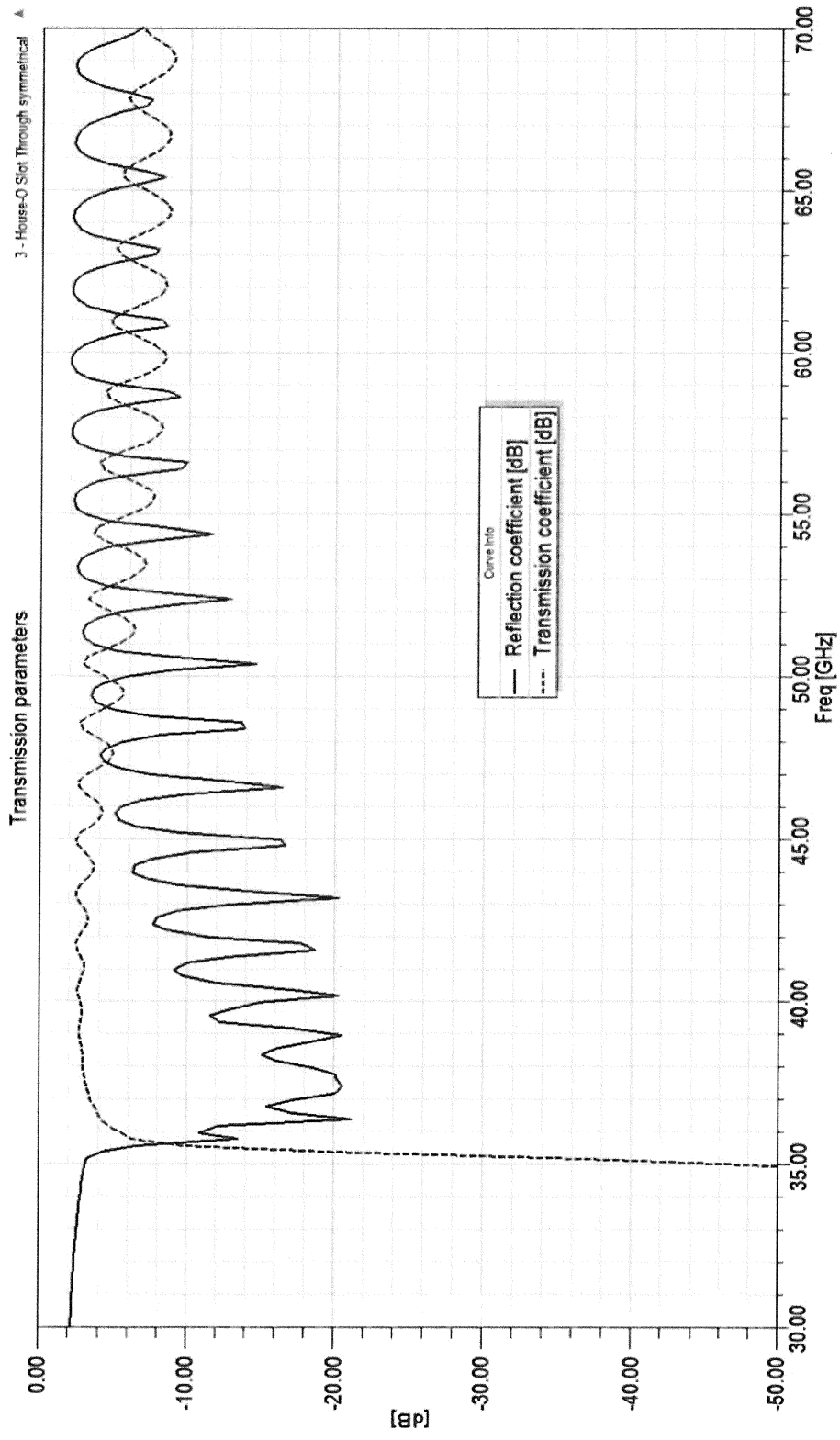
3 - House-O Slot Through symmetrical
Transmission parameters
Curve Info
Reflection coefficient [dB]
Transmission coefficient [dB]
[dB]
0.00
-10.00
-20.00
-30.00
-40.00
-50.00
30.00
35.00
40.00
45.00
50.00
55.00
60.00
65.00
70.00
Freq [GHz]

FIG. 3B

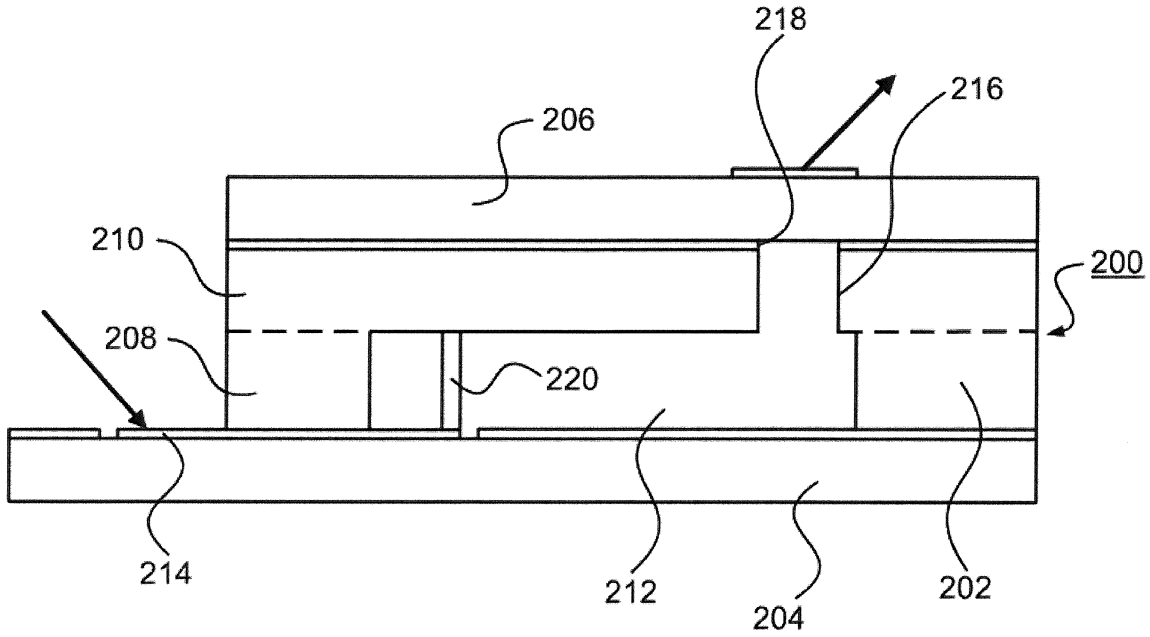
218
216
206
210
200
208
220
214
212
204
202

FIG. 4A

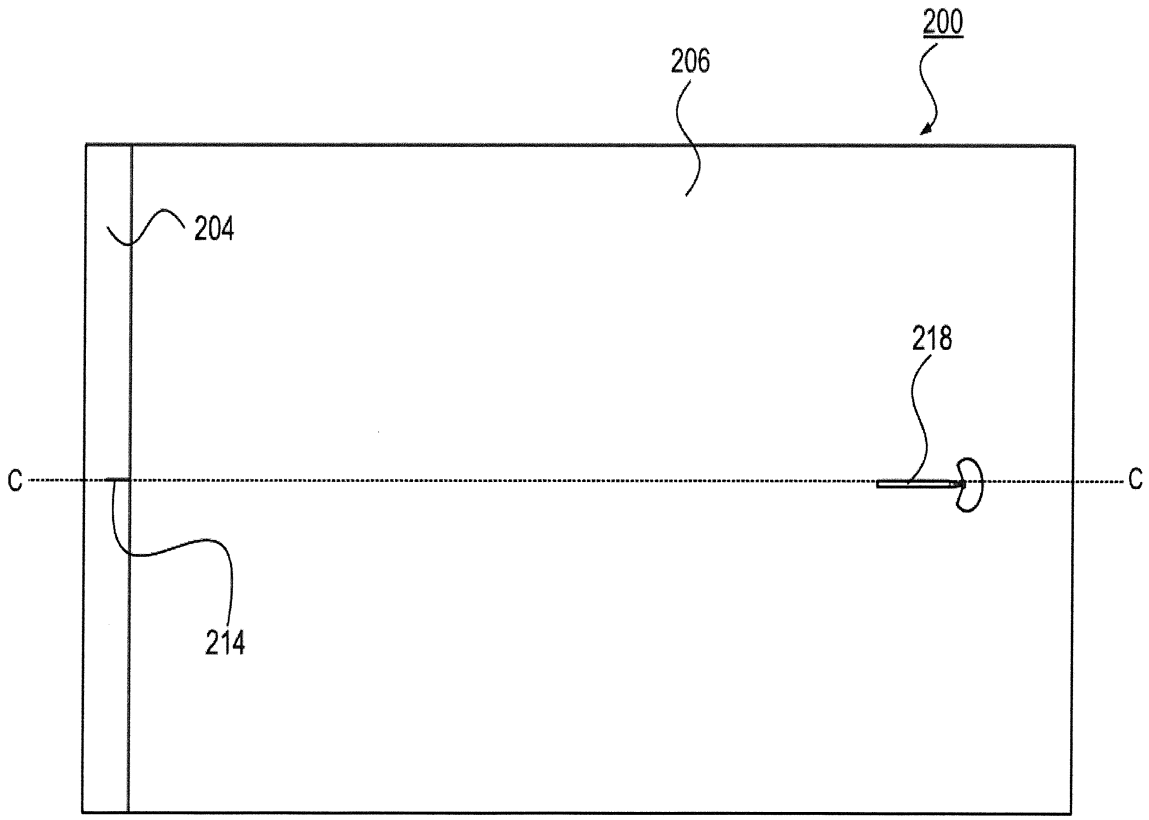
200
206
204
218
C
C
214

FIG. 4B

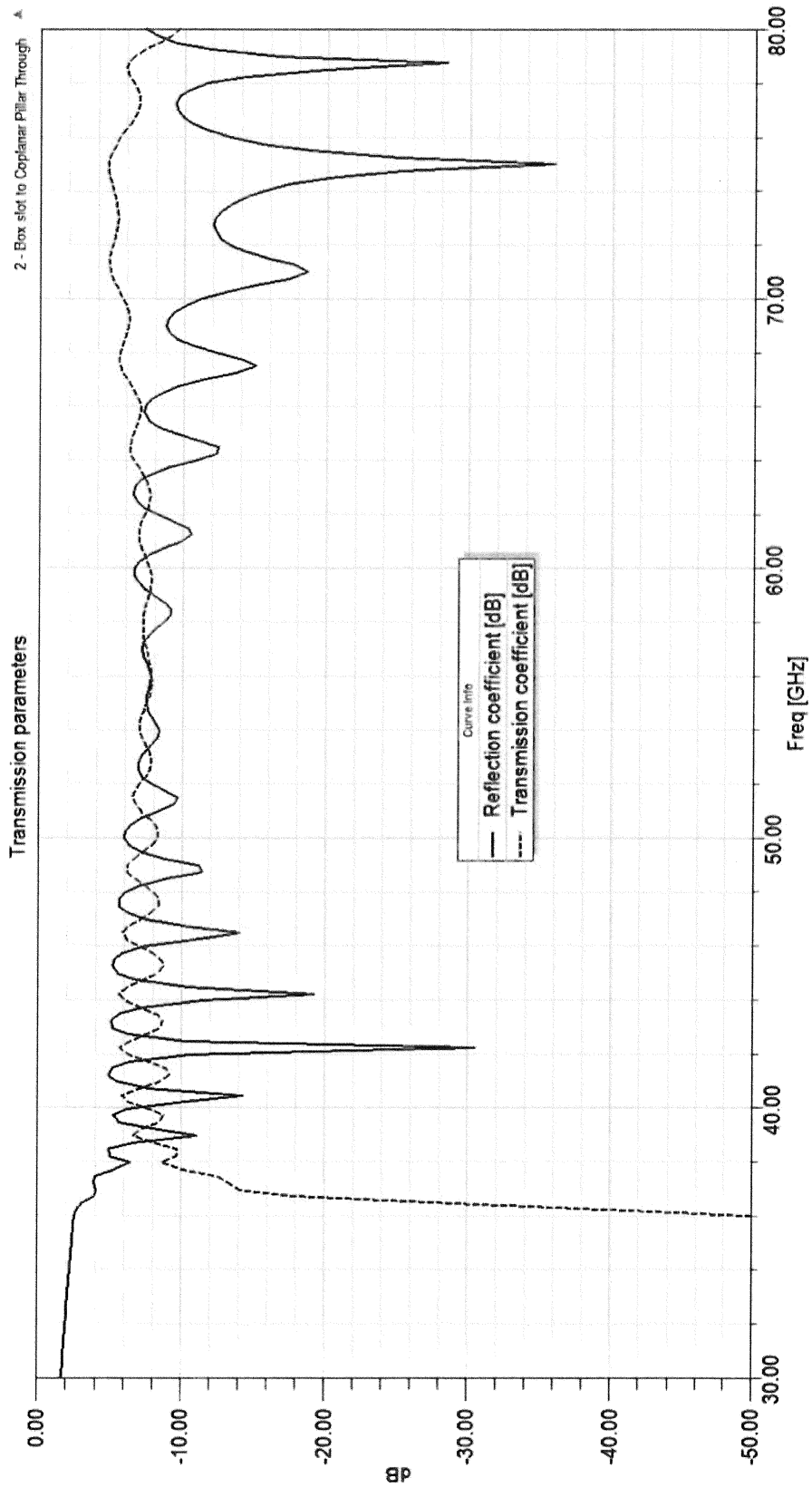
2 - Box slot to Coplanar Pillar Through
Transmission parameters
Curve Info
Reflection coefficient [dB]
Transmission coefficient [dB]
dB
0.00
-10.00
-20.00
-30.00
-40.00
-50.00
30.00
40.00
50.00
60.00
70.00
80.00
Freq [GHz]

FIG. 4C

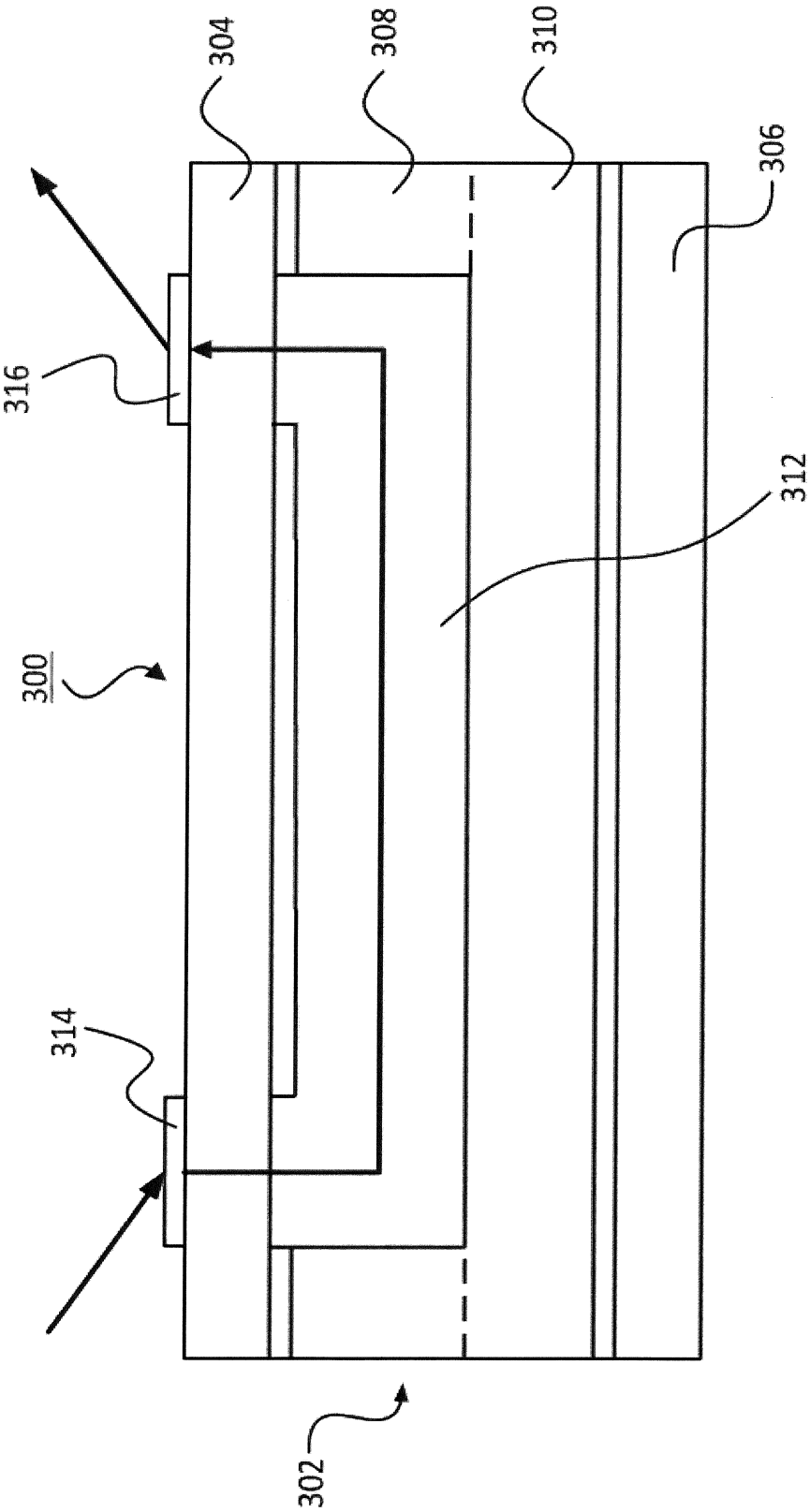

FIG. 5

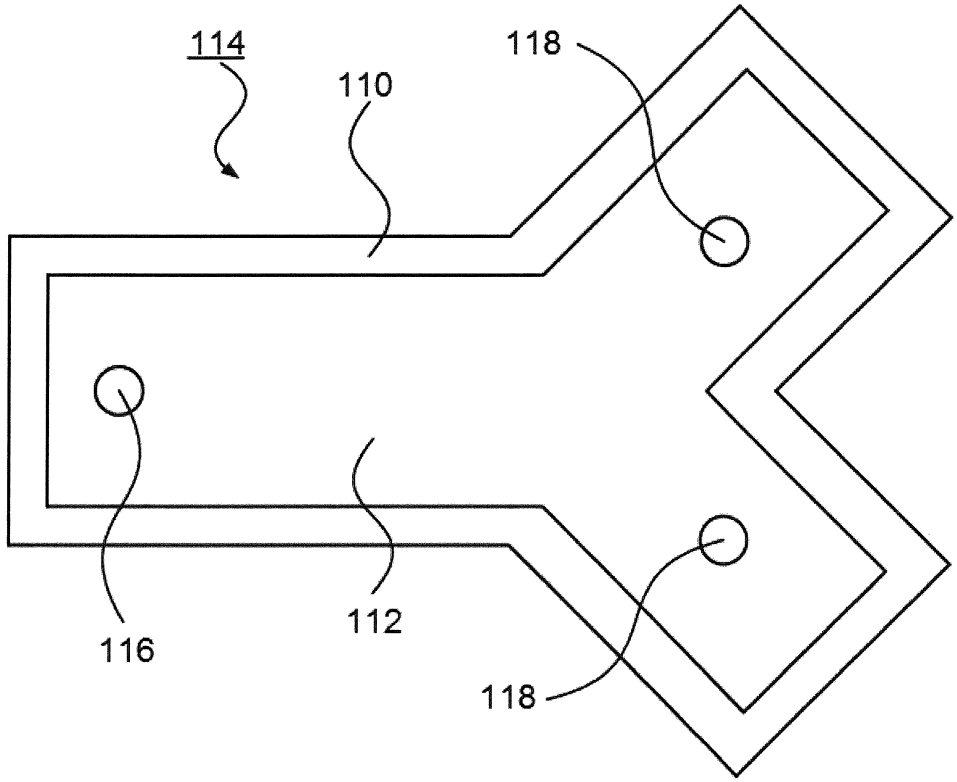

FIG. 6

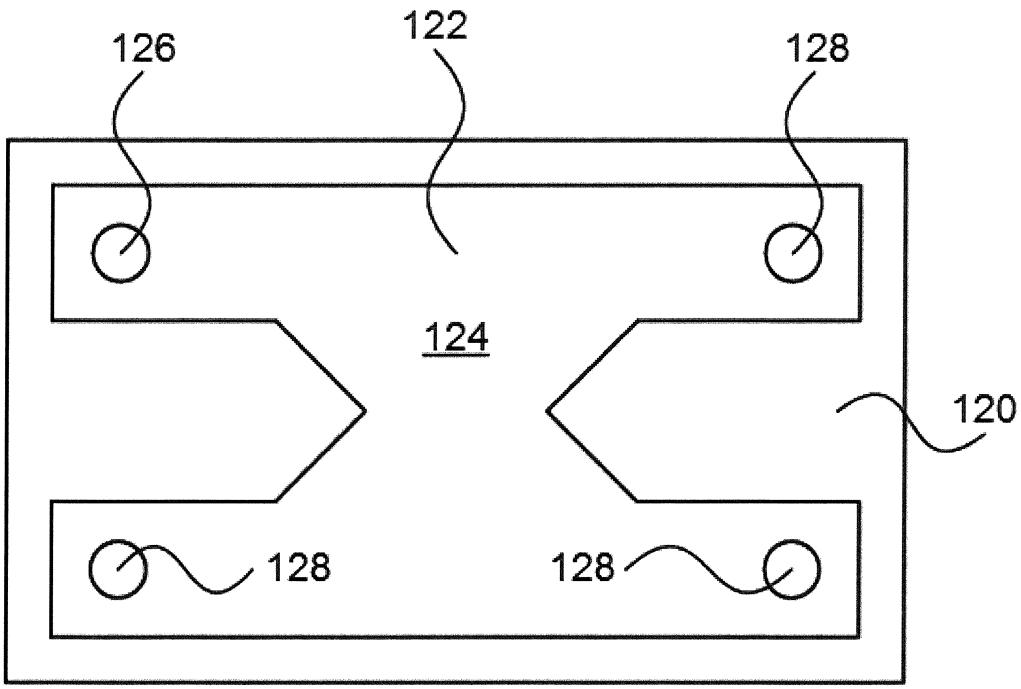

FIG. 7

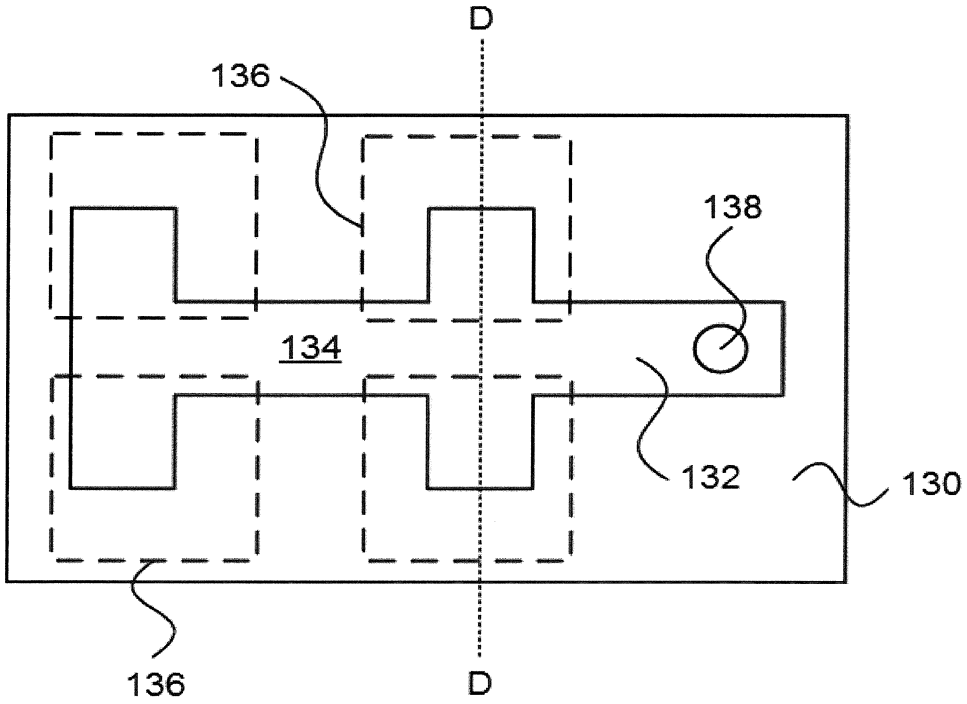

FIG. 8A

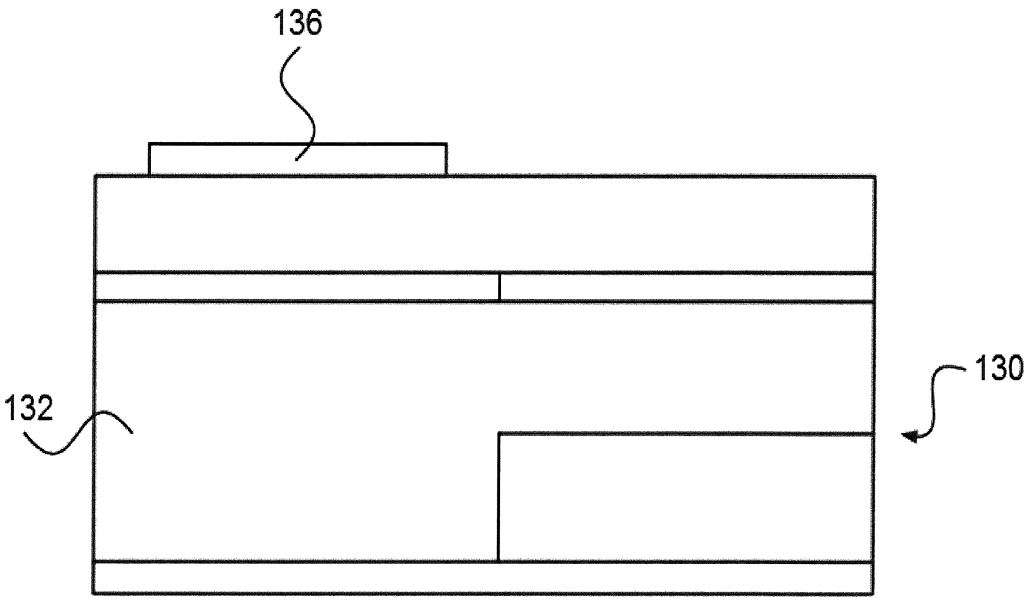

FIG. 8B

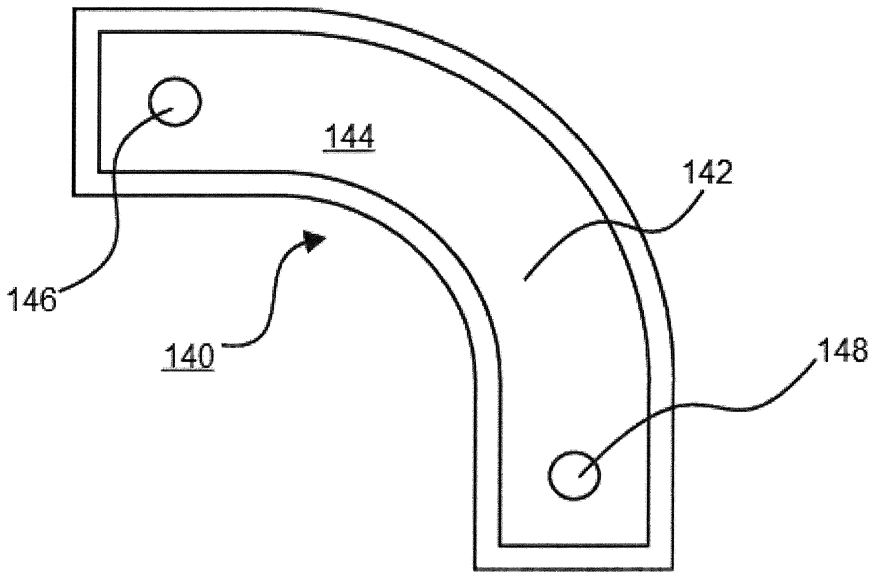

FIG. 9

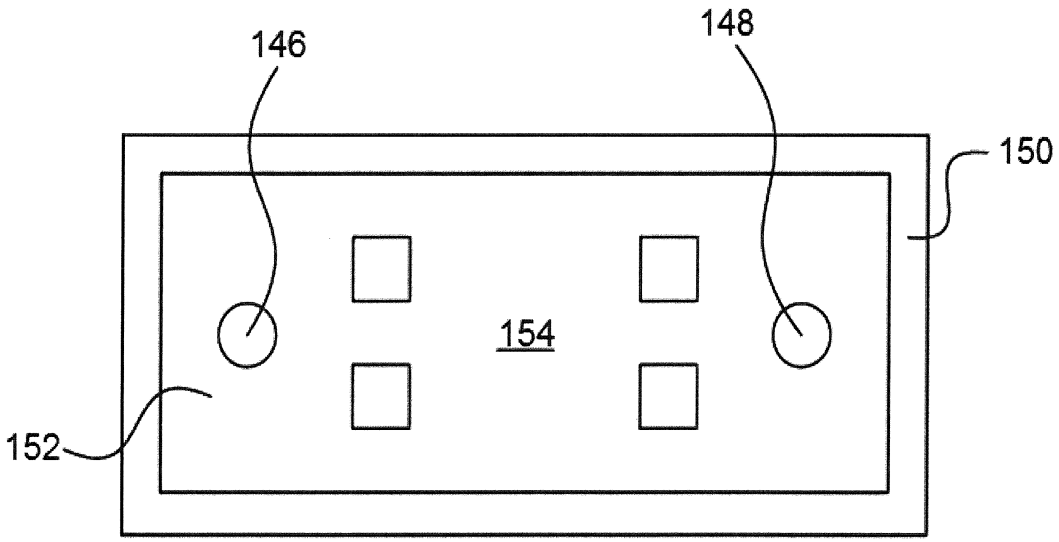

FIG. 10

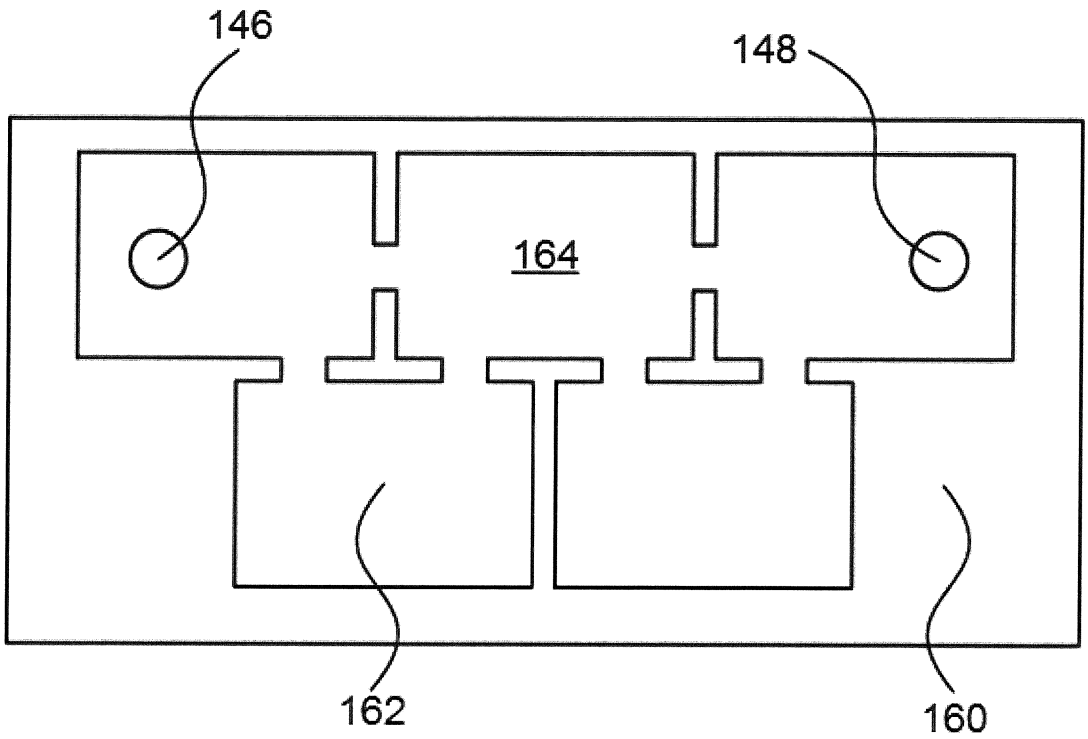

FIG. 11A

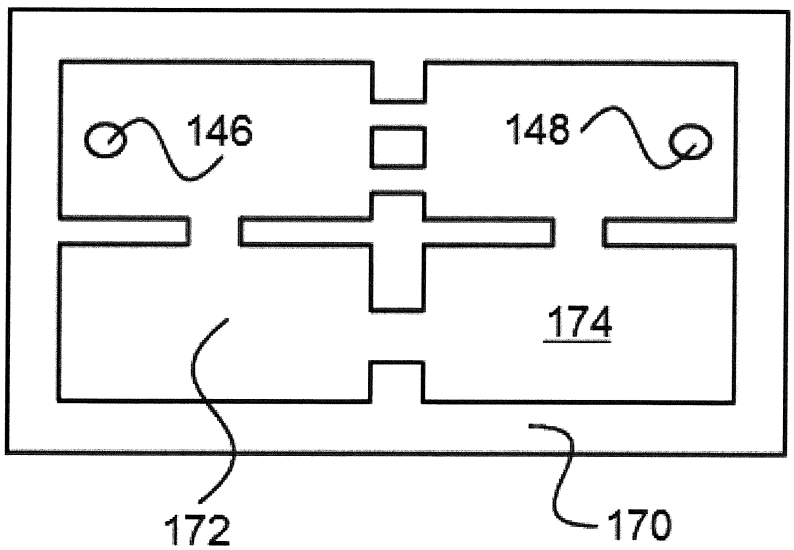

FIG. 11B

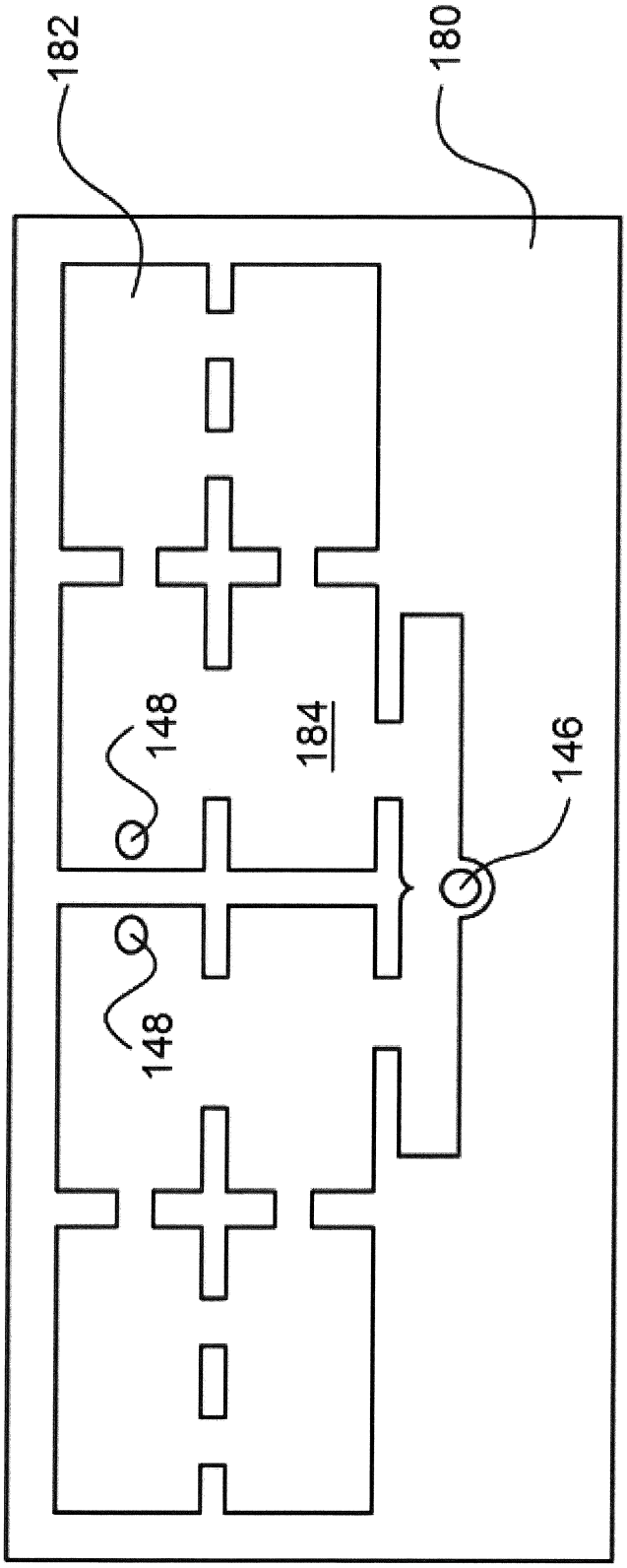

FIG. 12

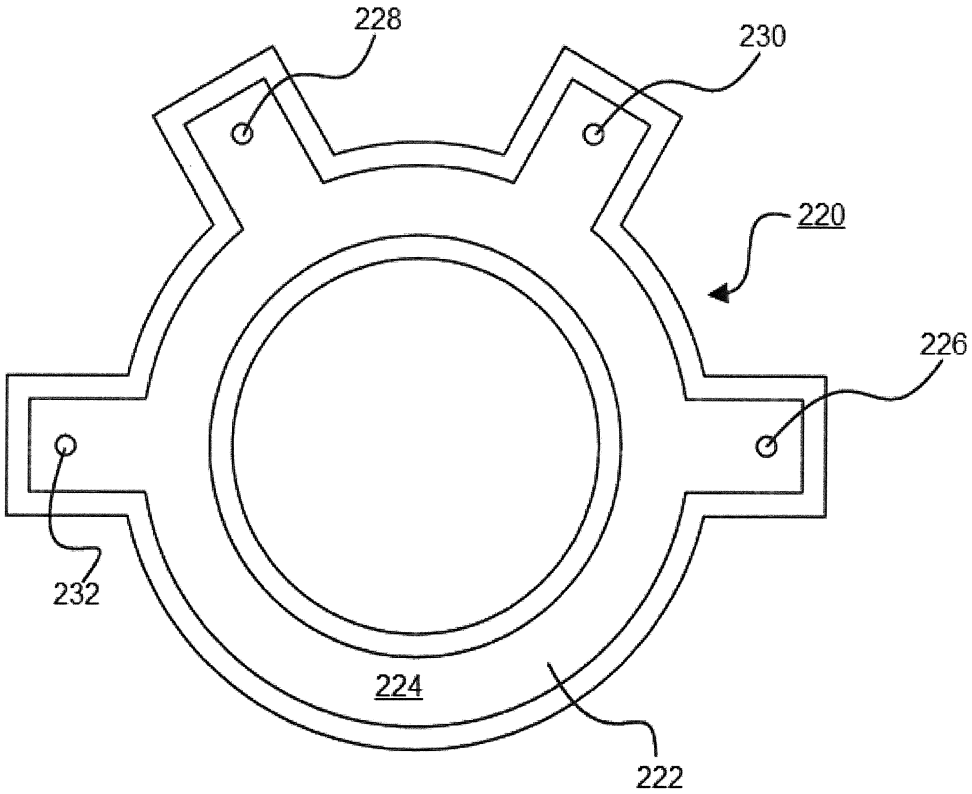

FIG. 13

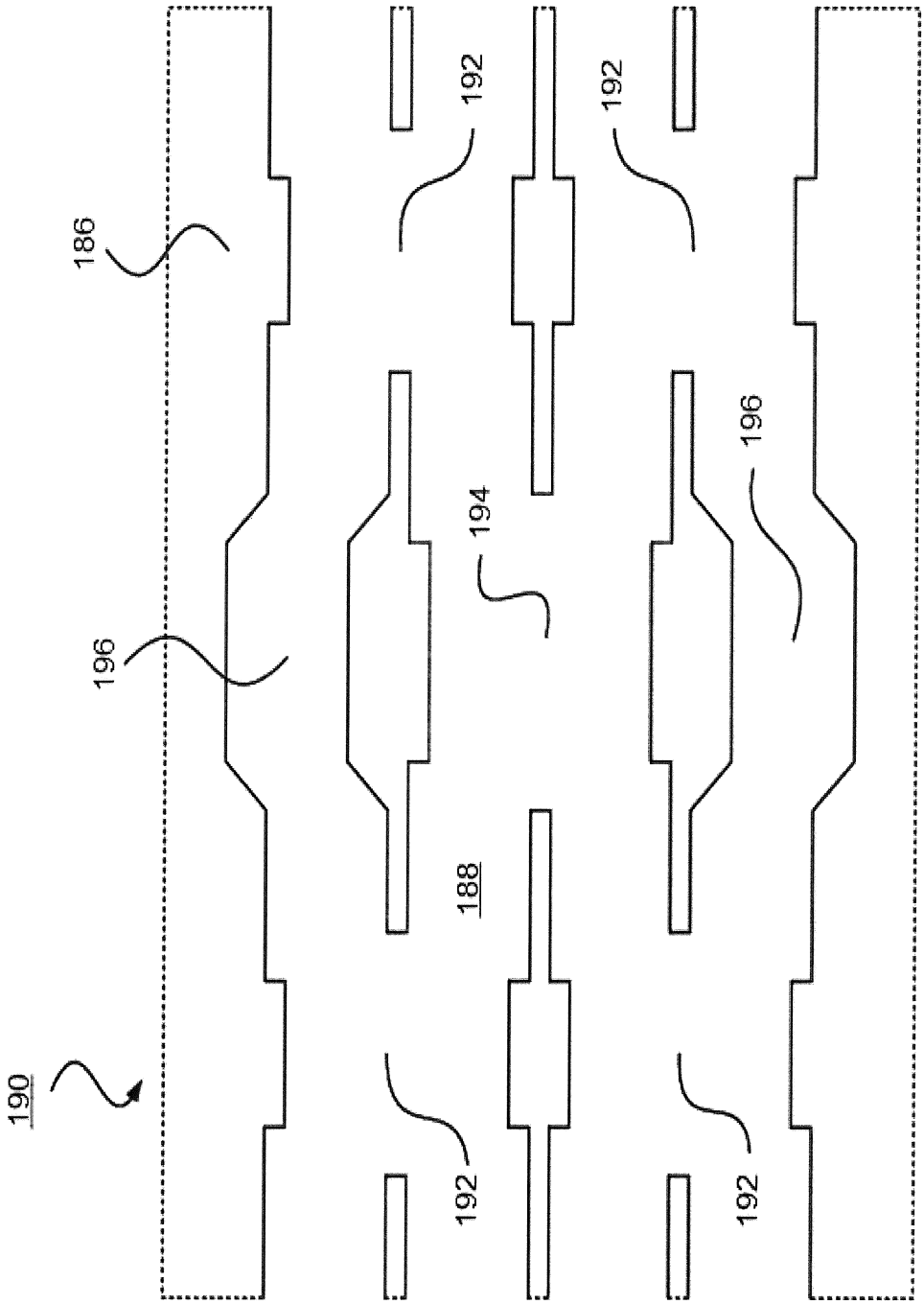

FIG. 14

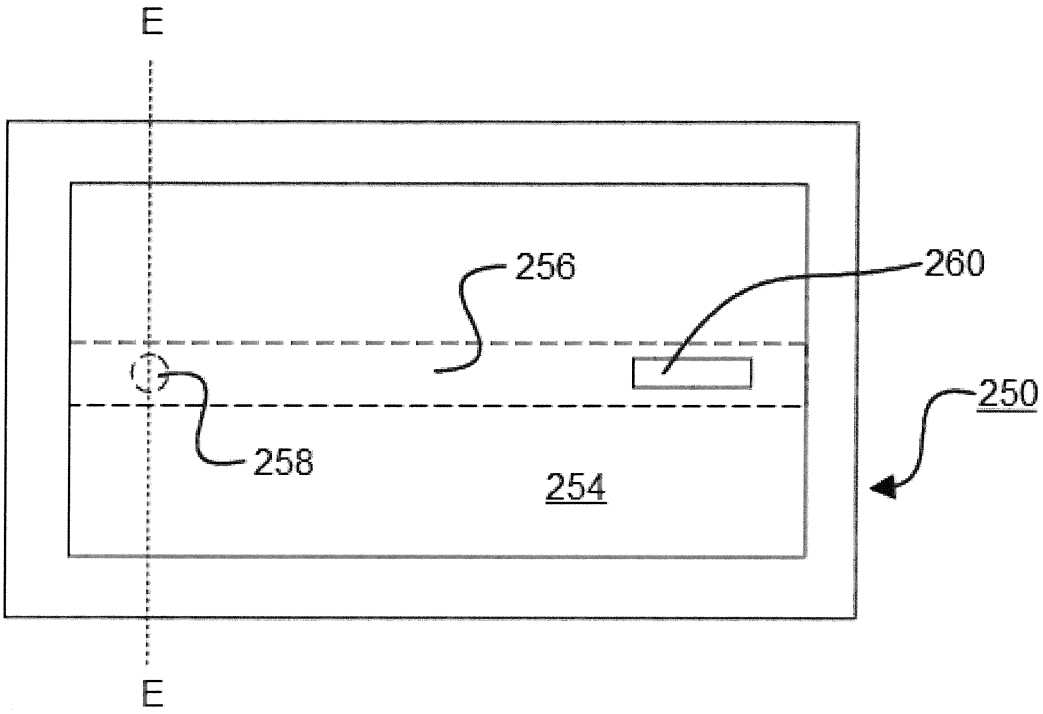

FIG. 15A

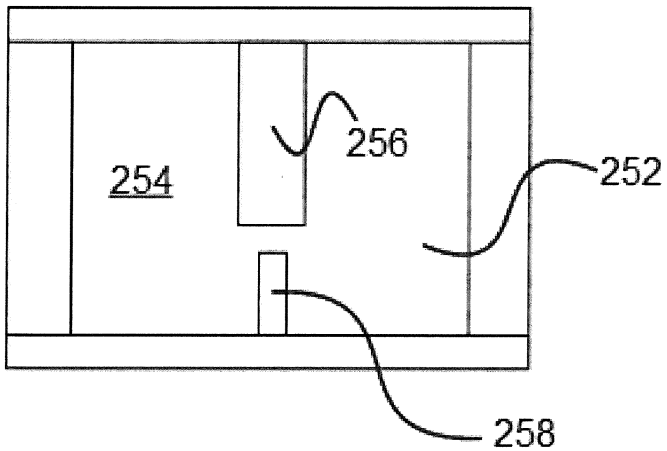

FIG. 15B