(12) INTERNATIONAL APPLICATION PUBLISHED UNDER THE PATENT COOPERATION TREATY (PCT)

(19) World Intellectual Property Organization
International Bureau

(43) International Publication Date
3 April 2014 (03.04.2014)

WIPO | PCT

(10) International Publication Number
WO 2014/049053 A1

(51) International Patent Classification:
G01M 11/02 (2006.01)

(21) International Application Number:
PCT/EP2013/070067

(22) International Filing Date:
26 September 2013 (26.09.2013)

(25) Filing Language: English

(26) Publication Language: English

(30) Priority Data:
61/707,225 28 September 2012 (28.09.2012) US

(71) Applicant: **NOVARTIS AG** [CH/CH]; Lichtstrasse 35, CH-4056 Basel (CH).

(72) Inventors: **FECHNER, Susanne**; Emilienstrasse 34, 63743 Aschaffenburg (DE). **BIEL, Roger**; Beethovenstrasse 4a, 63743 Aschaffenburg (DE).

(74) Agent: **BOHEST AG**; P.O. Box 160, CH-4003 Basel (CH).

(81) Designated States *(unless otherwise indicated, for every kind of national protection available)*: AE, AG, AL, AM, AO, AT, AU, AZ, BA, BB, BG, BH, BN, BR, BW, BY, BZ, CA, CH, CL, CN, CO, CR, CU, CZ, DE, DK, DM, DO, DZ, EC, EE, EG, ES, FI, GB, GD, GE, GH, GM, GT, HN, HR, HU, ID, IL, IN, IS, JP, KE, KG, KN, KP, KR, KZ, LA, LC, LK, LR, LS, LT, LU, LY, MA, MD, ME, MG, MK, MN, MW, MX, MY, MZ, NA, NG, NI, NO, NZ, OM, PA, PE, PG, PH, PL, PT, QA, RO, RS, RU, RW, SA, SC, SD, SE, SG, SK, SL, SM, ST, SV, SY, TH, TJ, TM, TN, TR, TT, TZ, UA, UG, US, UZ, VC, VN, ZA, ZM, ZW.

(84) Designated States *(unless otherwise indicated, for every kind of regional protection available)*: ARIPO (BW, GH, GM, KE, LR, LS, MW, MZ, NA, RW, SD, SL, SZ, TZ, UG, ZM, ZW), Eurasian (AM, AZ, BY, KG, KZ, RU, TJ, TM), European (AL, AT, BE, BG, CH, CY, CZ, DE, DK, EE, ES, FI, FR, GB, GR, HR, HU, IE, IS, IT, LT, LU, LV, MC, MK, MT, NL, NO, PL, PT, RO, RS, SE, SI, SK, SM, TR), OAPI (BF, BJ, CF, CG, CI, CM, GA, GN, GQ, GW, KM, ML, MR, NE, SN, TD, TG).

[Continued on next page]

(54) Title: METHOD FOR AUTOMATED INLINE DETERMINATION OF THE REFRACTIVE POWER OF AN OPHTHALMIC LENS

(57) Abstract: A method for an automated inline determination of the refractive power of an ophthalmic lens (5) comprises the steps of providing an inspection cuvette comprising an optically transparent bottom (21) having a concave inner surface (210) and containing the ophthalmic lens (5) immersed in a liquid, and providing a light source (42) and a wavefront sensor (6) comprising a detector. The light coming from the light source (42) and having passed the ophthalmic lens (5) contained in the inspection cuvette and impinging on the detector generates signals at the detector. By comparing the signals generated at the detector with predetermined signals representative of a reference refractive power, the refractive power of the ophthalmic lens (5) is thereby determined.

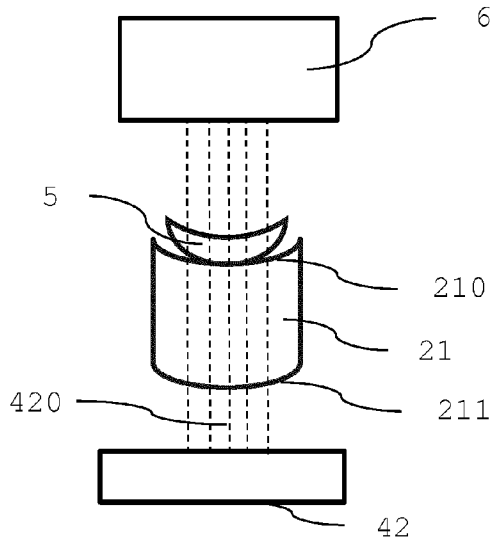

Fig. 3

WO 2014/049053 A1

Published:

— *with international search report (Art. 21(3))*

— *before the expiration of the time limit for amending the claims and to be republished in the event of receipt of amendments (Rule 48.2(h))*