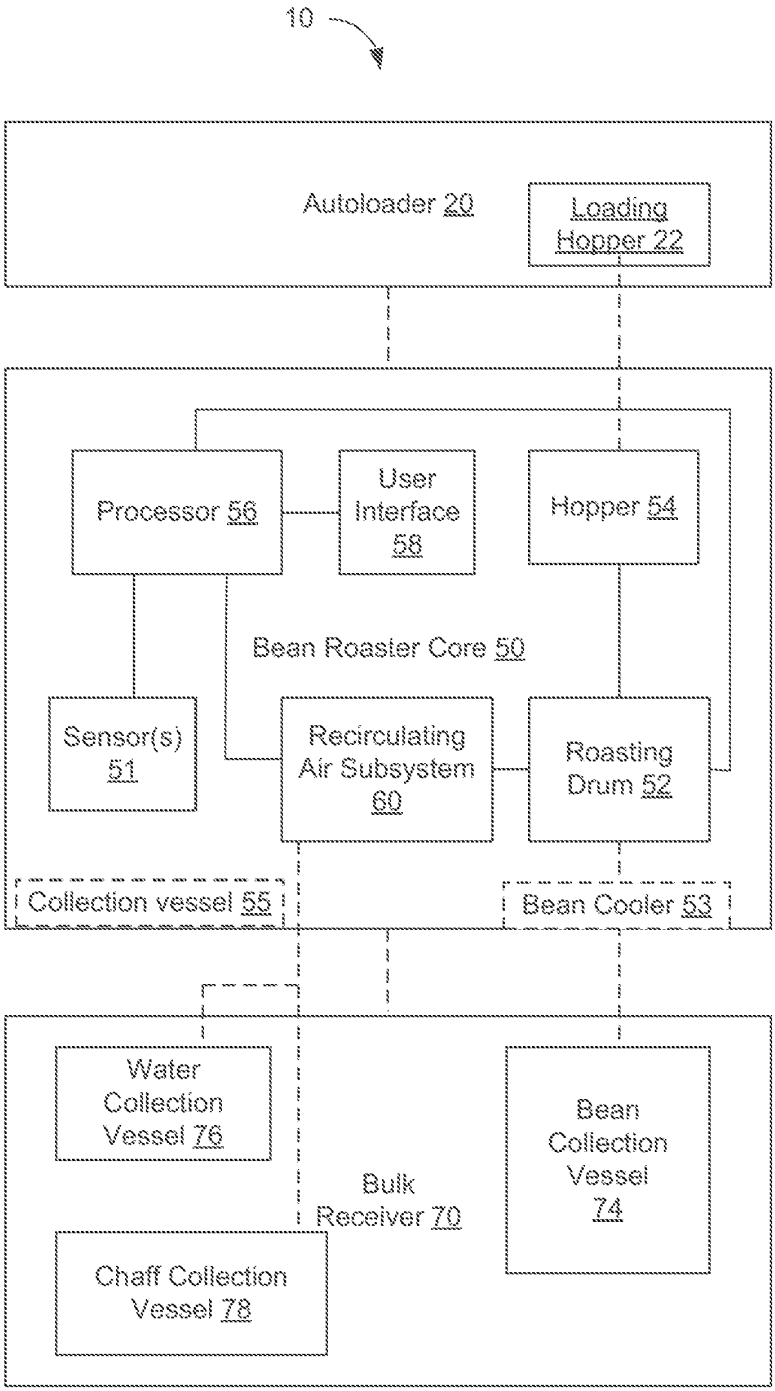
10
Autoloader 20
Loading Hopper 22
Processor 56
User Interface 58
Hopper 54
Bean Roaster Core 50
Sensor(s) 51
Recirculating Air Subsystem 60
Roasting Drum 52
Collection vessel 55
Bean Cooler 53
Water Collection Vessel 76
Bulk Receiver 70
Bean Collection Vessel 74
Chaff Collection Vessel 78

FIG. 1

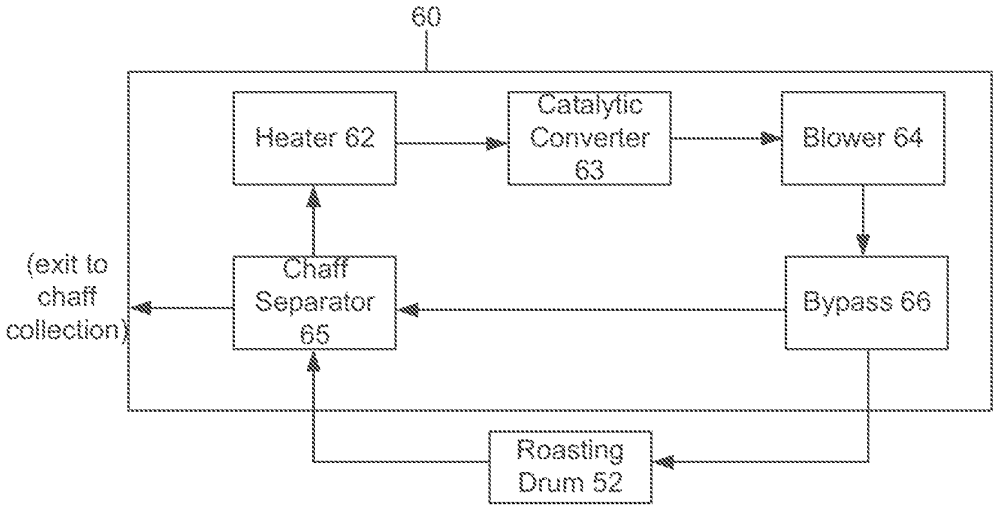
60
Heater 62
Catalytic Converter 63
Blower 64
(exit to chaff collection)
Chaff Separator 65
Bypass 66
Roasting Drum 52

FIG. 2

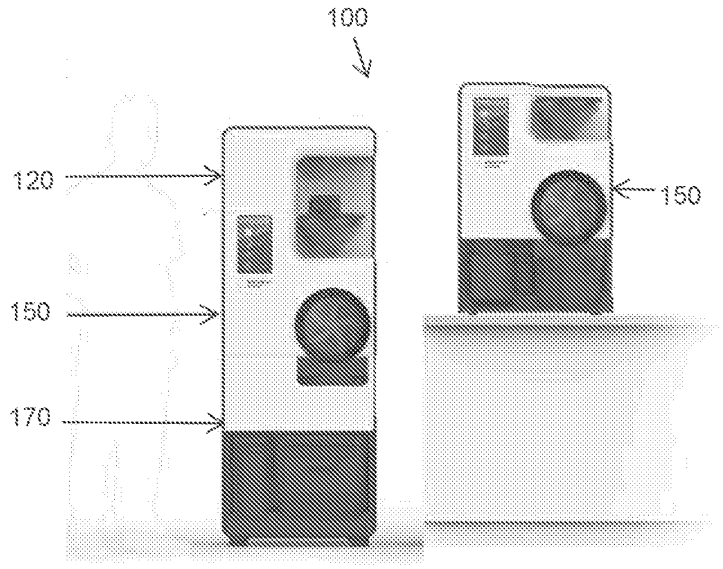

FIG. 3

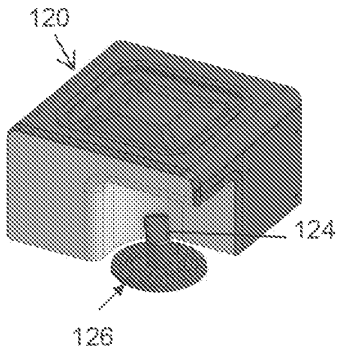

FIG. 4

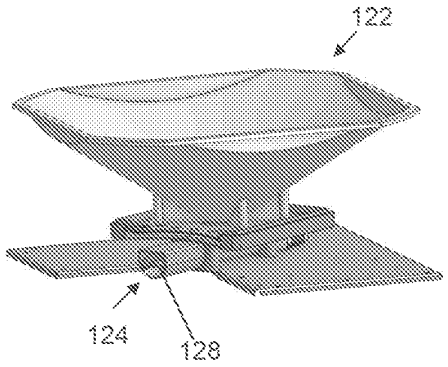

FIG. 5

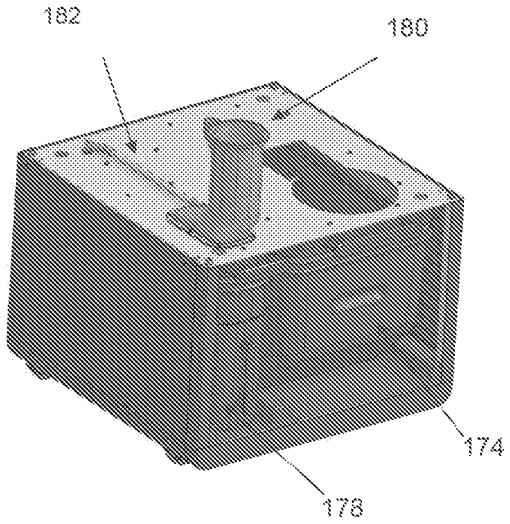

FIG. 6

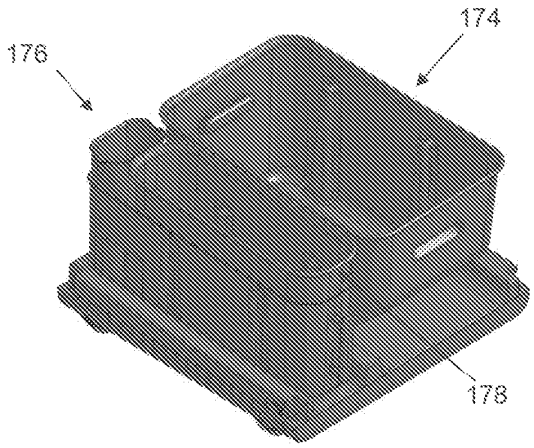

FIG. 7

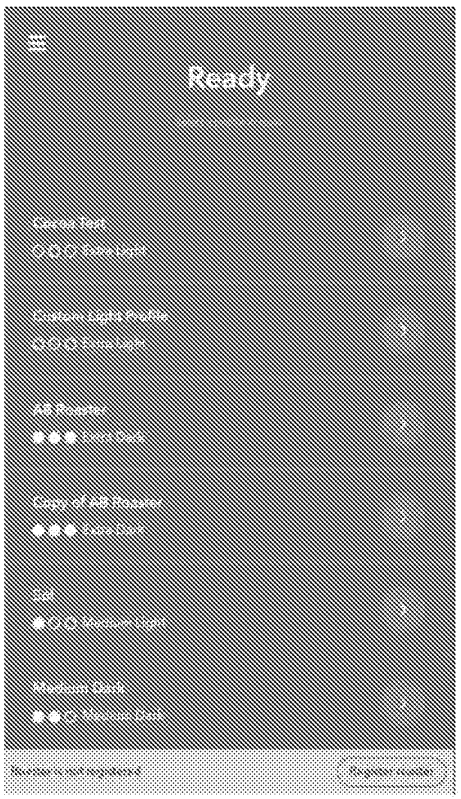

FIG. 8

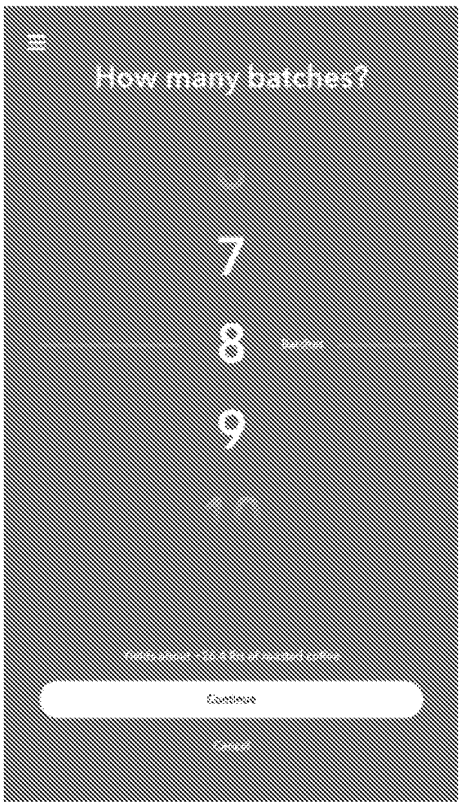

FIG. 9

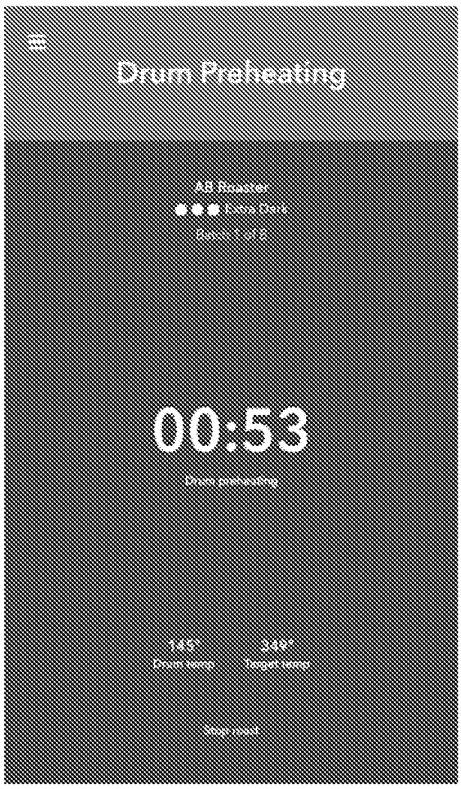
Drum Preheating
AB Roaster
Extra Dark
00:53
Drum preheating
145°
Drum temp
349°
Target temp
Stop roast

FIG. 10

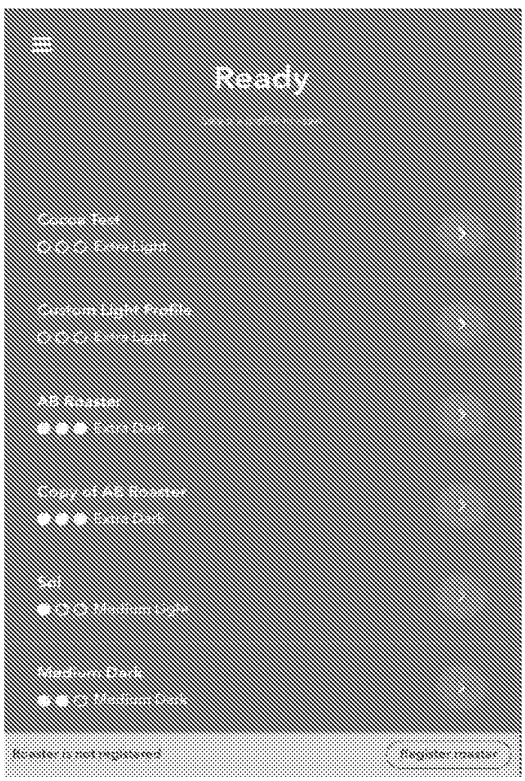
Ready
Cocoa Test
Extra Light
Custom Light Profile
Extra Light
AB Roaster
Extra Dark
Copy of AB Roaster
Extra Dark
Sol
Medium Light
Medium Dark
Medium Dark
Roaster is not registered
Register roaster

FIG. 11

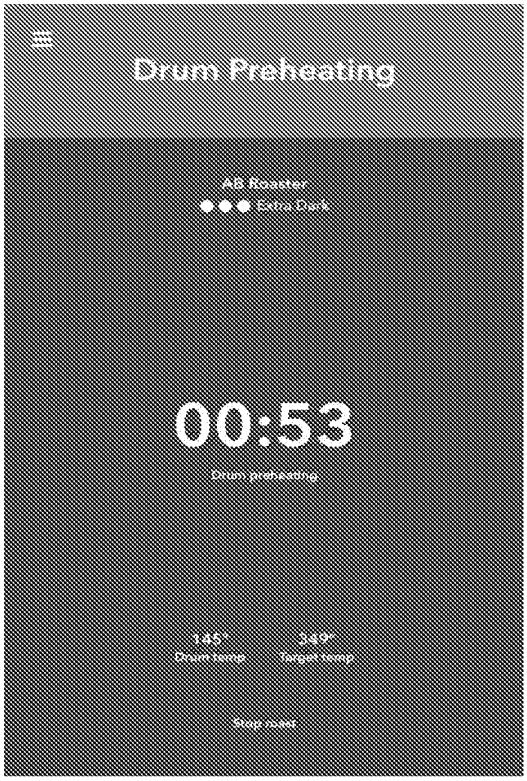
Drum Preheating
AB Roaster
Extra Dark
00:53
Drum preheating
145°
Drum temp
349°
Target temp
Stop roast

FIG. 12

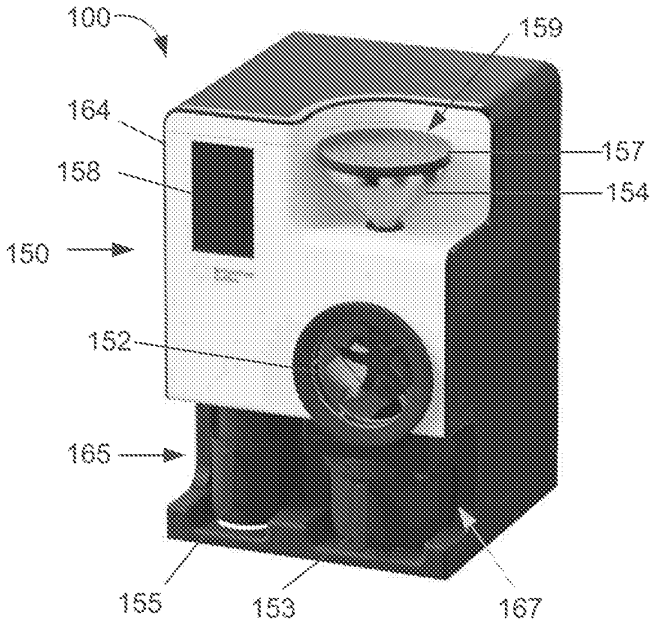
100
159
164
157
158
154
150
152
165
155
153
167

FIG. 13

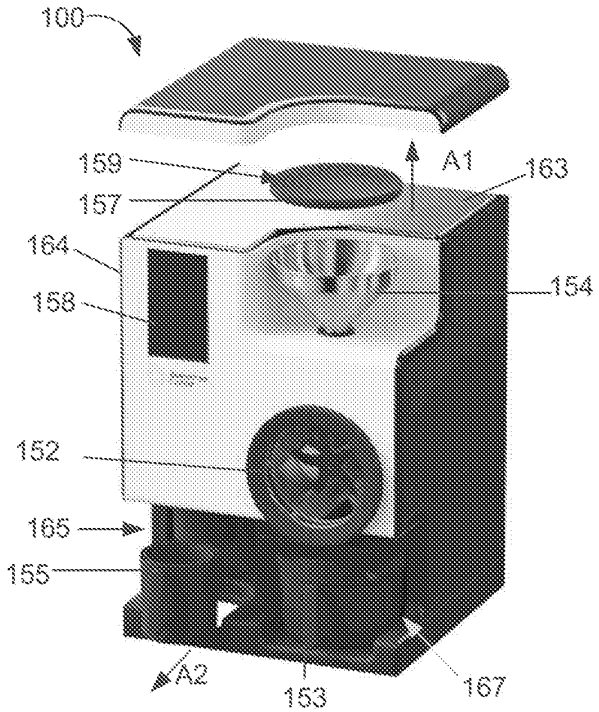
100
159
A1
163
157
164
154
158
152
165
155
A2
153
167

FIG. 14

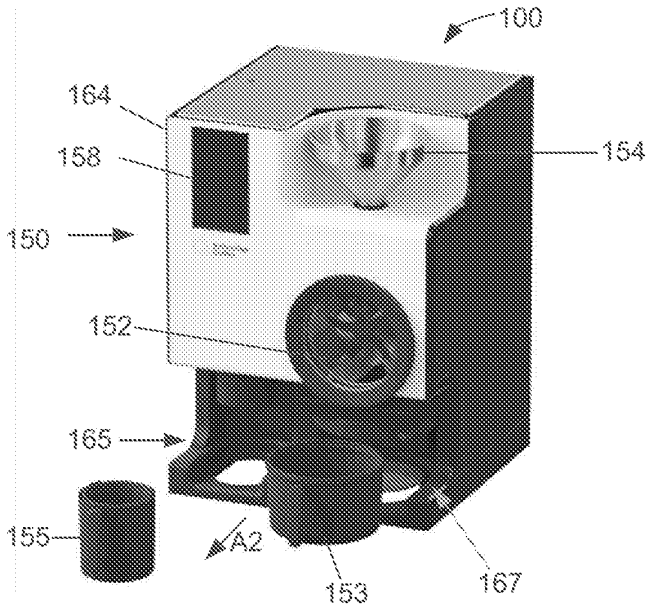
100
164
158
154
150
152
165
155
A2
153
167

FIG. 15

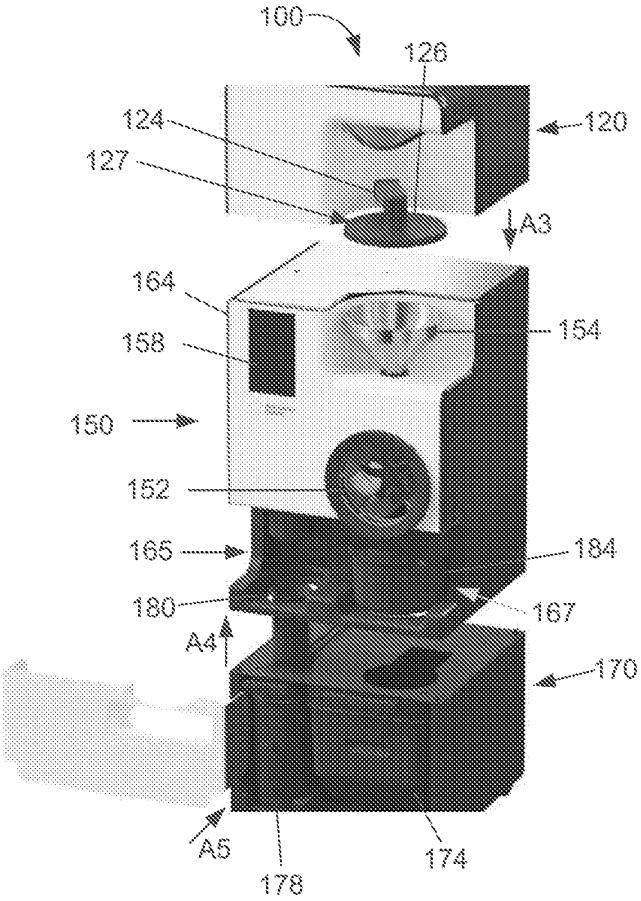
100
126
124
120
127
A3
164
154
158
150
152
165
184
180
167
A4
170
A5
178
174

FIG. 16

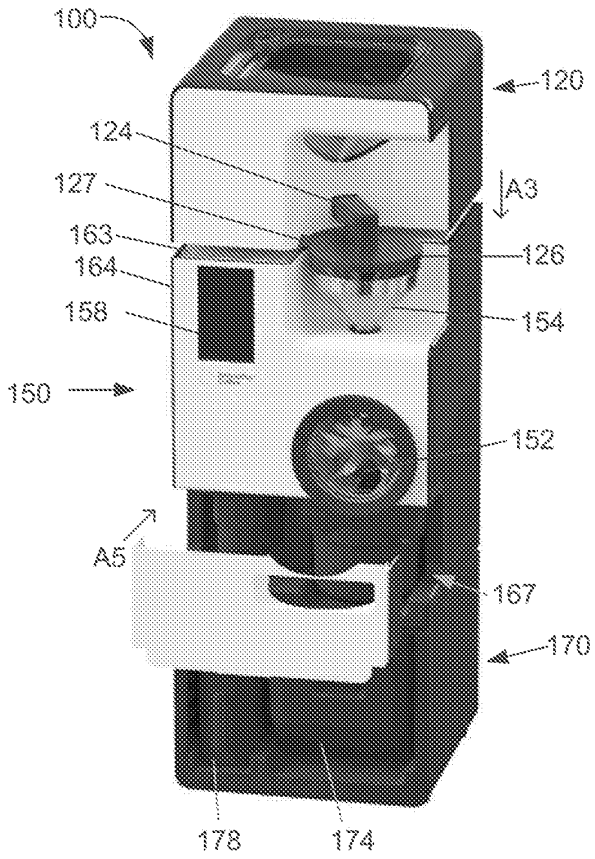
100
120
124
127
A3
163
126
164
158
154
150
152
A5
167
170
178
174

FIG. 17

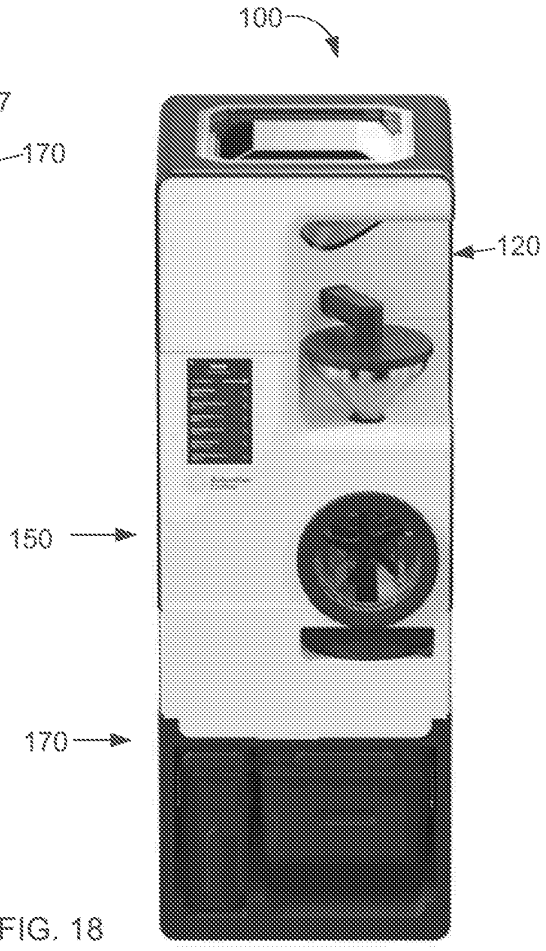
100
120
150
170

FIG. 18