ABSTRACT

An intelligent trash can includes a closing and packing mechanism for automatic closing of a garbage bag. The closing and packing mechanism include a pair of first pressing rods and a second pressing rod. The pair of first pressing rods are configured for being synchronously approached or synchronously moved away under the driving of a first belt transmission unit. The second pressing rod is perpendicular to the pair of first pressing rods. The second pressing rod is configured to perform linear reciprocating motion along a length direction of the pair of first pressing rods under the driving of the second belt transmission unit.

<Figure 1>

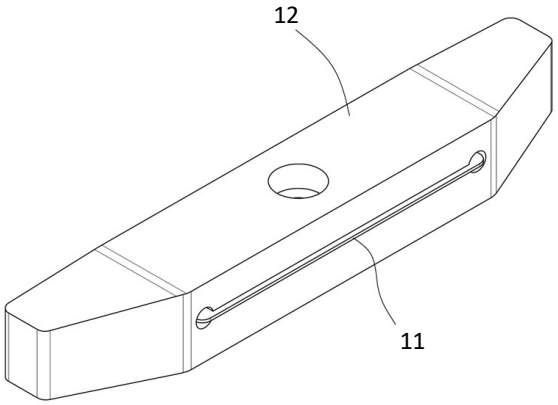

FIG. 1

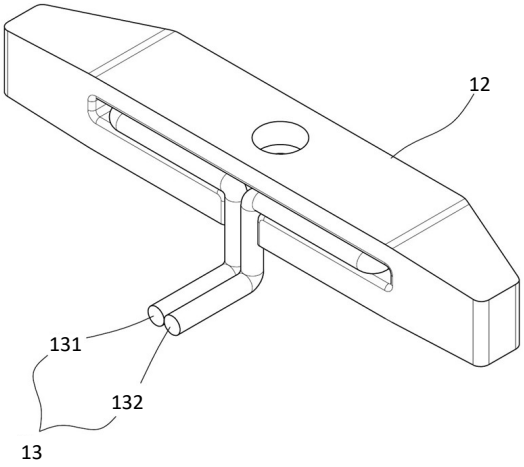

FIG. 2

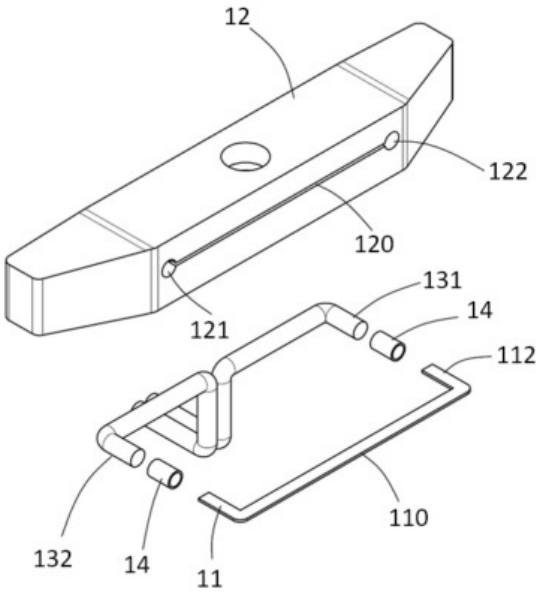

FIG. 3

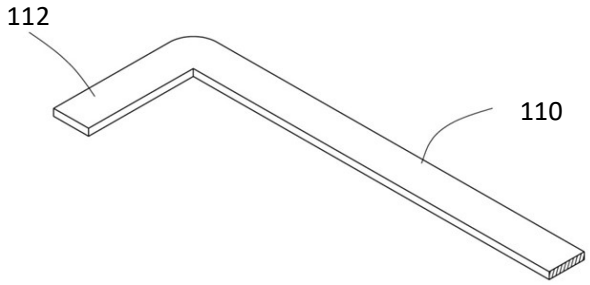

FIG. 4

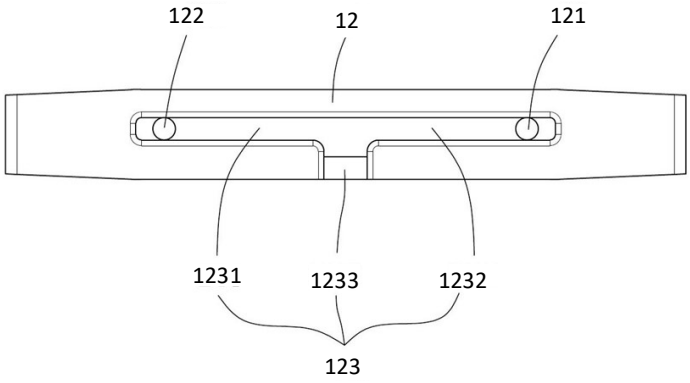

FIG. 5

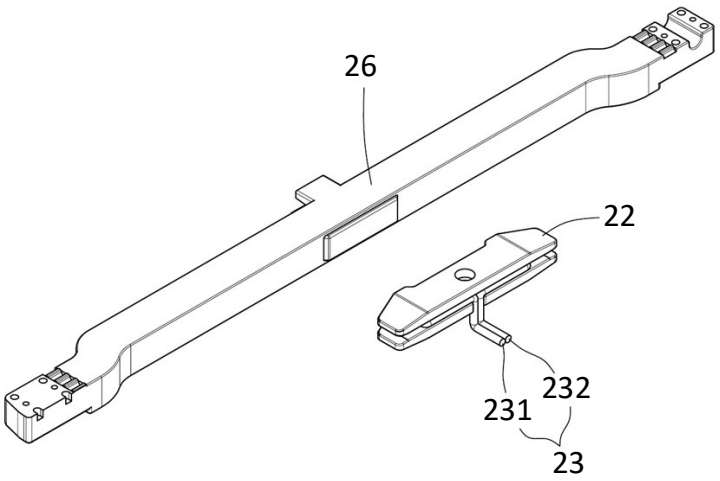

FIG. 6

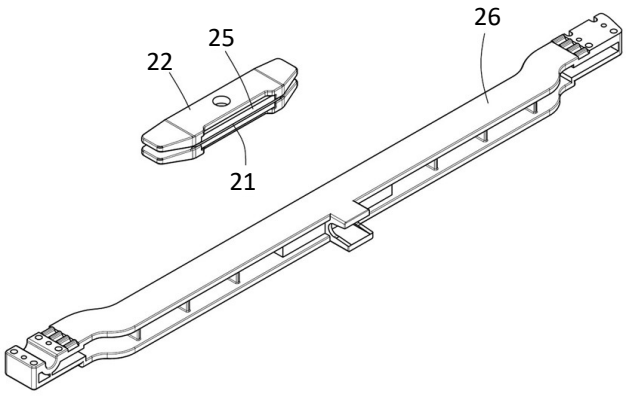

FIG. 7

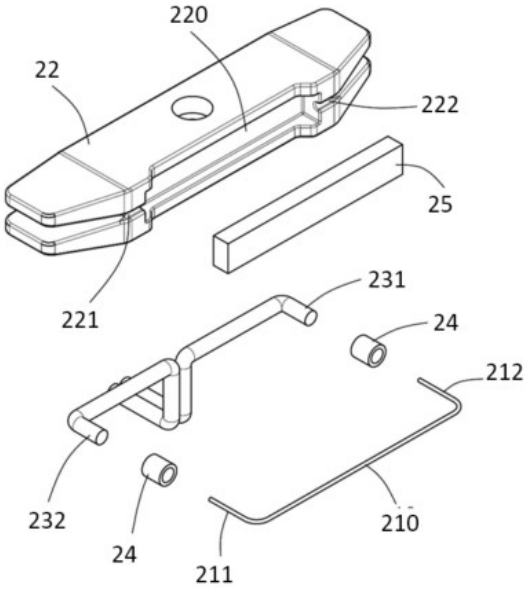

FIG. 8

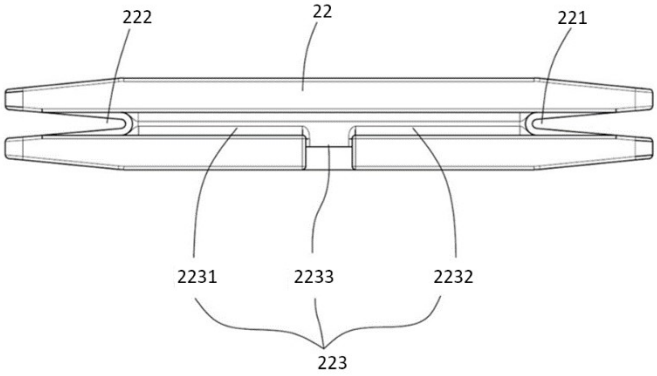

FIG. 9

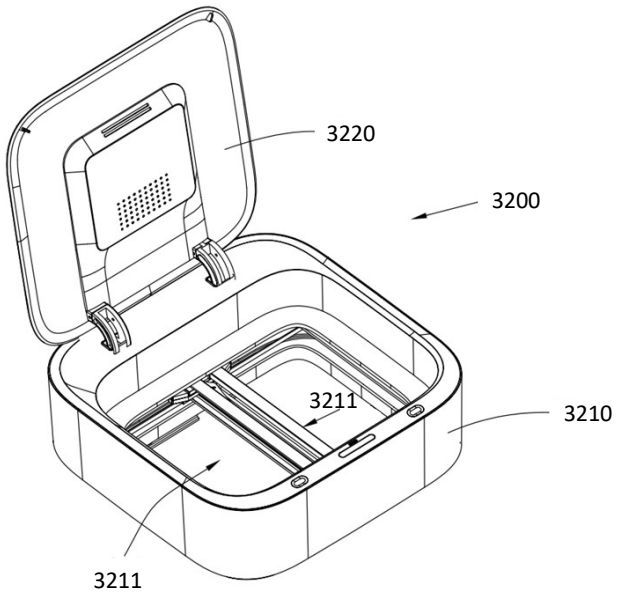
3220
3200
3211
3210
3211

FIG. 10

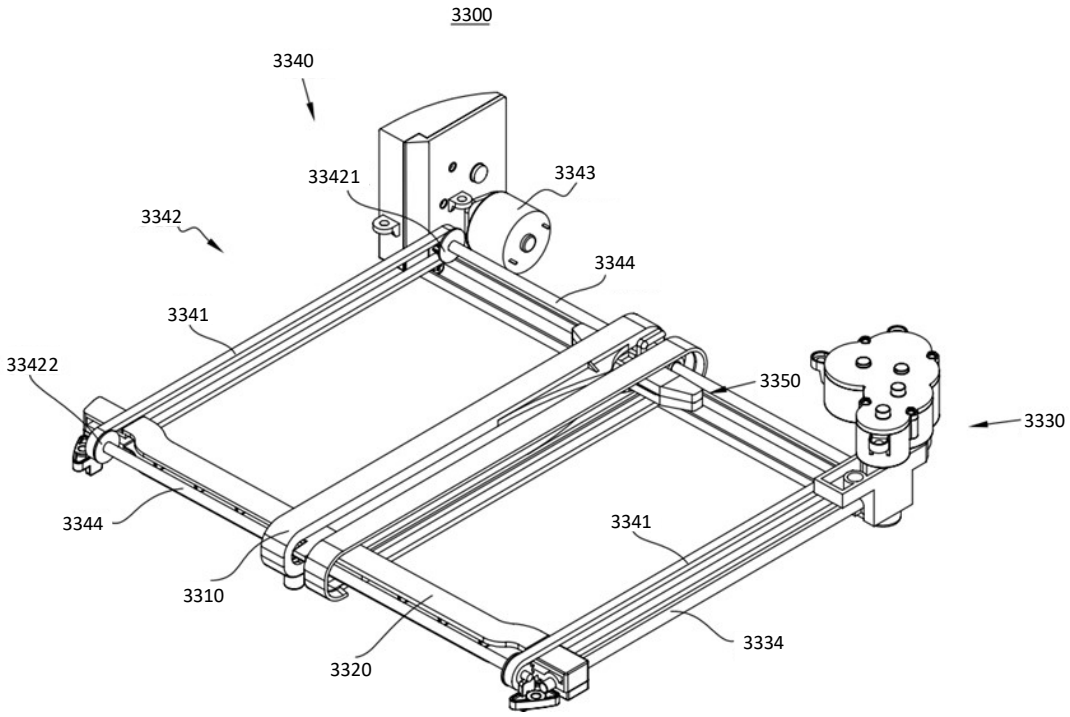
3300
3340
33421
3343
3342
3344
3341
33422
3350
3330
3344
3341
3310
3334
3320

FIG. 11

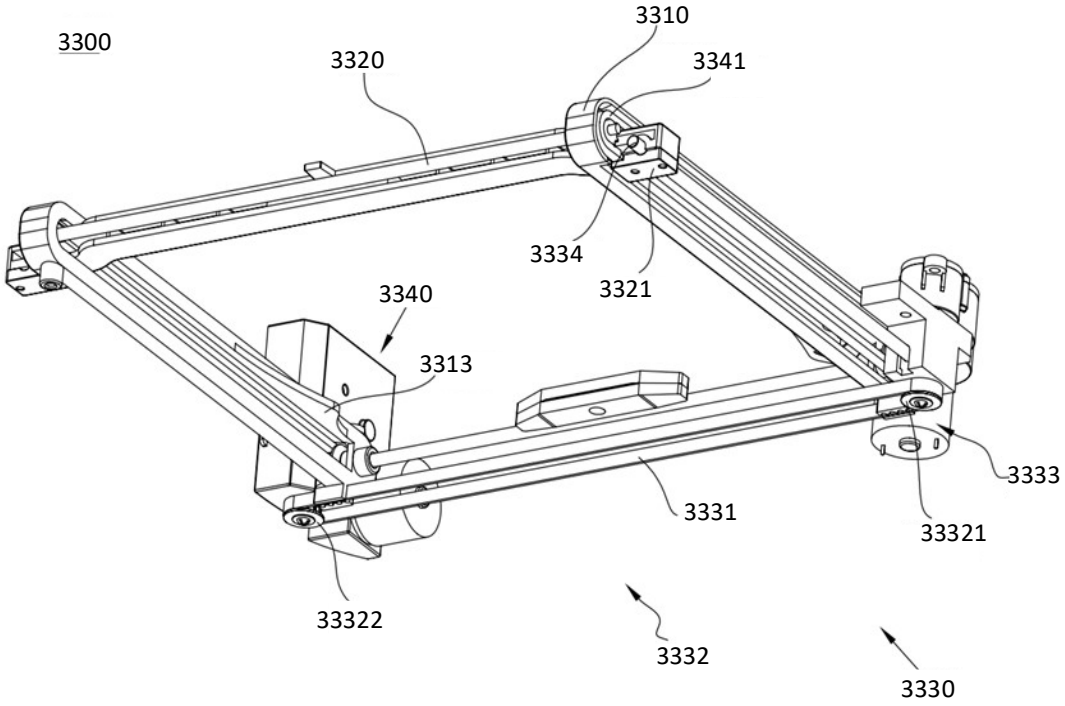

FIG. 12

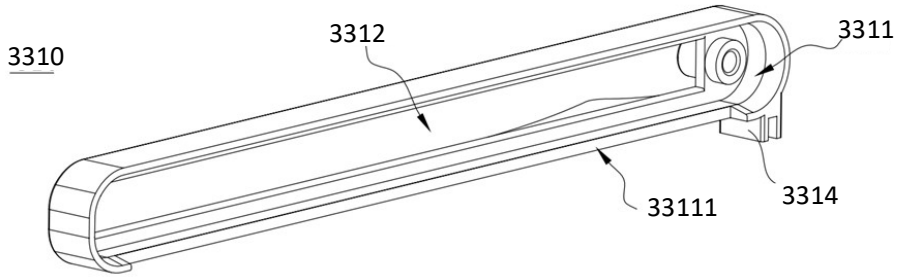

FIG. 13

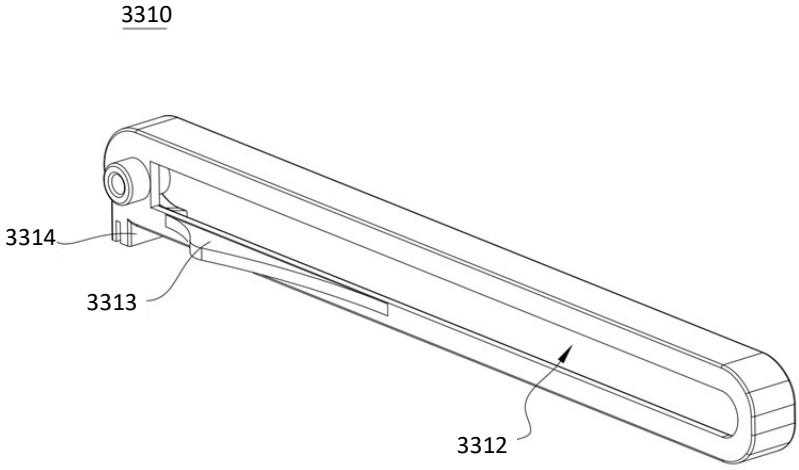

FIG. 14

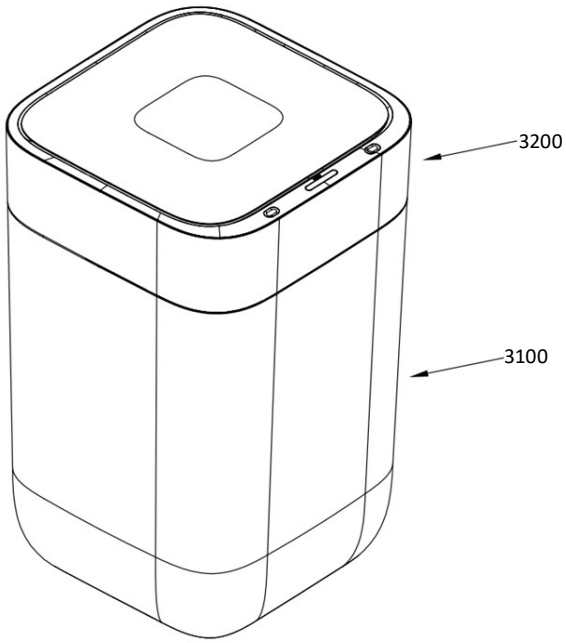

FIG. 15

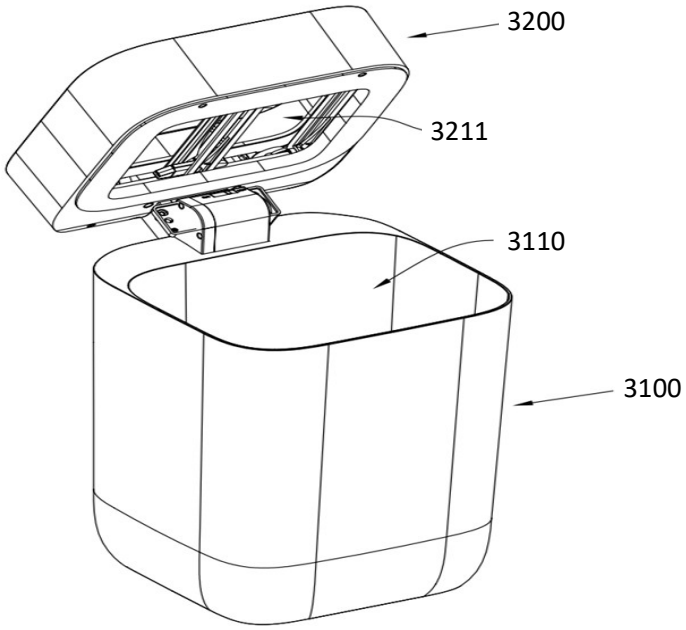

FIG. 16

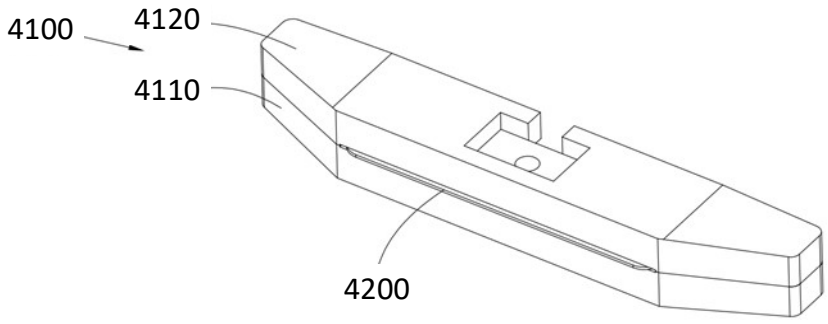

FIG. 17

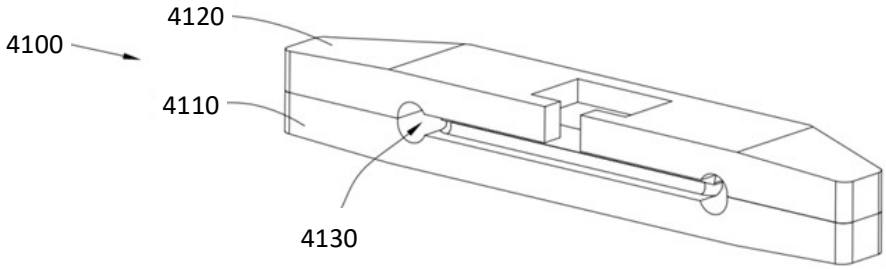

FIG. 18

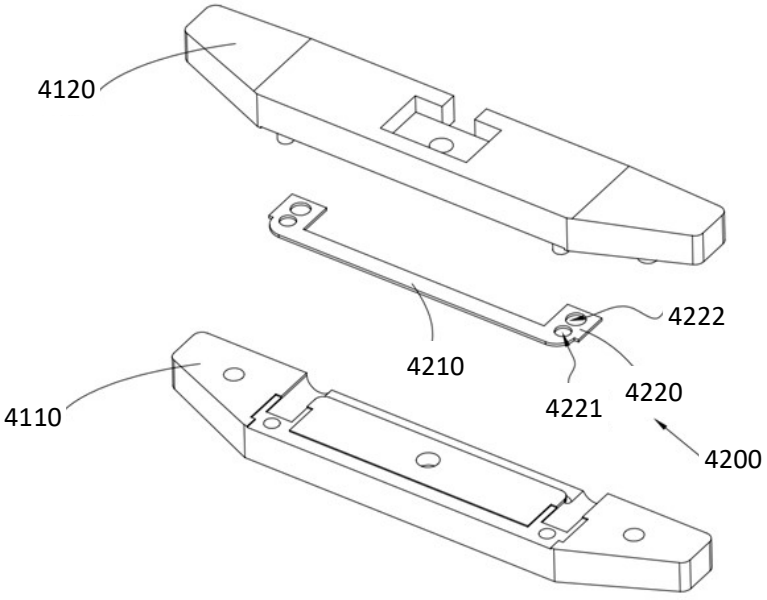

FIG. 19

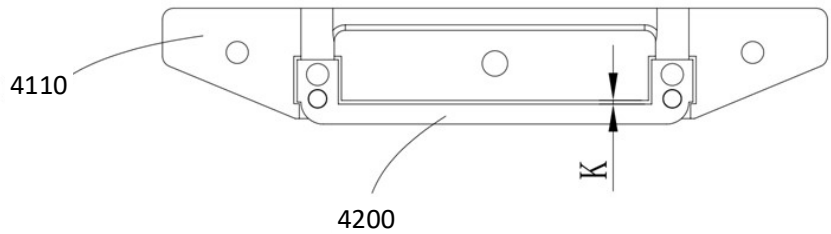

FIG. 20

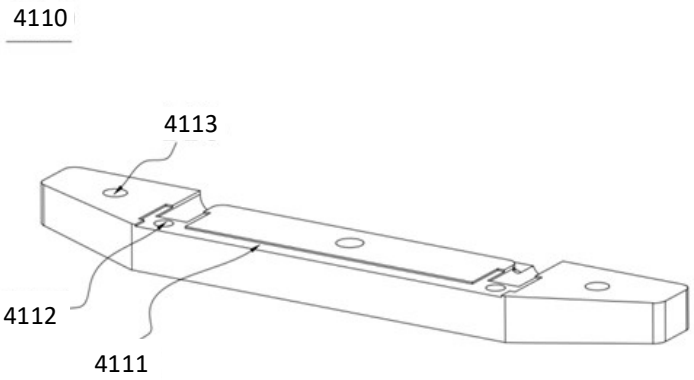

FIG. 21

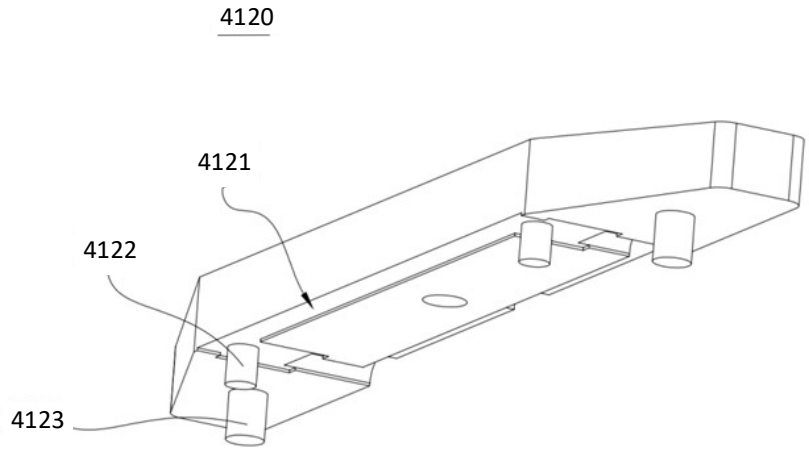

FIG. 22

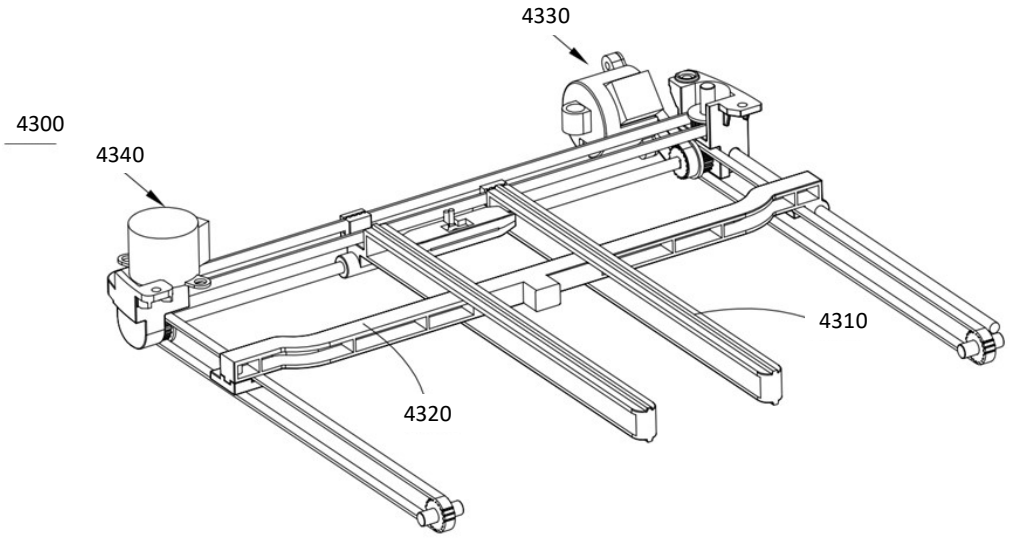

FIG. 23

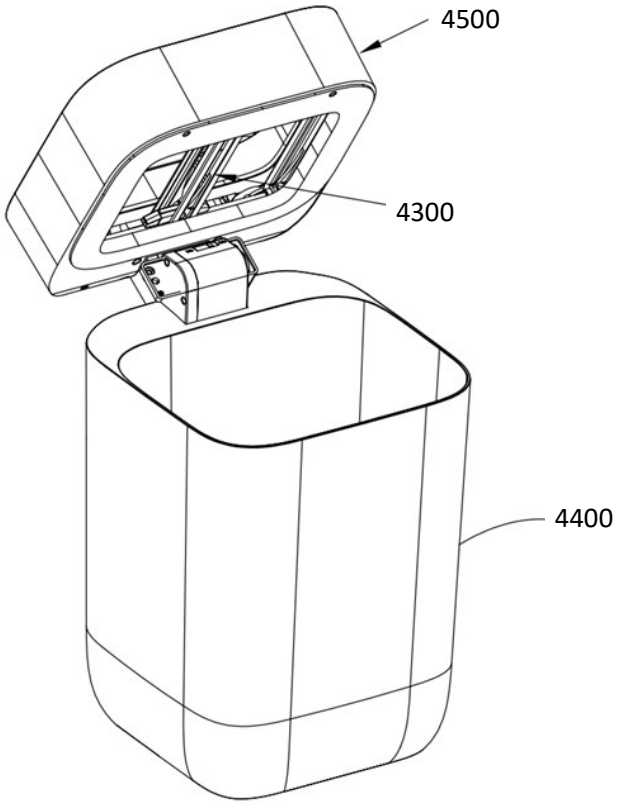

FIG. 24

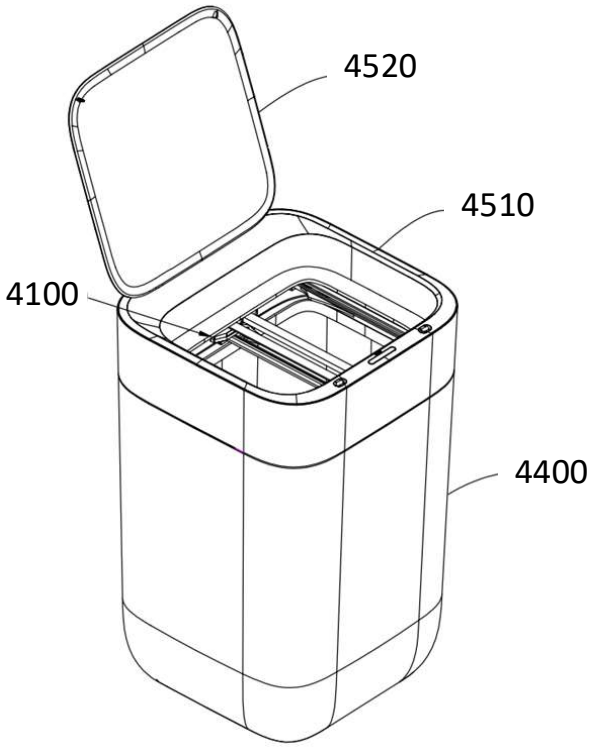

FIG. 25

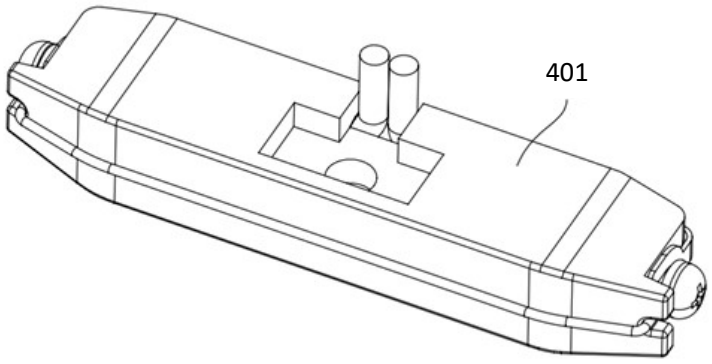

FIG. 26

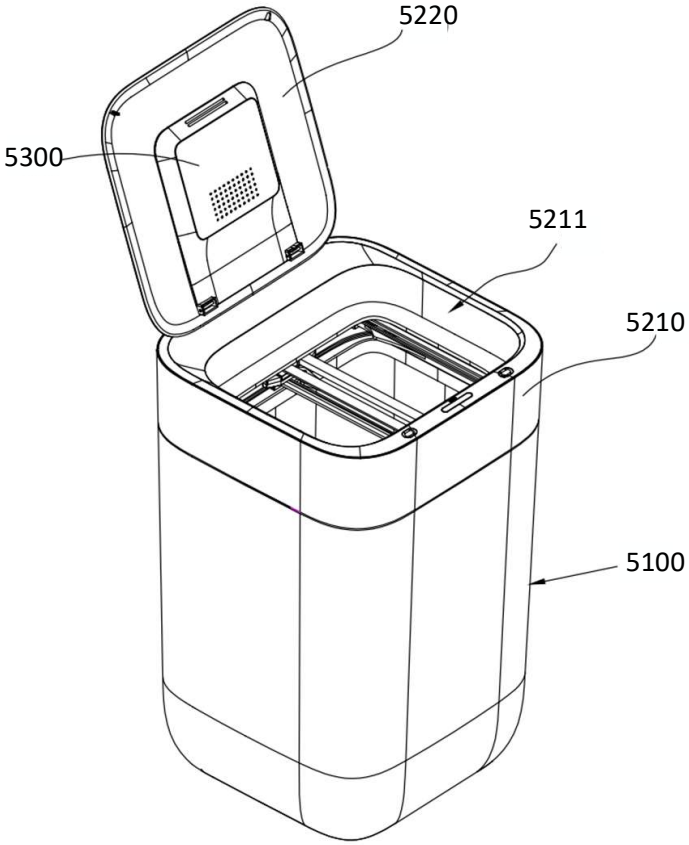

FIG. 27

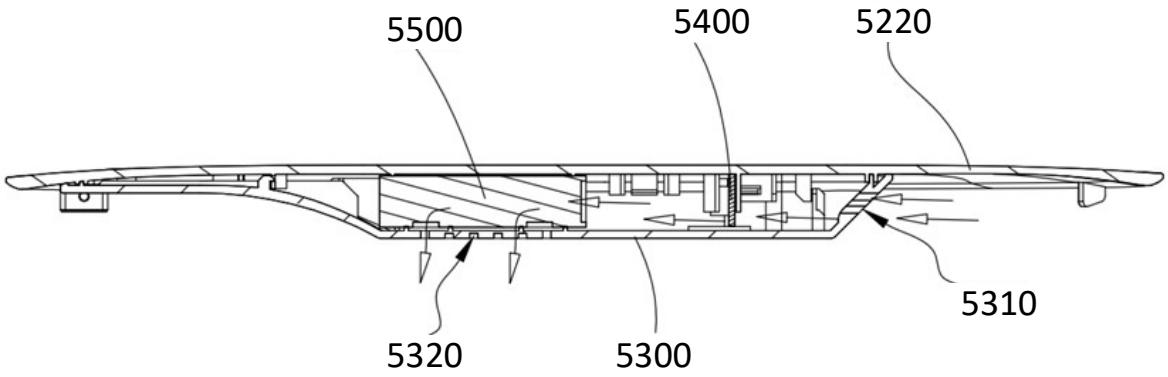
5500
5400
5220
5310
5320
5300

FIG. 28

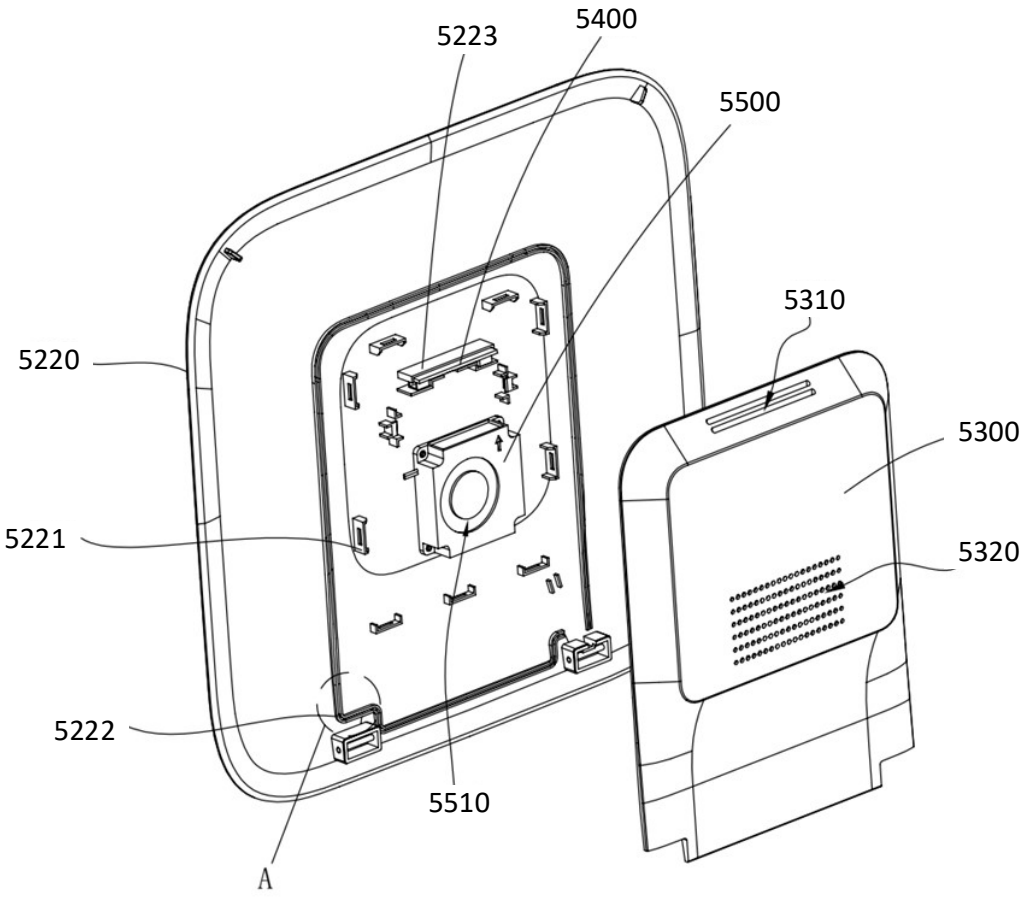
5223
5400
5500
5310
5220
5300
5221
5320
5222
5510
A

FIG. 29

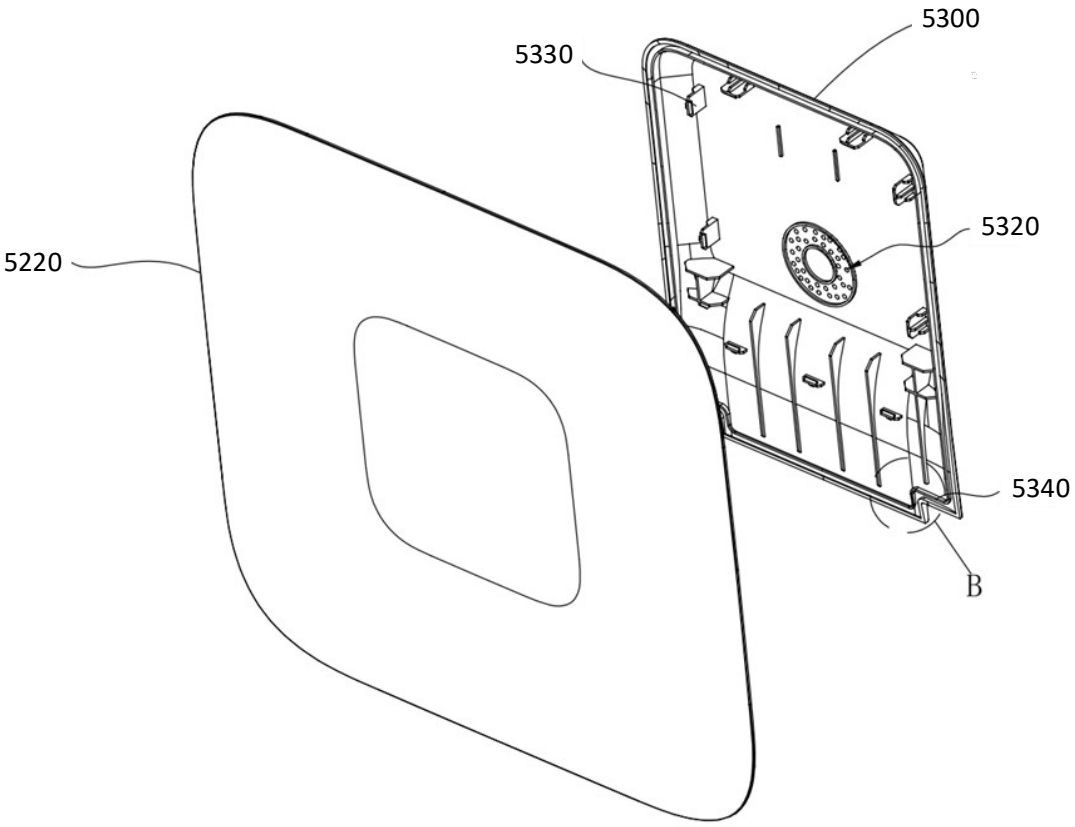

FIG. 30

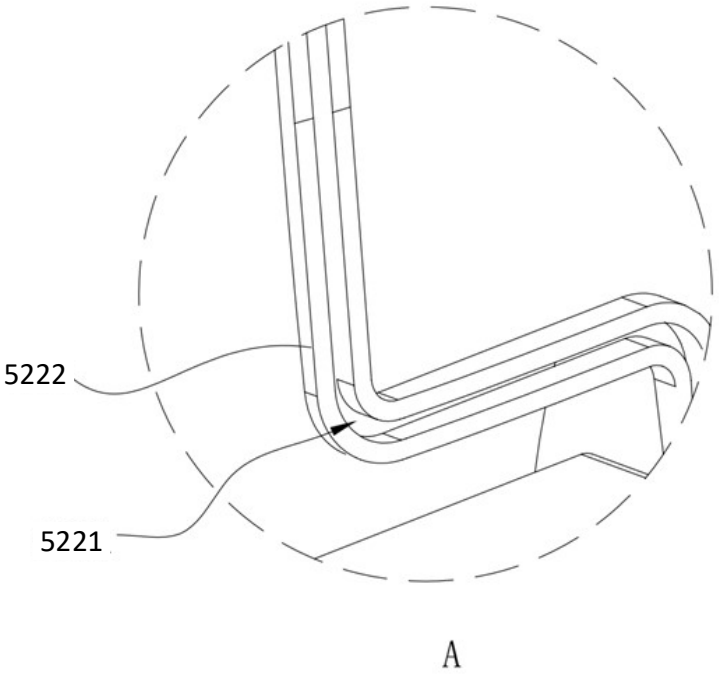

FIG. 31

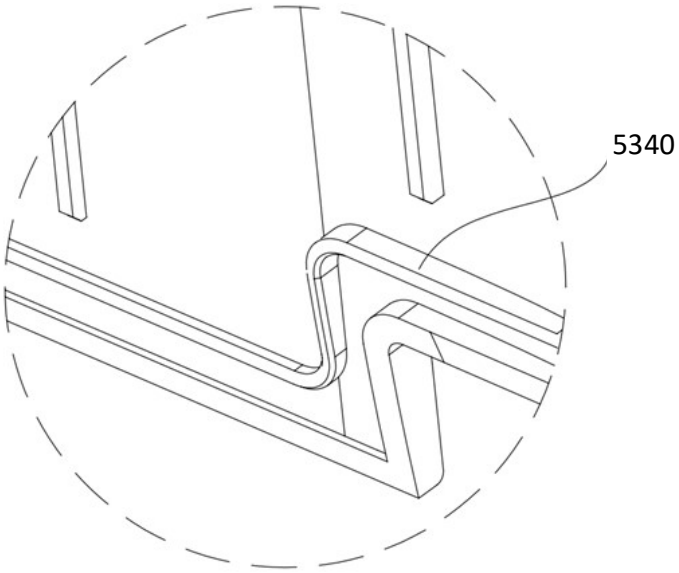

B

FIG. 32

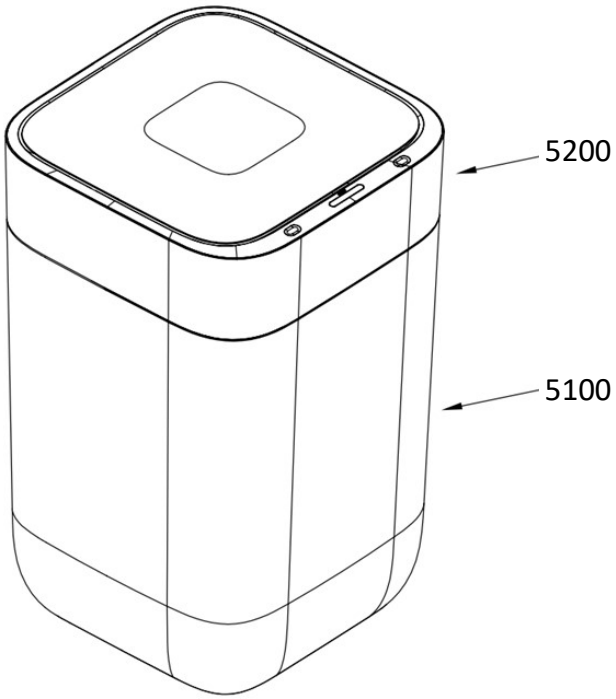

FIG. 33

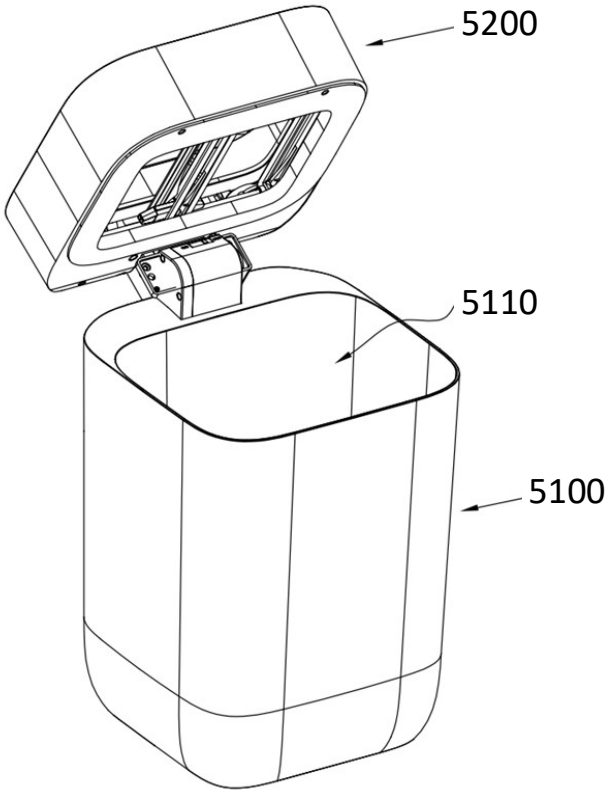

FIG. 34