(12) INTERNATIONAL APPLICATION PUBLISHED UNDER THE PATENT COOPERATION TREATY (PCT)

(19) World Intellectual Property Organization
International Bureau

(43) International Publication Date
23 July 2009 (23.07.2009)

PCT

(10) International Publication Number
WO 2009/090499 A3

(51) International Patent Classification:
A61M 5/31 (2006.01) *A61M 5/32* (2006.01)

(21) International Application Number:
PCT/IB2008/003984

(22) International Filing Date:
29 December 2008 (29.12.2008)

(25) Filing Language: English

(26) Publication Language: English

(30) Priority Data:
61/010,779 11 January 2008 (11.01.2008) US
61/135,262 18 July 2008 (18.07.2008) US
61/192,551 18 September 2008 (18.09.2008) US

(71) Applicant *(for all designated States except US)*: **UCB PHARMA SA** [BE/BE]; Allée de la Recherche, 60, B-1070 Brussels (BE).

(72) Inventor; and

(75) Inventor/Applicant *(for US only)*: **MORGAN, Darrell, P.** [GB/GB]; C/o Ucb Pharma Sa, 208 Bath Road, Berkishire, Slough SL 1 3WE (GB).

(74) Agent: **CAMPBELL, Patrick, John, Henry**; J.A. Kemp & Co., 14 South Square, Gray's Inn, London WC1R 5JJ (GB).

(81) Designated States *(unless otherwise indicated, for every kind of national protection available)*: AE, AG, AL, AM, AO, AT, AU, AZ, BA, BB, BG, BH, BR, BW, BY, BZ, CA, CH, CN, CO, CR, CU, CZ, DE, DK, DM, DO, DZ, EC, EE, EG, ES, FI, GB, GD, GE, GH, GM, GT, HN, HR, HU, ID, IL, IN, IS, JP, KE, KG, KM, KN, KP, KR, KZ, LA, LC, LK, LR, LS, LT, LU, LY, MA, MD, ME, MG, MK, MN, MW, MX, MY, MZ, NA, NG, NI, NO, NZ, OM, PG, PH, PL, PT, RO, RS, RU, SC, SD, SE, SG, SK, SL, SM, ST, SV, SY, TJ, TM, TN, TR, TT, TZ, UA, UG, US, UZ, VC, VN, ZA, ZM, ZW.

[Continued on next page]

WO 2009/090499 A3

(54) Title: SYSTEMS FOR ADMINISTERING MEDICATION FOR RHEUMATOID ARTHRITIS PATIENTS

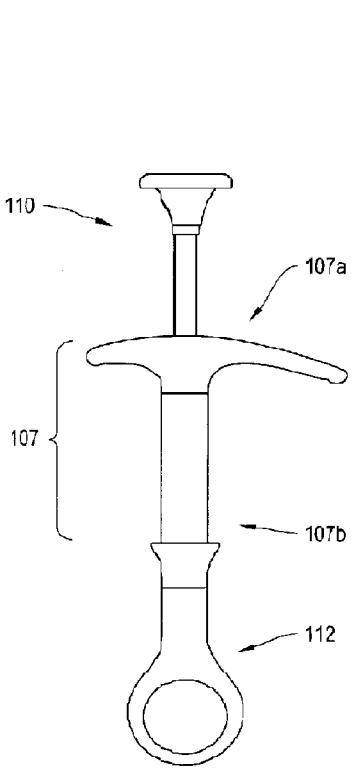

FIG. 1A

(57) Abstract: The syringe systems disclosed herein provide in part devices for allowing patients with compromised joint strength to more easily administer medicine. Certain exemplary syringe embodiments include a handle forming a handgrip, a syringe barrel that magnifies the dosage marks located on an inner barrel, and a tip cap slidably engageable with the syringe barrel for shielding a needle.

(84) Designated States *(unless otherwise indicated, for every kind of regional protection available)*: ARIPO (BW, GH, GM, KE, LS, MW, MZ, NA, SD, SL, SZ, TZ, UG, ZM, ZW), Eurasian (AM, AZ, BY, KG, KZ, MD, RU, TJ, TM), European (AT, BE, BG, CH, CY, CZ, DE, DK, EE, ES, FI, FR, GB, GR, HR, HU, IE, IS, IT, LT, LU, LV, MC, MT, NL, NO, PL, PT, RO, SE, SI, SK, TR), OAPI (BF, BJ, CF, CG, CI, CM, GA, GN, GQ, GW, ML, MR, NE, SN, TD, TG).

Published:

— *with international search report (Art. 21(3))*

— *before the expiration of the time limit for amending the claims and to be republished in the event of receipt of amendments (Rule 48.2(h))*

(88) Date of publication of the international search report:
24 September 2009