(12) INTERNATIONAL APPLICATION PUBLISHED UNDER THE PATENT COOPERATION TREATY (PCT)

(19) World Intellectual Property Organization
International Bureau

(43) International Publication Date
23 October 2008 (23.10.2008)

PCT

(10) International Publication Number
WO 2008/127747 A1

(51) International Patent Classification:
F01B 29/10 (2006.01) *F02G 1/04* (2006.01)

(21) International Application Number:
PCT/US2008/050977

(22) International Filing Date: 14 January 2008 (14.01.2008)

(25) Filing Language: English

(26) Publication Language: English

(30) Priority Data:
11/734,377 12 April 2007 (12.04.2007) US

(71) Applicant *(for all designated States except US)*: **SUNPOWER, INC.** [US/US]; 182 Mill Street, Athens, OH 45701 (US).

(72) Inventors; and
(75) Inventors/Applicants *(for US only)*: **CALE, E., Todd** [US/US]; 3455 Youba Ridge Road, Coolville, OH 45723 (US). **COURTNEY, Aaron, M.** [US/US]; 5300 Townsend Road, Athens, OH 45701 (US). **ROYSE, Jerry, A.** [US/US]; 4966 Alton Street, Albany, OH 45710 (US).

(74) Agents: **KREMBLAS, Foster** et al.; Phillips & Pollick, 7632 Slate Ridge Blvd., Reynoldsburg, OH 43068 (US).

(81) Designated States *(unless otherwise indicated, for every kind of national protection available)*: AE, AG, AL, AM, AO, AT, AU, AZ, BA, BB, BG, BH, BR, BW, BY, BZ, CA, CH, CN, CO, CR, CU, CZ, DE, DK, DM, DO, DZ, EC, EE, EG, ES, FI, GB, GD, GE, GH, GM, GT, HN, HR, HU, ID, IL, IN, IS, JP, KE, KG, KM, KN, KP, KR, KZ, LA, LC, LK, LR, LS, LT, LU, LY, MA, MD, ME, MG, MK, MN, MW, MX, MY, MZ, NA, NG, NI, NO, NZ, OM, PG, PH, PL, PT, RO, RS, RU, SC, SD, SE, SG, SK, SL, SM, SV, SY, TJ, TM, TN, TR, TT, TZ, UA, UG, US, UZ, VC, VN, ZA, ZM, ZW.

(84) Designated States *(unless otherwise indicated, for every kind of regional protection available)*: ARIPO (BW, GH, GM, KE, LS, MW, MZ, NA, SD, SL, SZ, TZ, UG, ZM, ZW), Eurasian (AM, AZ, BY, KG, KZ, MD, RU, TJ, TM), European (AT, BE, BG, CH, CY, CZ, DE, DK, EE, ES, FI, FR, GB, GR, HR, HU, IE, IS, IT, LT, LU, LV, MC, MT, NL, NO, PL, PT, RO, SE, SI, SK, TR), OAPI (BF, BJ, CF, CG, CI, CM, GA, GN, GQ, GW, ML, MR, NE, SN, TD, TG).

Declarations under Rule 4.17:
— *as to the identity of the inventor (Rule 4.17(i))*
— *as to the applicant's entitlement to claim the priority of the earlier application (Rule 4.17(iii))*

Published:
— *with international search report*

(54) Title: IMPROVED MULTI-PIECE PISTON FOR A FREE PISTON MACHINE

Fig. 1

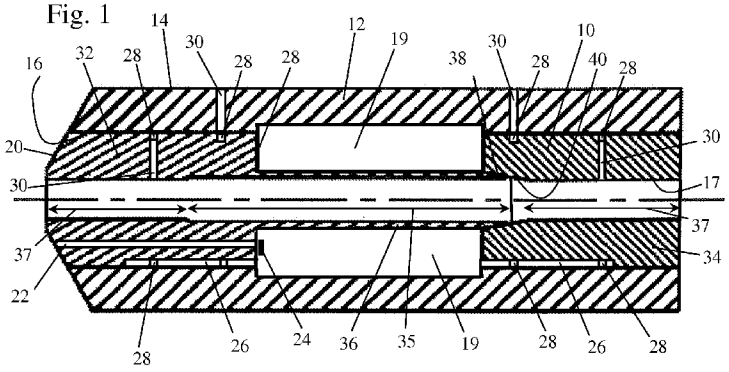

(57) Abstract: The concentricity and coaxiality of a central bore through a piston for a free piston Stirling machine is improved with a piston that has a sleeve with a core constructed from at least two, separate, axially-engaging core components sealed within the sleeve. During fabrication, a central bore is machined through each of the core components. The piston is assembled by heating the sleeve and cooling the core components, inserting the core components into the sleeve and then allowing the sleeve to cool and the core components to warm. This drives the core components into sealed engagement with each other and with the sleeve and aligns the central bore coaxially with the outer cylindrical surface of the sleeve.

WO 2008/127747 A1