(12) INTERNATIONAL APPLICATION PUBLISHED UNDER THE PATENT COOPERATION TREATY (PCT)

(19) World Intellectual Property Organization
International Bureau

(43) International Publication Date
23 October 2025 (23.10.2025)

WIPO | PCT

(10) International Publication Number
WO 2025/221233 A1

(51) International Patent Classification:
C08J 5/18 (2006.01) *B29D 7/01* (2006.01)
B65D 65/40 (2006.01) *C08L 23/06* (2006.01)

(21) International Application Number:
PCT/US2024/024595

(22) International Filing Date:
15 April 2024 (15.04.2024)

(25) Filing Language: English

(26) Publication Language: English

(71) Applicant: **AMCOR FLEXIBLES NORTH AMERICA, INC.** [US/US]; Office of Intellectual Property Counsel, P.O. Box 669, Neenah, WI 54957 (US).

(72) Inventors: **ONGENAE, Emiel**; Office of Intellectual Property Counsel, P.O. Box 669, Neenah, Wisconsin 54957 (US). **DE SCHOENMAKER, Bert**; Office of Intellectual Property Counsel, P.O. Box 669, Neenah, Wisconsin 54957 (US). **KUJALA, Marjo-Riikka**; Office of Intellectual Property Counsel, P.O. Box 669, Neenah, Wisconsin 54957 (US). **BARTON, Sam**; Office of Intellectual Property Counsel, P.O. Box 669, Neenah, Wisconsin 54957 (US).

(74) Agent: **NETT, Lynn M.**; AMCOR FLEXIBLES NORTH AMERICA, INC., Office of Intellectual Property Counsel, P.O. Box 669, Neenah, Wisconsin 54957 (US).

(81) Designated States *(unless otherwise indicated, for every kind of national protection available)*: AE, AG, AL, AM, AO, AT, AU, AZ, BA, BB, BG, BH, BN, BR, BW, BY, BZ, CA, CH, CL, CN, CO, CR, CU, CV, CZ, DE, DJ, DK, DM, DO, DZ, EC, EE, EG, ES, FI, GB, GD, GE, GH, GM, GT, HN, HR, HU, ID, IL, IN, IQ, IR, IS, IT, JM, JO, JP, KE, KG, KH, KN, KP, KR, KW, KZ, LA, LC, LK, LR, LS, LU, LY, MA, MD, MG, MK, MN, MU, MW, MX, MY, MZ, NA, NG, NI, NO, NZ, OM, PA, PE, PG, PH, PL, PT, QA, RO, RS, RU, RW, SA, SC, SD, SE, SG, SK, SL, ST, SV, SY, TH, TJ, TM, TN, TR, TT, TZ, UA, UG, US, UZ, VC, VN, WS, ZA, ZM, ZW.

(54) Title: THERMOFORMABLE BASE FILM, THERMOFORMED BASE, AND PACKAGED PRODUCT

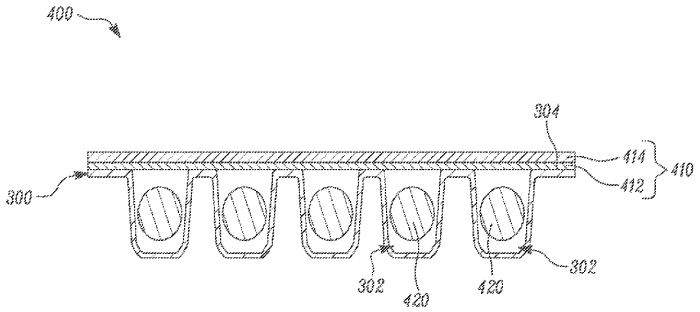

FIG. 4

(57) Abstract: A thermoformable base film is disclosed. The thermoformable base film includes: a first layer including at least one polyethylene and having an overall density between about 0.85 g/cm^3 and 0.92 g/cm^3; a second layer including a high-density polyethylene and a hydrocarbon resin; and a third layer including at least one polyethylene and having an overall density between about 0.92 g/cm^3 and 0.97 g/cm^3. The second layer is located between the first layer and the third layer. After thermoforming, the thermoformable base film maintains the shape taken during thermoforming. The thermoformable base film may be used to produce a thermoformed base. The thermoformed base may be heat sealed to a lid packaging component to form a packaged product.

[Continued on next page]

WO 2025/221233 A1

(84) **Designated States** *(unless otherwise indicated, for every kind of regional protection available)*: ARIPO (BW, CV, GH, GM, KE, LR, LS, MW, MZ, NA, RW, SC, SD, SL, ST, SZ, TZ, UG, ZM, ZW), Eurasian (AM, AZ, BY, KG, KZ, RU, TJ, TM), European (AL, AT, BE, BG, CH, CY, CZ, DE, DK, EE, ES, FI, FR, GB, GR, HR, HU, IE, IS, IT, LT, LU, LV, MC, ME, MK, MT, NL, NO, PL, PT, RO, RS, SE, SI, SK, SM, TR), OAPI (BF, BJ, CF, CG, CI, CM, GA, GN, GQ, GW, KM, ML, MR, NE, SN, TD, TG).

Published:

— *with international search report (Art. 21(3))*