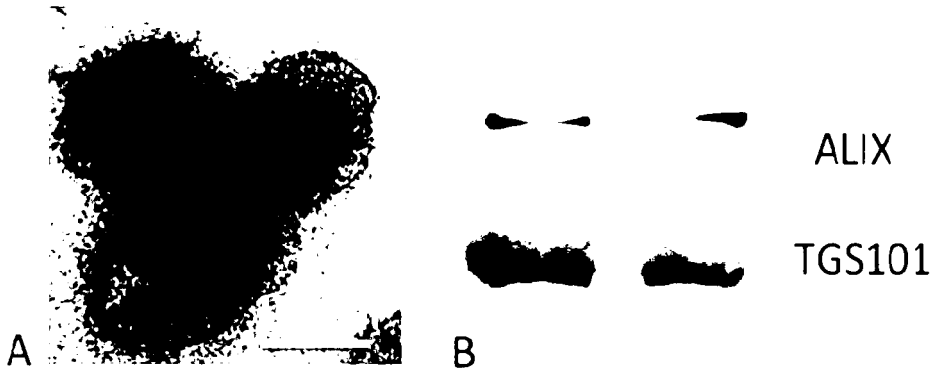

Figure 1

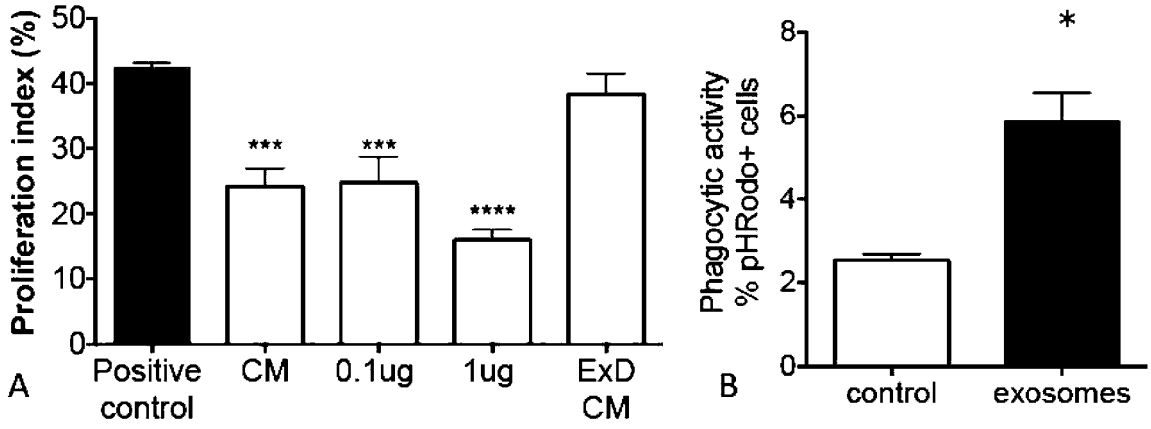

Figure 2

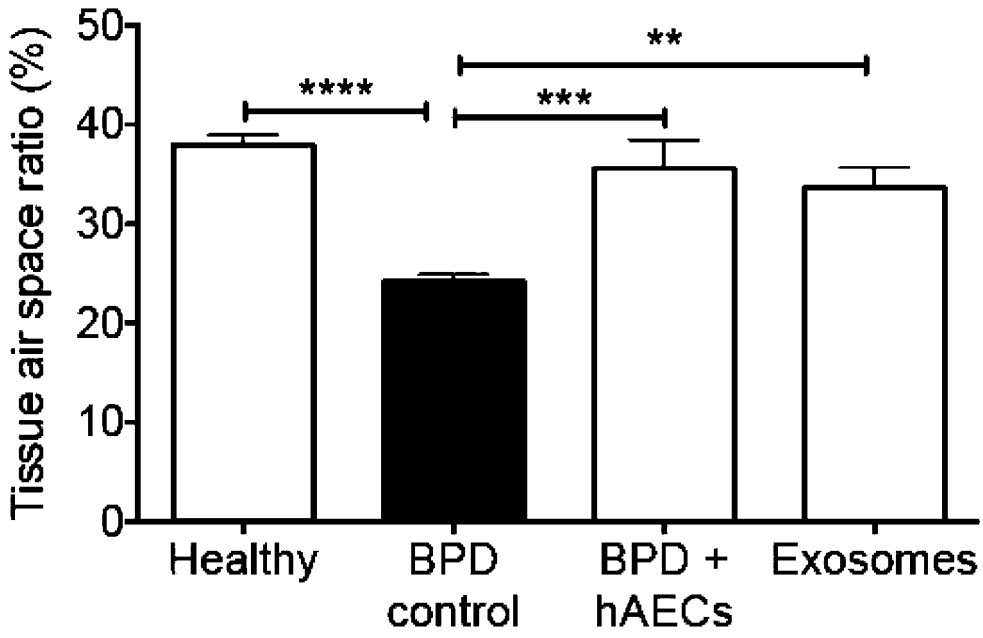
Tissue air space ratio (%)
50
40
30
20
10
0
****
***
**
Healthy
BPD control
BPD + hAECs
Exosomes

Figure 3

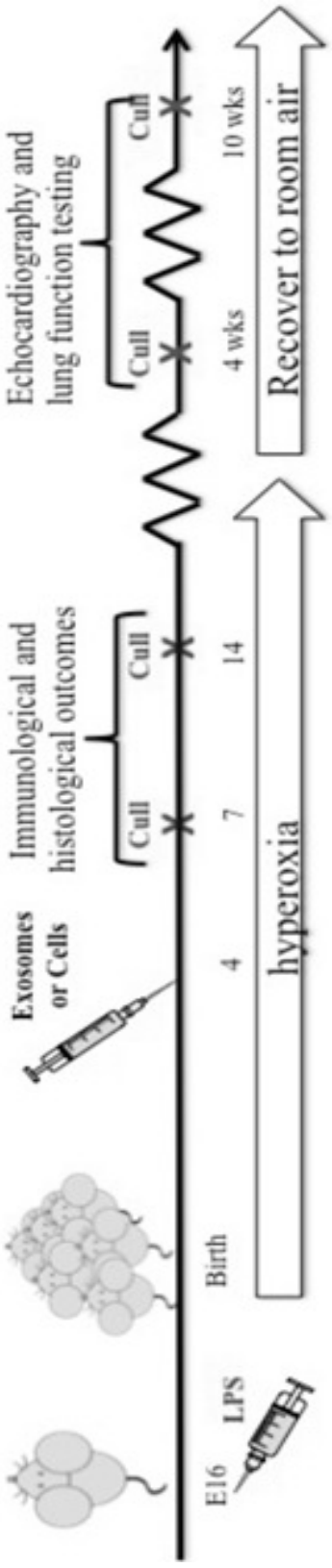
E16
LPS
Birth
4
7
14
4 wks
10 wks
hyperoxia
Recover to room air
Exosomes or Cells
Immunological and histological outcomes
Cull
Cull
Cull
Cull
Echocardiography and lung function testing

Figure 4

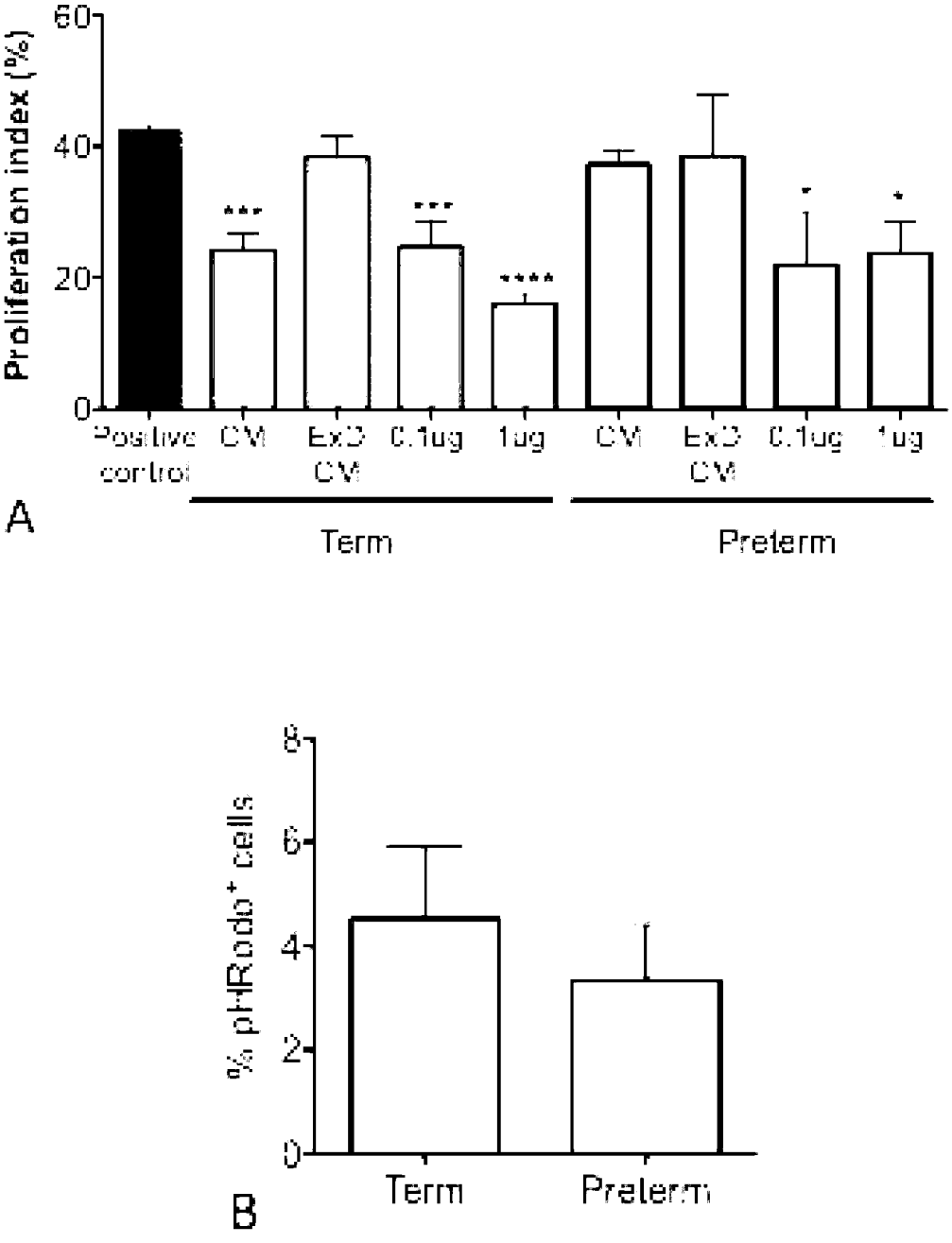
Proliferation index (%)
60
40
20
0
***
***
****
*
*
Positive control
CM
ExO CM
0.1ug
1ug
CM
ExO CM
0.1ug
1ug
A
Term
Preterm
% pHRodo+ cells
8
6
4
2
0
Term
Preterm
B

Figure 5

A

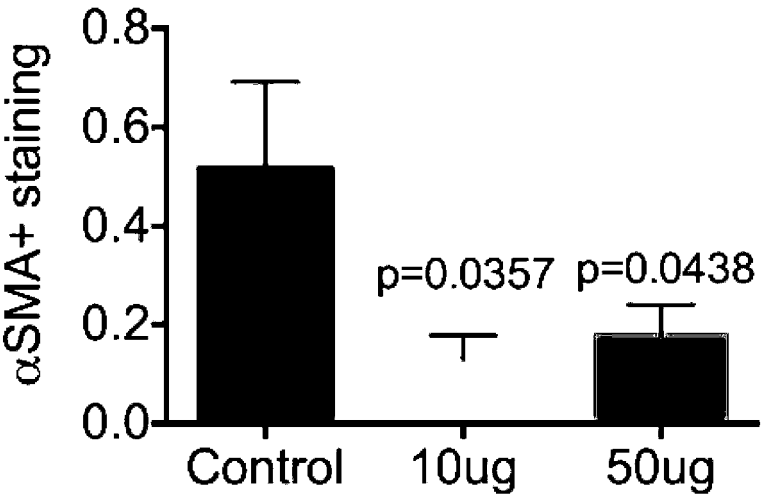
αSMA+ staining
0.8
0.6
0.4
0.2
0.0
p=0.0357
p=0.0438
Control
10ug
50ug

B

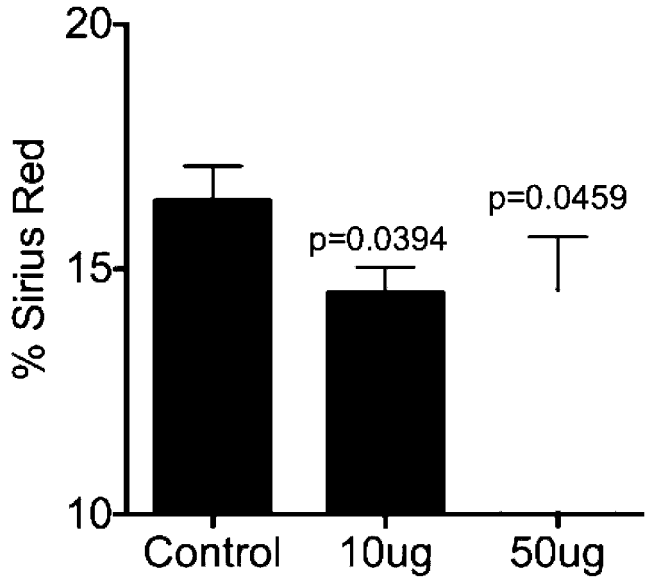
% Sirius Red
20
15
10
p=0.0394
p=0.0459
Control
10ug
50ug

Figure 6

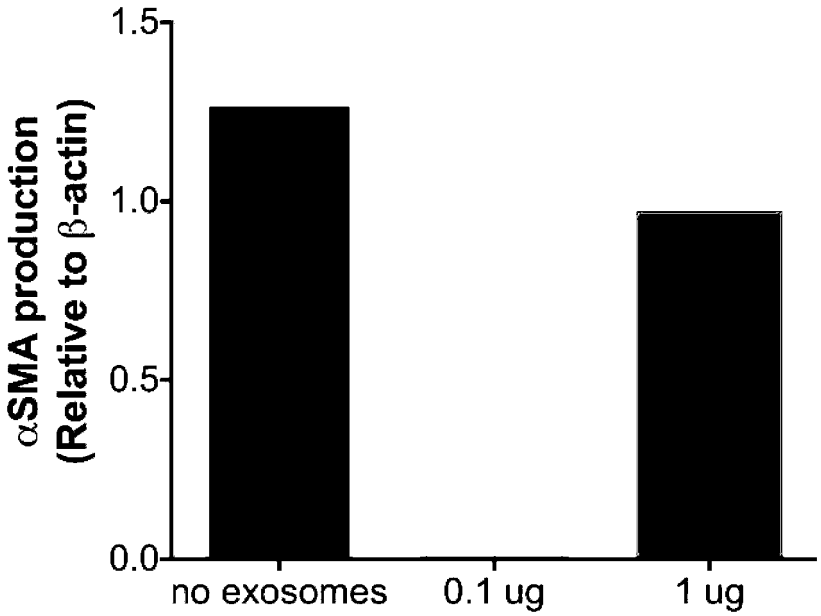
αSMA production
(Relative to β-actin)
1.5
1.0
0.5
0.0
no exosomes
0.1 ug
1 ug

Figure 7

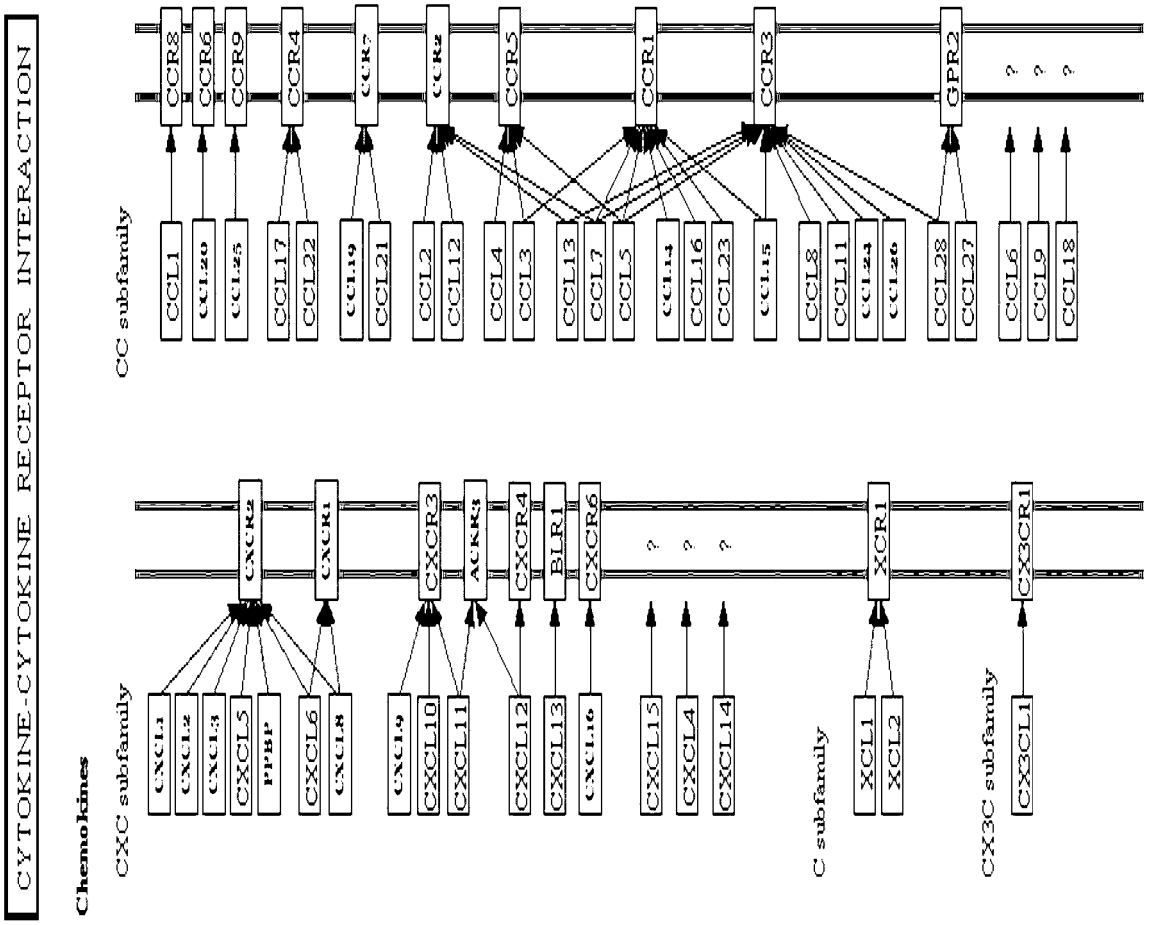
CYTOKINE-CYTOKINE RECEPTOR INTERACTION
Chemokines
CXC subfamily
CC subfamily
C subfamily
CX3C subfamily
CXCR2
CXCR1
CXCR3
ACKR3
CXCR4
BLR1
CXCR6
XCR1
CX3CR1
CCR8
CCR6
CCR9
CCR4
CCR7
CCR2
CCR5
CCR1
CCR3
GPR2
CXCL1
CXCL2
CXCL3
CXCL5
PPBP
CXCL6
CXCL8
CXCL9
CXCL10
CXCL11
CXCL12
CXCL13
CXCL16
CXCL15
CXCL4
CXCL14
XCL1
XCL2
CX3CL1
CCL1
CCL20
CCL25
CCL17
CCL22
CCL19
CCL21
CCL2
CCL12
CCL4
CCL3
CCL13
CCL7
CCL5
CCL14
CCL16
CCL23
CCL15
CCL8
CCL11
CCL24
CCL26
CCL28
CCL27
CCL6
CCL9
CCL18
? ? ?

Figure 8A

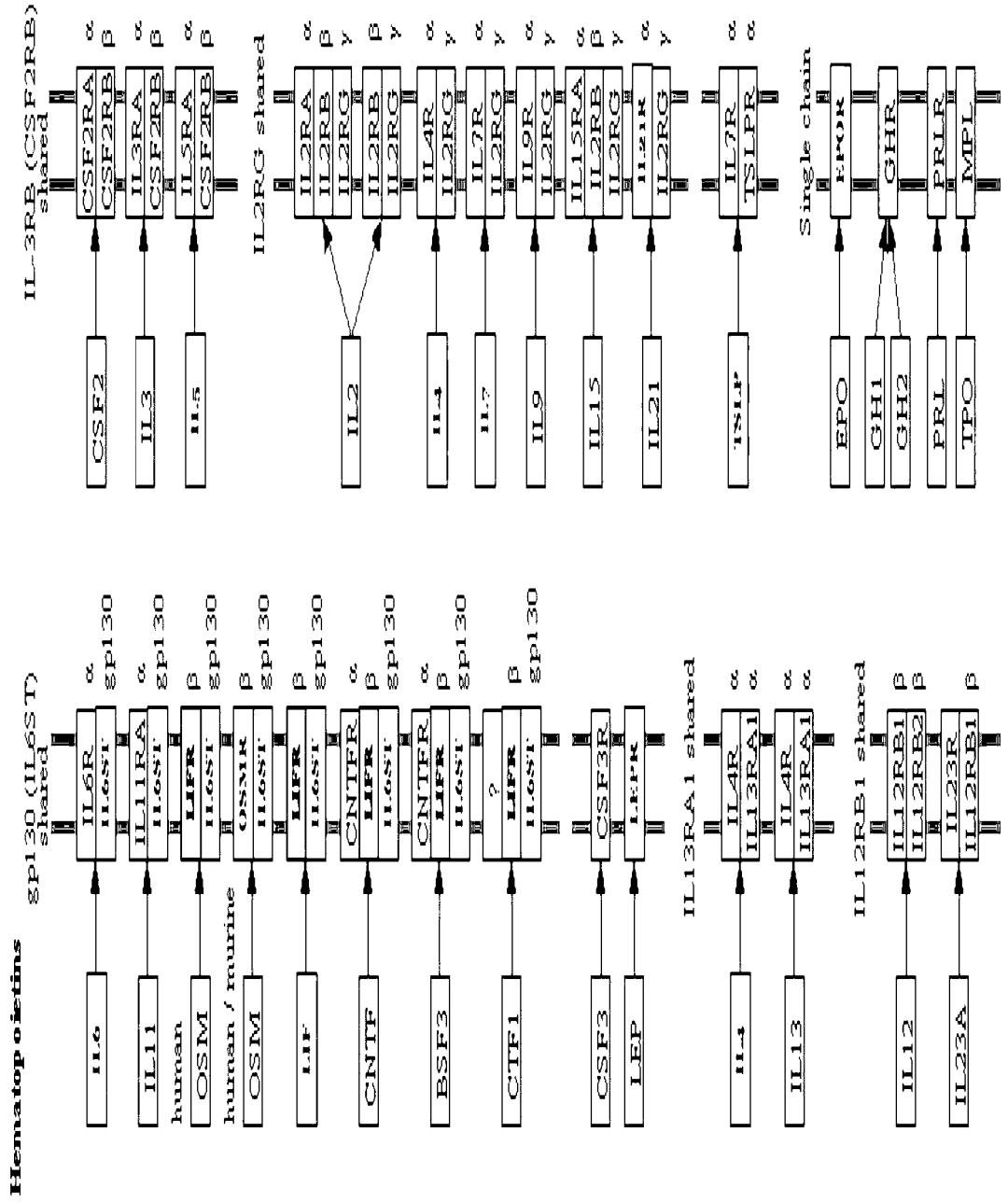
Hematopoietins
gp130 (IL6ST) shared
IL-3RB (CSF2RB) shared
IL2RG shared
IL13RA1 shared
IL12RB1 shared
Single chain
IL6
IL11
human OSM
human / murine OSM
LIF
CNTF
BSF3
CTF1
CSF3
LEP
IL4
IL13
IL12
IL23A
CSF2
IL3
IL5
IL2
IL4
IL7
IL9
IL15
IL21
TSLP
EPO
GH1
GH2
PRL
TPO
IL6R
IL6ST
IL11RA
LIFR
OSMR
CNTFR
?
CSF3R
LEPR
IL4R
IL13RA1
IL12RB1
IL12RB2
IL23R
CSF2RA
CSF2RB
IL3RA
IL5RA
IL2RA
IL2RB
IL2RG
IL4R
IL7R
IL9R
IL15RA
IL21R
IL7R
TSLPR
EPOR
GHR
PRLR
MPL
α
β
γ

Figure 8B

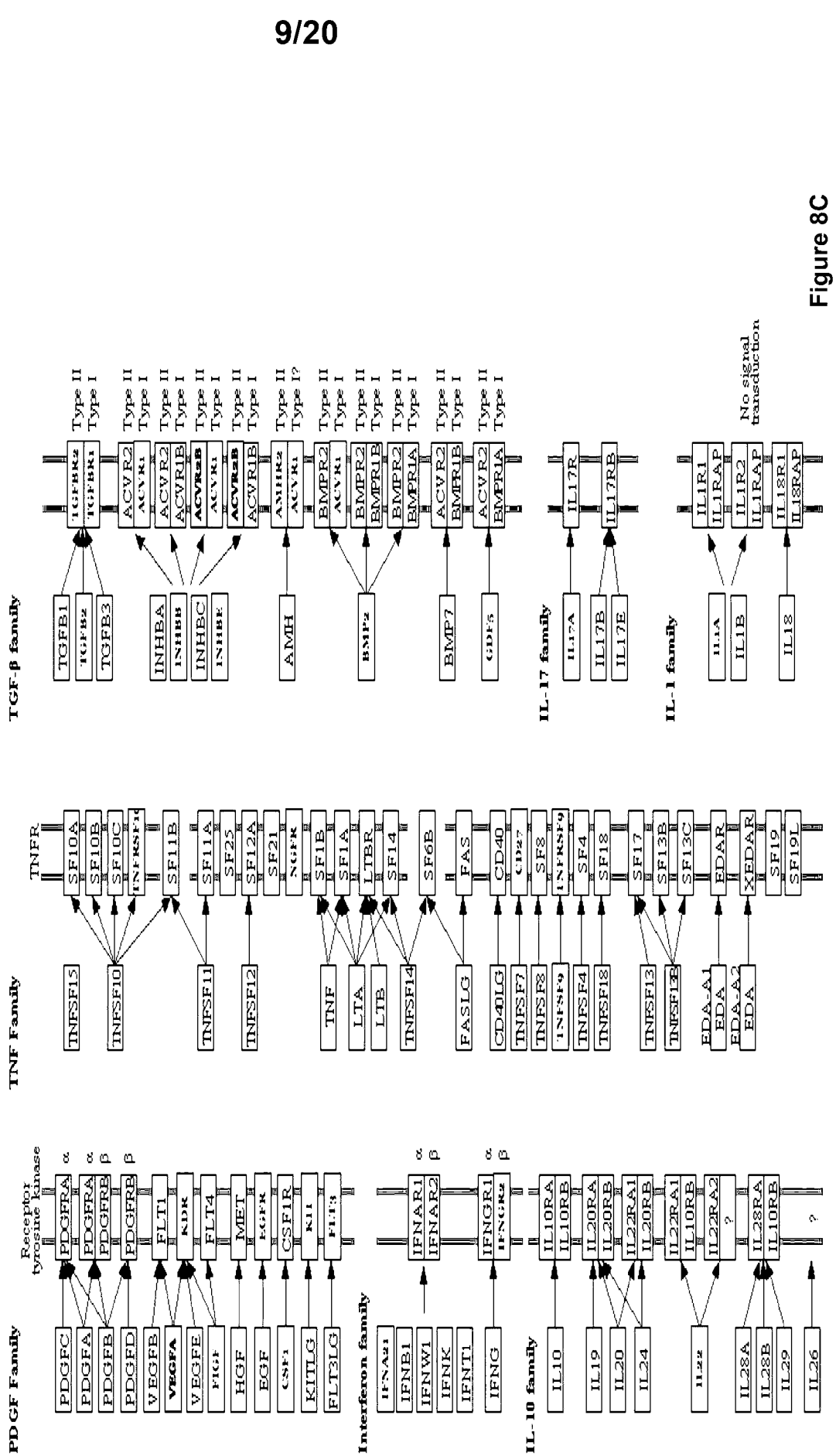
PDGF Family
Receptor tyrosine kinase
PDGFC
PDGFA
PDGFB
PDGFD
VEGFB
VEGFA
VEGFE
PlGF
HGF
EGF
CSF1
KITLG
FLT3LG
PDGFRA
PDGFRA
PDGFRB
PDGFRB
FLT1
KDR
FLT4
MET
EGFR
CSF1R
KIT
FLT3
α
α
β
β
Interferon family
IFNA21
IFNB1
IFNW1
IFNK
IFNT1
IFNG
IFNAR1
IFNAR2
IFNGR1
IFNGR2
α
β
α
β
IL-10 family
IL10
IL19
IL20
IL24
IL22
IL28A
IL28B
IL29
IL26
IL10RA
IL10RB
IL20RA
IL20RB
IL22RA1
IL20RB
IL22RA1
IL10RB
IL22RA2
?
IL28RA
IL10RB
?
TNF Family
TNFSF15
TNFSF10
TNFSF11
TNFSF12
TNF
LTA
LTB
TNFSF14
FASLG
CD40LG
TNFSF7
TNFSF8
TNFSF9
TNFSF4
TNFSF18
TNFSF13
TNFSF13B
EDA-A1
EDA
EDA-A2
EDA
TNFR
SF10A
SF10B
SF10C
TNFRSF12
SF11B
SF11A
SF25
SF12A
SF21
NGFR
SF1B
SF1A
LTBR
SF14
SF6B
FAS
CD40
CD27
SF8
TNFRSF9
SF4
SF18
SF17
SF13B
SF13C
EDAR
XEDAR
SF19
SF19L
TGF-β family
TGFB1
TGFB2
TGFB3
INHBA
INHBB
INHBC
INHBE
AMH
BMP2
BMP7
GDF5
TGFBR2
TGFBR1
ACVR2
ACVR1
ACVR2
ACVR1B
ACVR2B
ACVR1
ACVR2B
ACVR1B
AMHR2
ACVR1
BMPR2
ACVR1
BMPR2
BMPR1B
BMPR2
BMPR1A
ACVR2
BMPR1B
ACVR2
BMPR1A
Type II
Type I
Type II
Type I
Type II
Type I
Type II
Type I
Type II
Type I?
Type II
Type I
Type II
Type I
Type II
Type I
Type II
Type I
Type II
Type I
IL-17 family
IL17A
IL17B
IL17E
IL17R
IL17RB
IL-1 family
IL1A
IL1B
IL18
IL1R1
IL1RAP
IL1R2
IL1RAP
IL18R1
IL18RAP
No signal transduction

Figure 8C

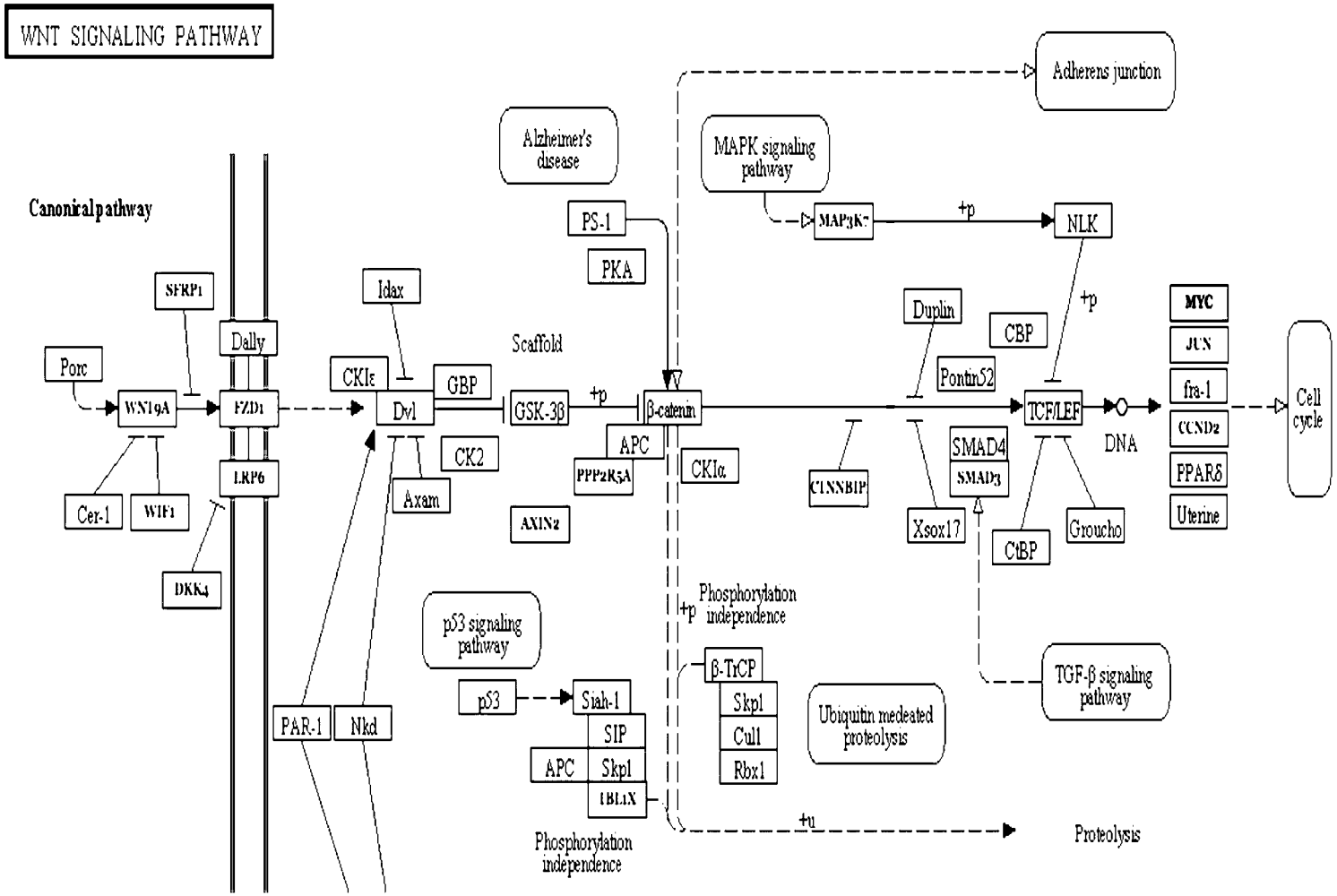
WNT SIGNALING PATHWAY
Canonical pathway
Porc
WNT9A
Cer-1
WIF1
SFRP1
Dally
FZD1
LRP6
DKK4
CKIε
Idax
Dvl
GBP
CK2
Axam
PAR-1
Nkd
Scaffold
GSK-3β
+p
AXIN2
Alzheimer's disease
PS-1
PKA
β-catenin
APC
PPP2R5A
CKIα
Adherens junction
MAPK signaling pathway
MAP3K7
+p
NLK
+p
Duplin
CBP
Pontin52
CTNNBIP
SMAD4
SMAD3
Xsox17
TCF/LEF
DNA
CtBP
Groucho
MYC
JUN
fra-1
CCND2
PPARδ
Uterine
Cell cycle
p53 signaling pathway
p53
Siah-1
SIP
APC
Skp1
TBL1X
Phosphorylation independence
+p
Phosphorylation independence
β-TrCP
Skp1
Cul1
Rbx1
Ubiquitin medeated proteolysis
TGF-β signaling pathway
+u
Proteolysis

Figure 9A

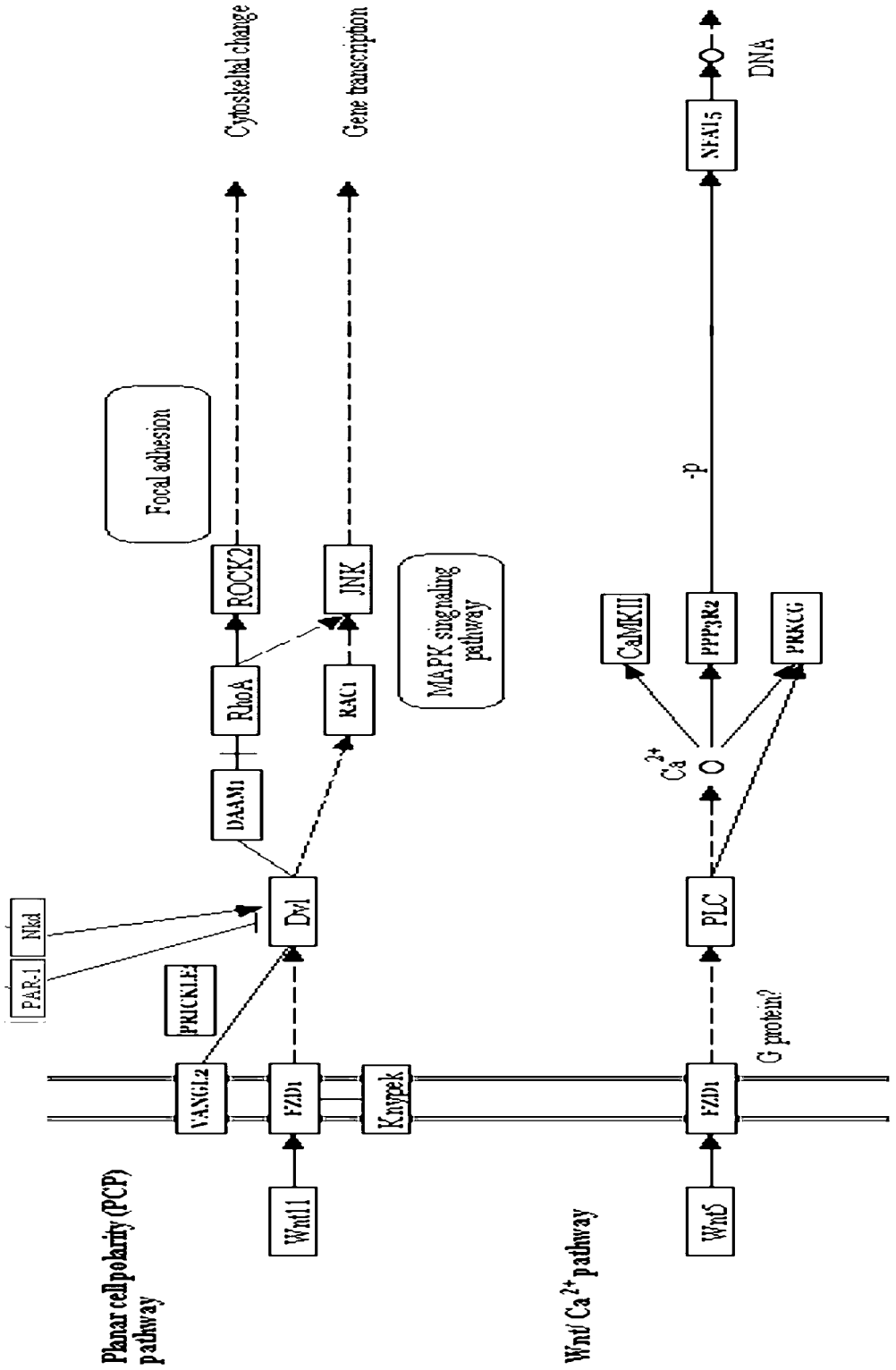
Planar cell polarity (PCP) pathway
Wnt11
VANGL2
FZD1
Knypek
PRICKLE
PAR-1
Nkd
Dvl
DAAM1
RhoA
ROCK2
KAC1
JNK
MAPK singnaling pathway
Focal adhesion
Cytoskeletal change
Gene transcription
Wnt/ Ca 2+ pathway
Wnt5
FZD1
G protein?
PLC
Ca2+
CaMKII
PPP3R2
PRKCG
-p
NFAT5
DNA

Figure 9B

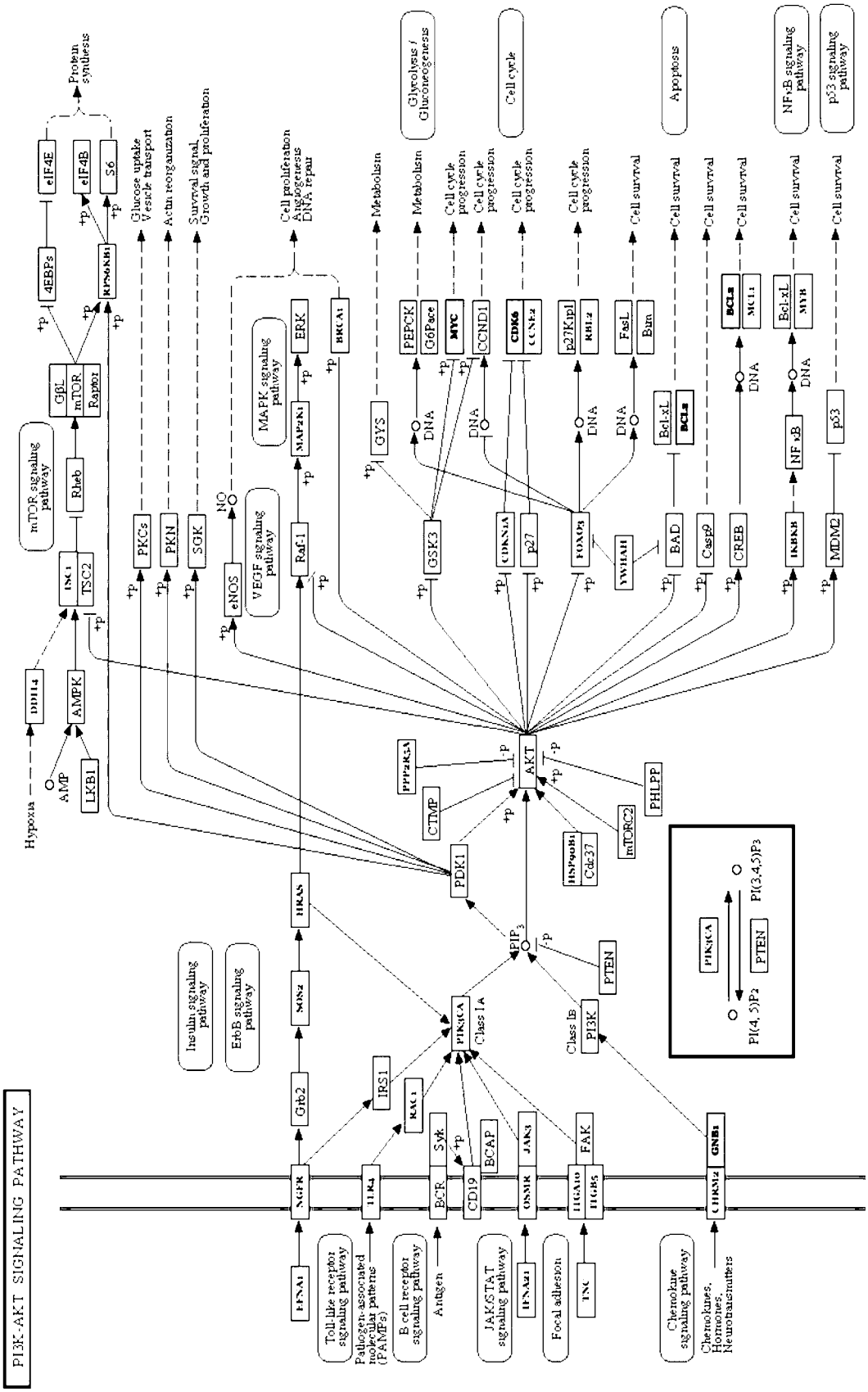
PI3K-AKT SIGNALING PATHWAY
Protein synthesis
Glucose uptake
Vesicle transport
Actin reorganization
Survival signal
Growth and proliferation
Cell proliferation
Angiogenesis
DNA repair
Metabolism
Glycolysis / Gluconeogenesis
Cell cycle progression
Cell cycle
Cell survival
Apoptosis
NF-κB signaling pathway
p53 signaling pathway
Hypoxia
AMP
LKB1
AMPK
DDIT4
TSC1
TSC2
Rheb
mTOR signaling pathway
GβL
mTOR
Raptor
4EBPs
eIF4E
eIF4B
S6
RPS6KB1
PKCs
PKN
SGK
NO
eNOS
VEGF signaling pathway
MAPK signaling pathway
ERK
MAPK1
Raf-1
BRCA1
GYS
PEPCK
G6Pase
MYC
CCND1
CDK6
CCNE2
p27Kip1
KRT2
FasL
Bim
Bcl-xL
BCL2
BAD
Casp9
CREB
MCL1
Bcl-xL
MYB
NFκB
MDM2
p53
DNA
CDKNIA
p27
FOXOs
YWHAH
GSK3
PPP2R5A
CTMP
PDK1
AKT
PHLPP
mTORC2
HSP90B1
Cdc37
PIP3
PIK3CA
PTEN
PI(4,5)P2
PI(3,4,5)P3
Class IA
Class IB
PI3K
IRS1
Grb2
SOS2
HRAS
Insulin signaling pathway
ErbB signaling pathway
NGFR
ITGB1
BCR
Syk
CD19
BCAP
JAK3
FAK
GNB1
Toll-like receptor signaling pathway
Pathogen-associated molecular patterns (PAMPs)
B cell receptor signaling pathway
Antigen
JAK/STAT signaling pathway
Focal adhesion
Chemokine signaling pathway
Chemokines, Hormones, Neurotransmitters

Figure 10

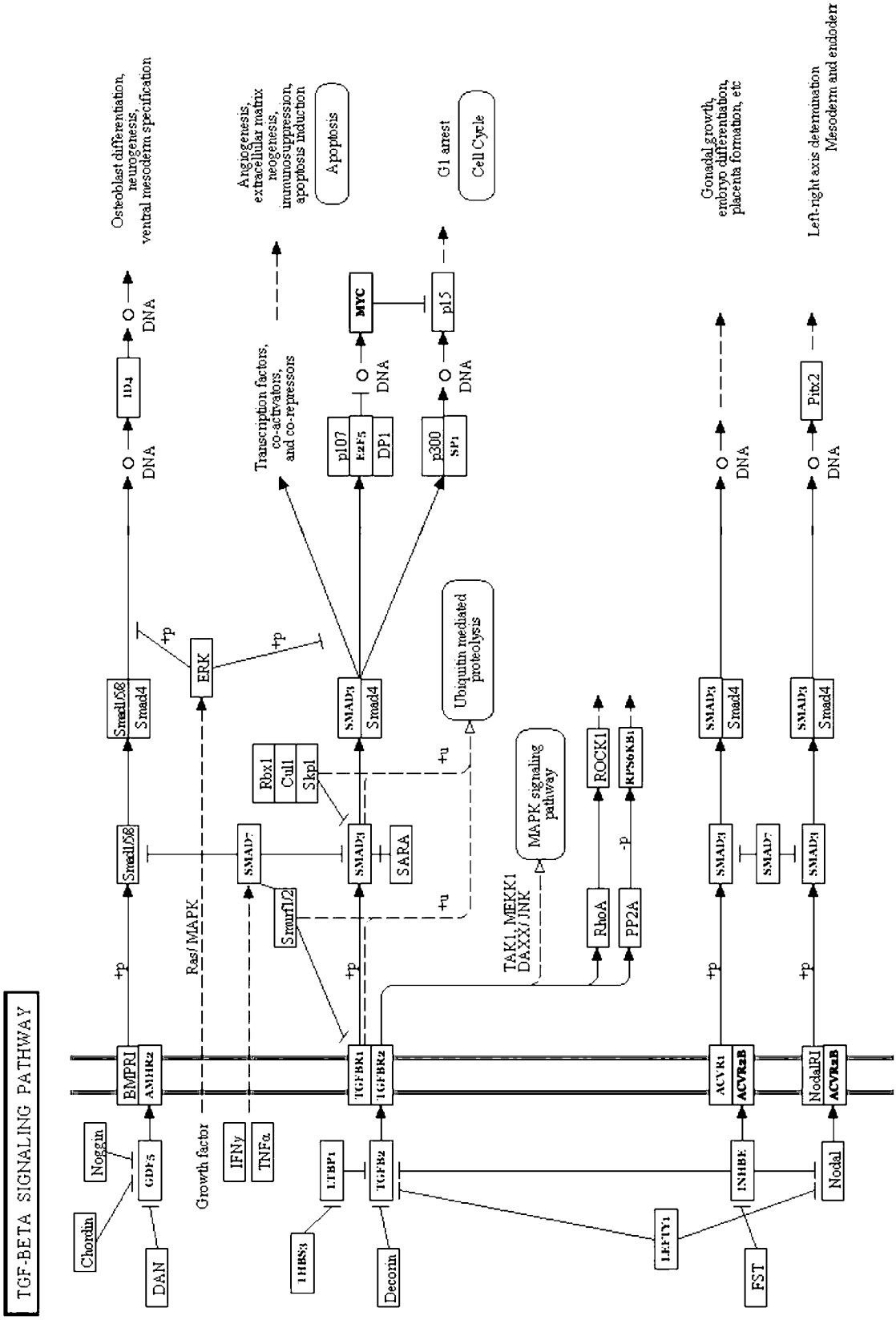
TGF-BETA SIGNALING PATHWAY
Osteoblast differentiation, neurogenesis, ventral mesoderm specification
Angiogenesis, extracellular matrix neogenesis, immunosuppression, apoptosis induction
Apoptosis
G1 arrest
Cell Cycle
Gonadal growth, embryo differentiation, placenta formation, etc
Left-right axis determination
Mesoderm and endoderm
DNA
ID4
MYC
p15
p107
E2F5
DP1
p300
SP1
Pitx2
Transcription factors, co-activators, and co-repressors
Ubiquitin mediated proteolysis
MAPK signaling pathway
TAK1, MEKK1
DAXX/JNK
ERK
Ras/MAPK
Growth factor
IFNγ
TNFα
Chordin
Noggin
DAN
GDF5
BMPR1
AMHR2
Smad1/5/8
Smad4
TGFBR1
TGFBR2
SMAD2
SMAD3
SMAD7
Smurf1/2
Rbx1
Cul1
Skp1
SARA
ROCK1
RhoA
PP2A
LTBP1
TGFB2
Decorin
LEFTY1
INHBB
FST
ACVR1
ACVR2B
NodalR1
Nodal
+p
-p
+u

Figure 11

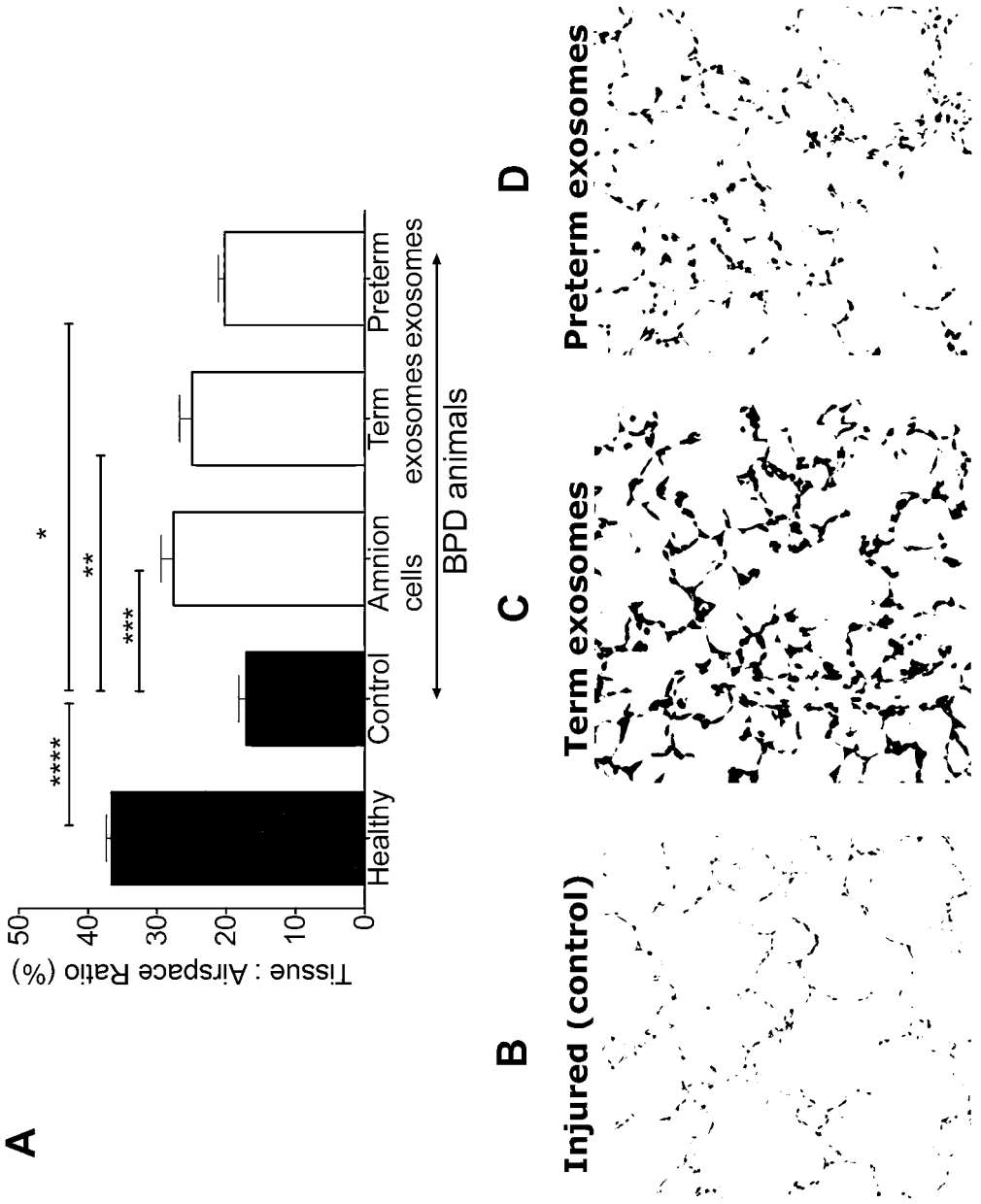
A
Tissue : Airspace Ratio (%)
0
10
20
30
40
50
****
***
**
*
Healthy
Control
Amnion cells
Term exosomes
Preterm exosomes
BPD animals
B
Injured (control)
C
Term exosomes
D
Preterm exosomes

Figure 12

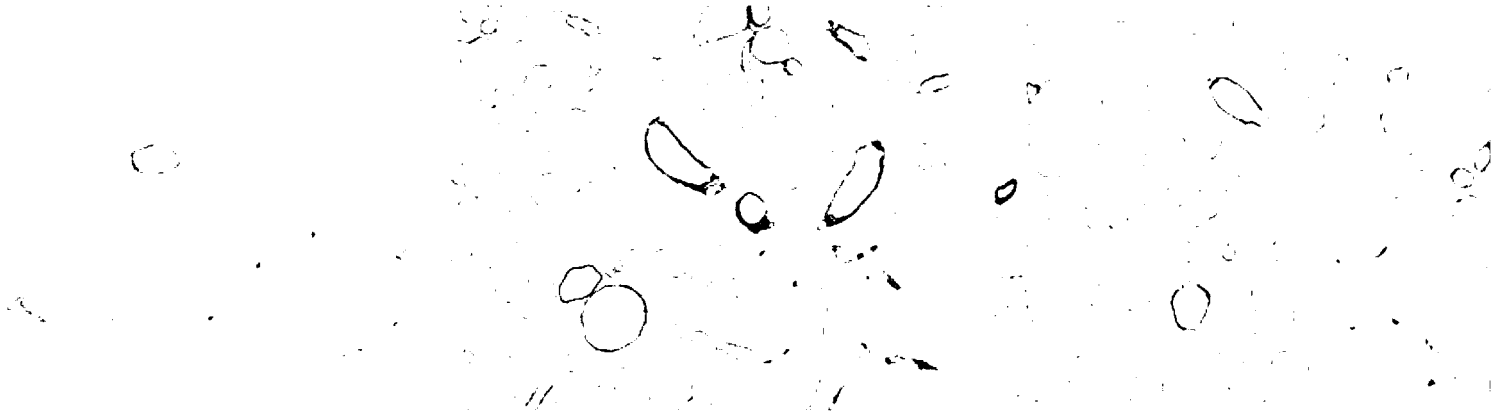

Control (saline) hAECs Exosomes (term)

A B C

Figure 13

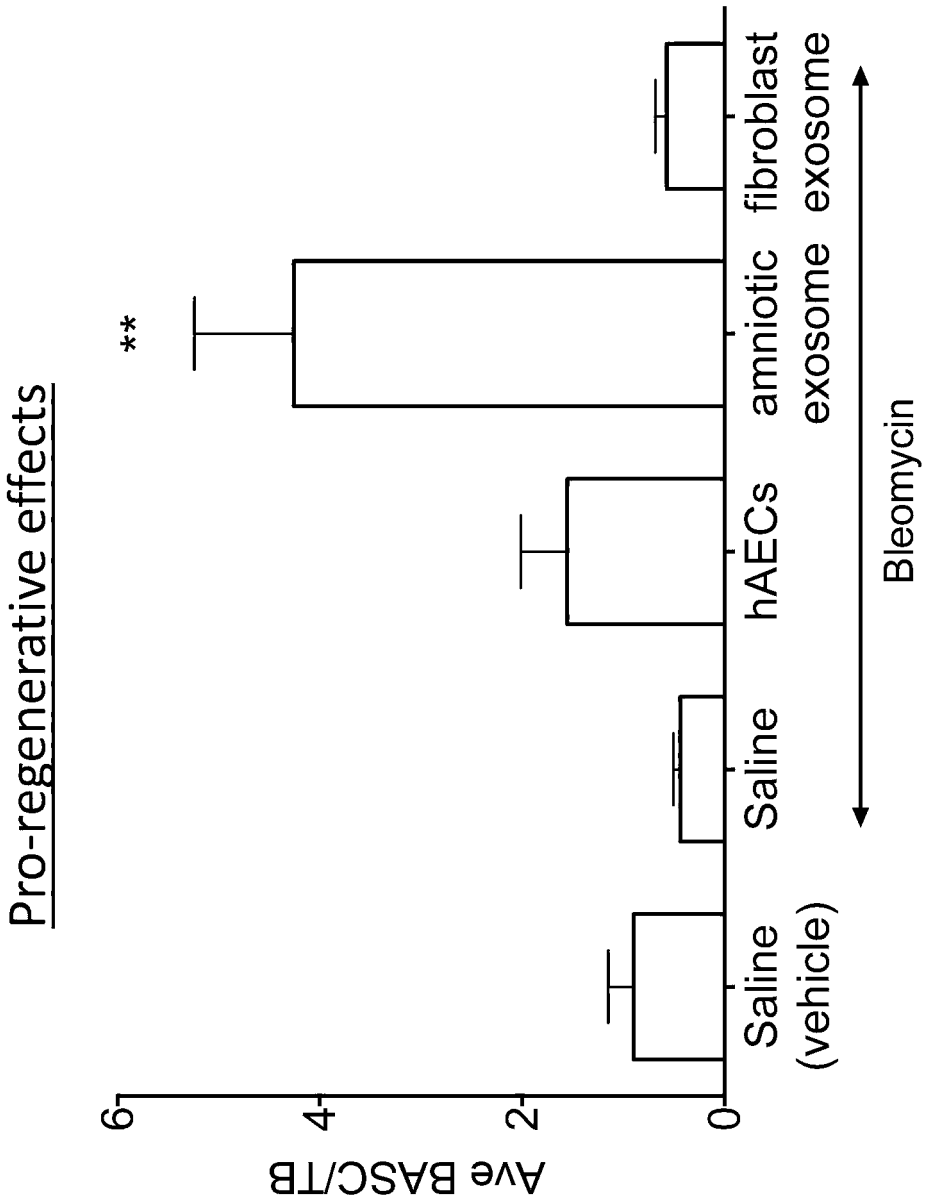
Pro-regenerative effects
**
Ave BASC/TB
0
2
4
6
Saline (vehicle)
Saline
hAECs
amniotic exosome
fibroblast exosome
Bleomycin

Figure 14

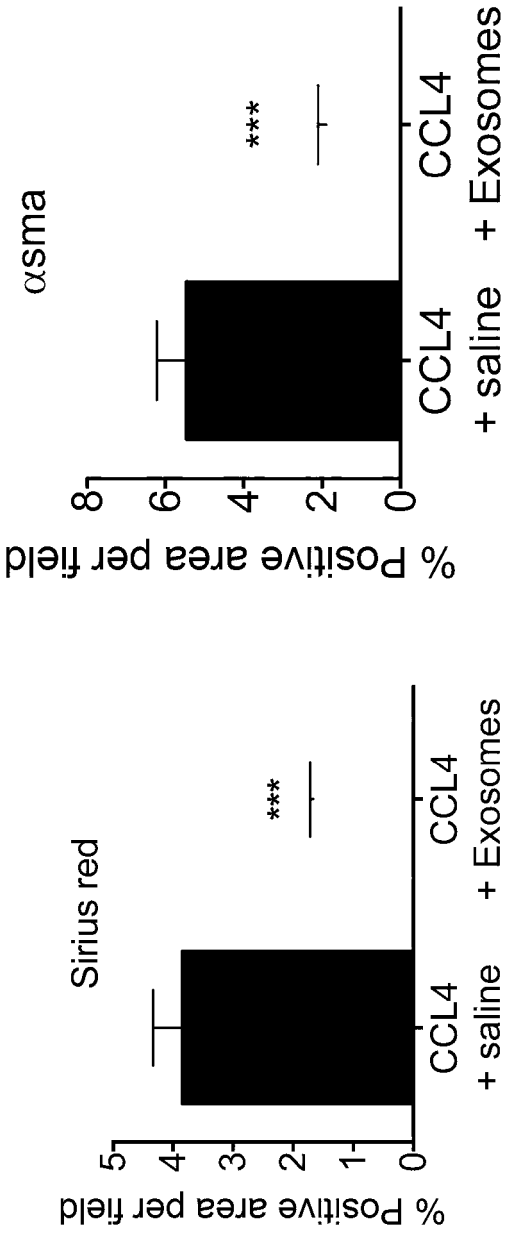
Sirius red
% Positive area per field
0
1
2
3
4
5
***
CCL4
+ saline
CCL4
+ Exosomes
A
αsma
% Positive area per field
0
2
4
6
8
***
CCL4
+ saline
CCL4
+ Exosomes
B

Figure 15

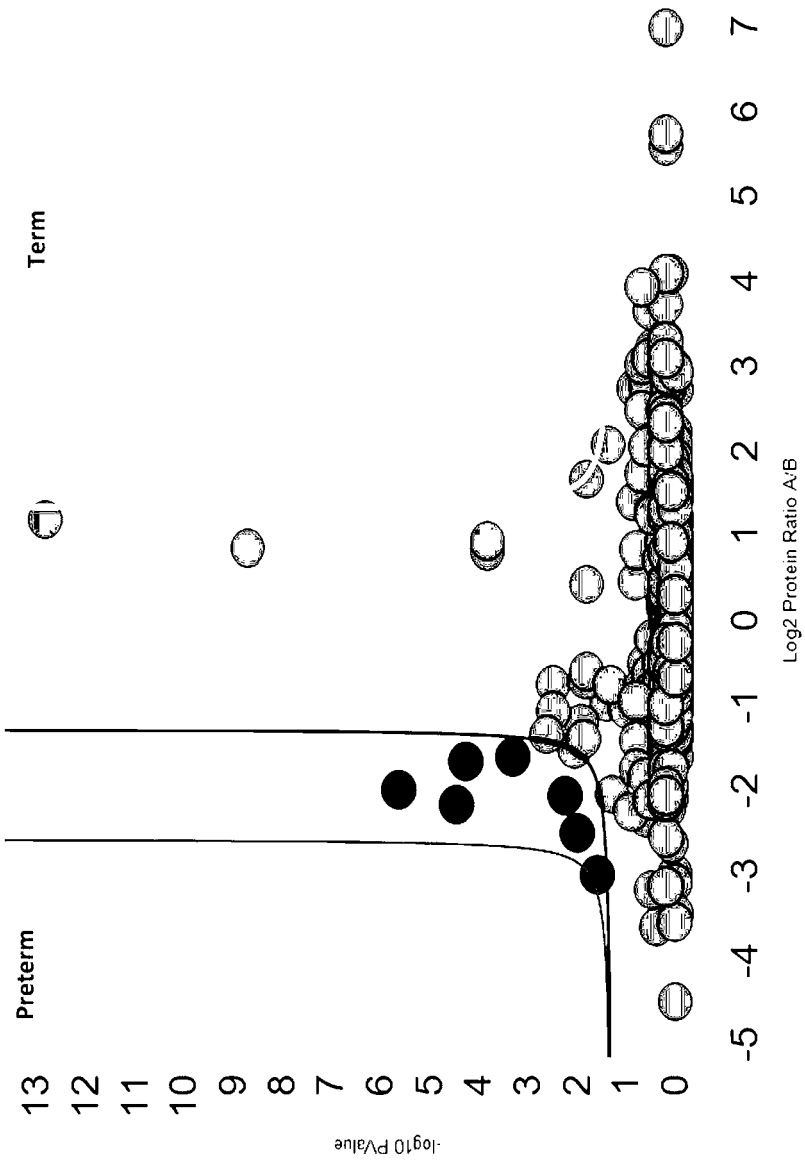
Preterm
Term
-log10 PValue
Log2 Protein Ratio A:B
13
12
11
10
9
8
7
6
5
4
3
2
1
0
-5
-4
-3
-2
-1
0
1
2
3
4
5
6
7

Figure 16

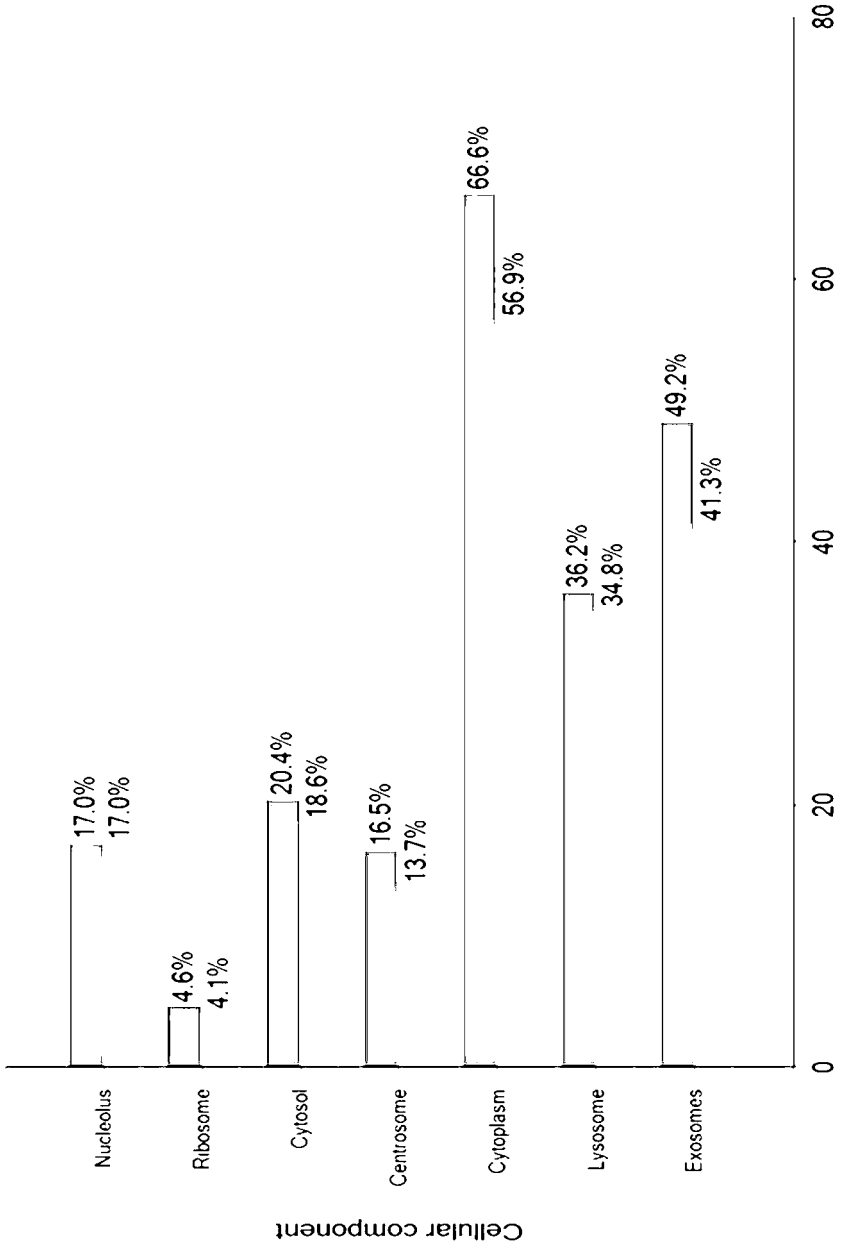
Nucleolus
Ribosome
Cytosol
Centrosome
Cytoplasm
Lysosome
Exosomes
17.0%
17.0%
4.6%
4.1%
20.4%
18.6%
16.5%
13.7%
66.6%
56.9%
36.2%
34.8%
49.2%
41.3%
0
20
40
60
80
Percentage of genes
Cellular component

Figure 17

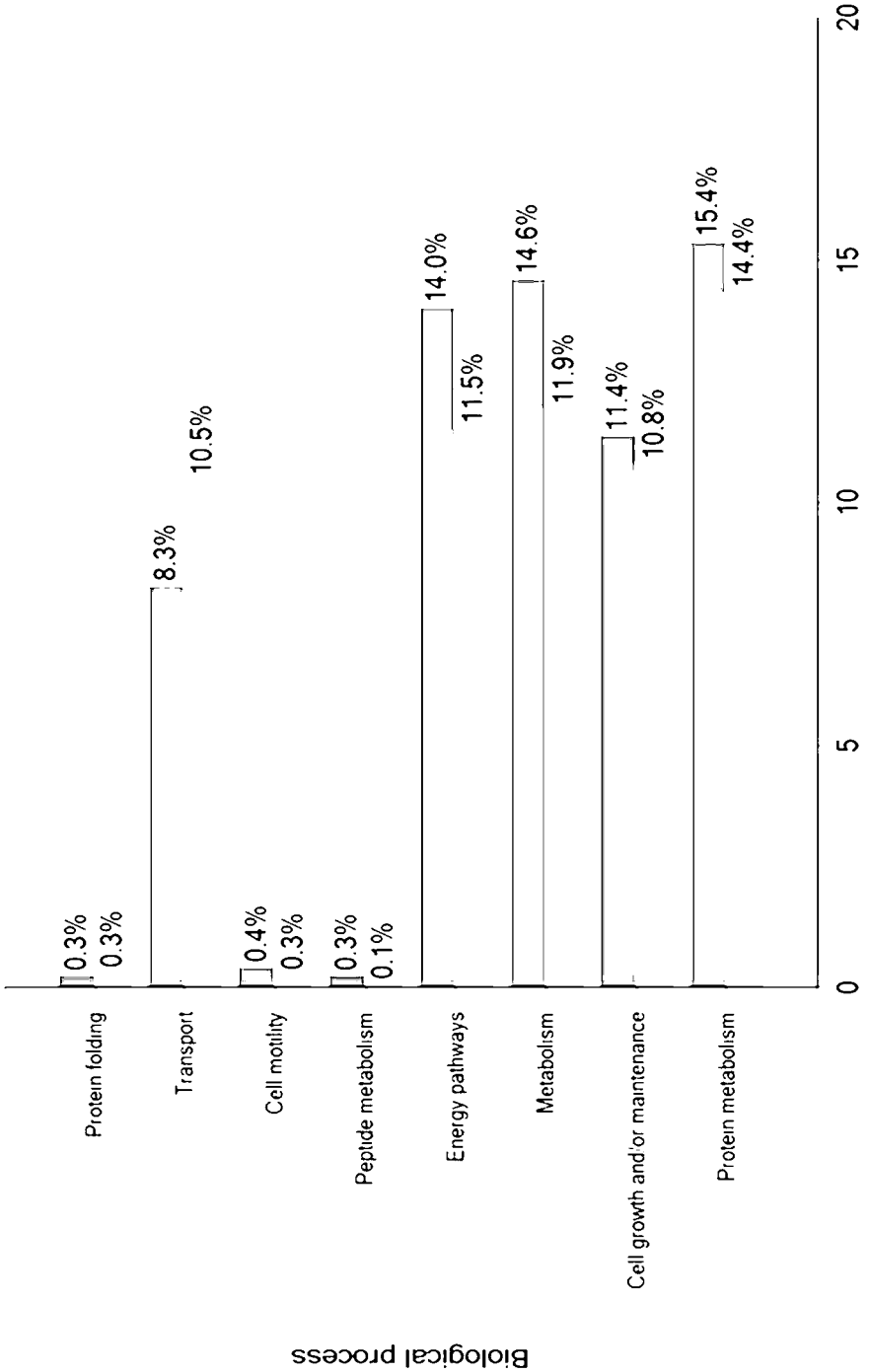
Protein folding
0.3%
0.3%
Transport
8.3%
10.5%
Cell motility
0.4%
0.3%
Peptide metabolism
0.3%
0.1%
Energy pathways
14.0%
11.5%
Metabolism
14.6%
11.9%
Cell growth and/or maintenance
11.4%
10.8%
Protein metabolism
15.4%
14.4%
0
5
10
15
20
Percentage of genes
Biological process

Figure 18