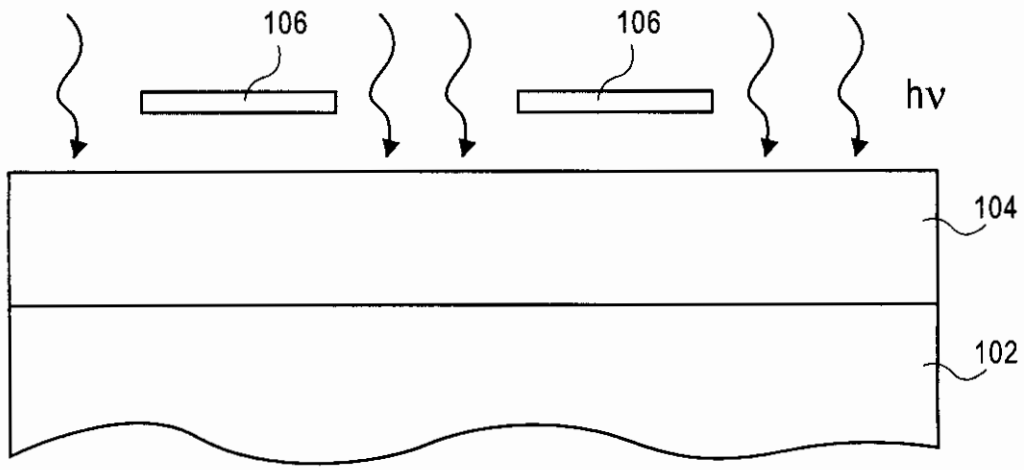

FIG. 1A
(PRIOR ART)

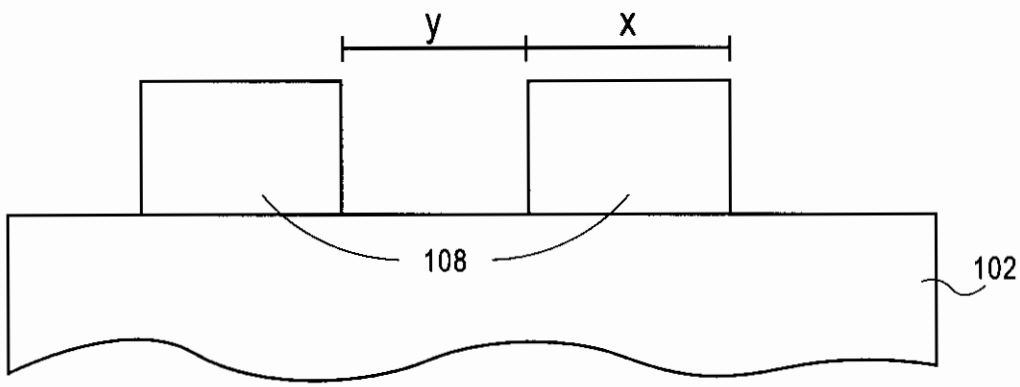

FIG. 1B
(PRIOR ART)

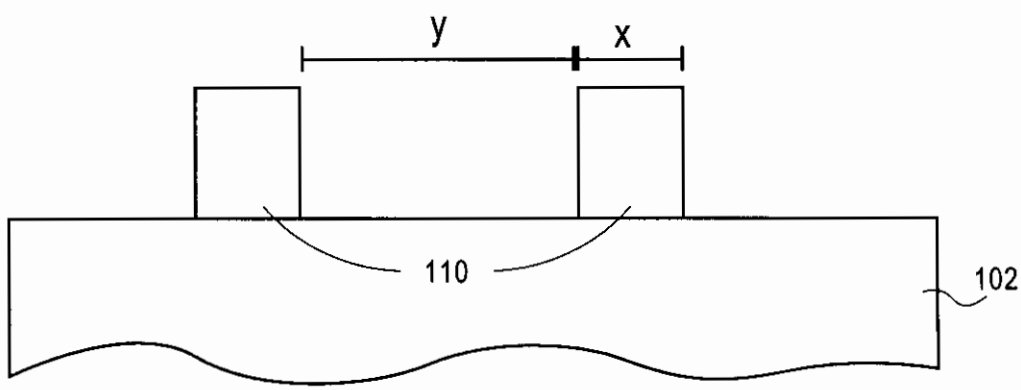

FIG. 1C
(PRIOR ART)

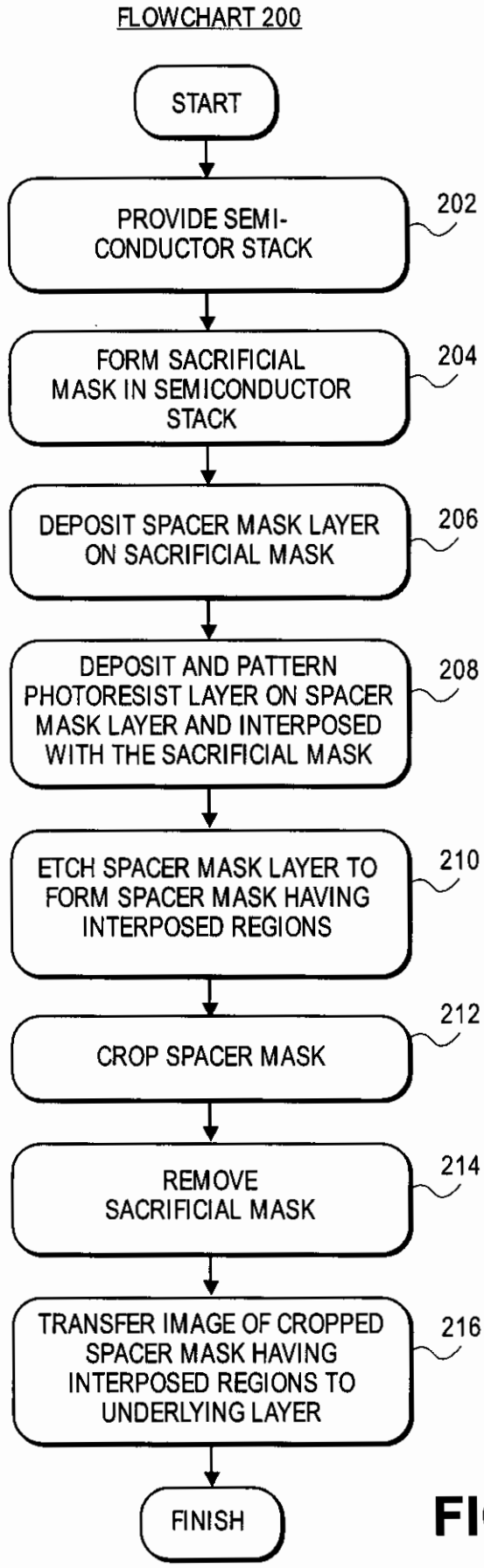
FLOWCHART 200
START
PROVIDE SEMI-CONDUCTOR STACK
202
FORM SACRIFICIAL MASK IN SEMICONDUCTOR STACK
204
DEPOSIT SPACER MASK LAYER ON SACRIFICIAL MASK
206
DEPOSIT AND PATTERN PHOTORESIST LAYER ON SPACER MASK LAYER AND INTERPOSED WITH THE SACRIFICIAL MASK
208
ETCH SPACER MASK LAYER TO FORM SPACER MASK HAVING INTERPOSED REGIONS
210
CROP SPACER MASK
212
REMOVE SACRIFICIAL MASK
214
TRANSFER IMAGE OF CROPPED SPACER MASK HAVING INTERPOSED REGIONS TO UNDERLYING LAYER
216
FINISH

FIG. 2

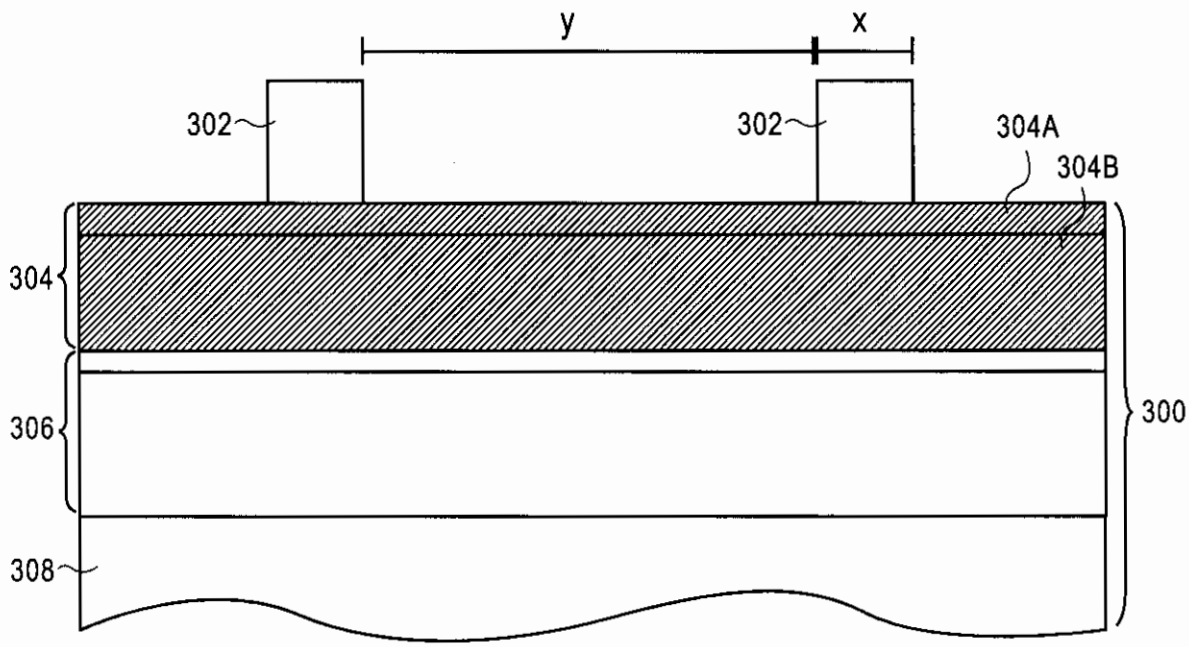
y
x
302
302
304A
304B
304
306
300
308

FIG. 3A

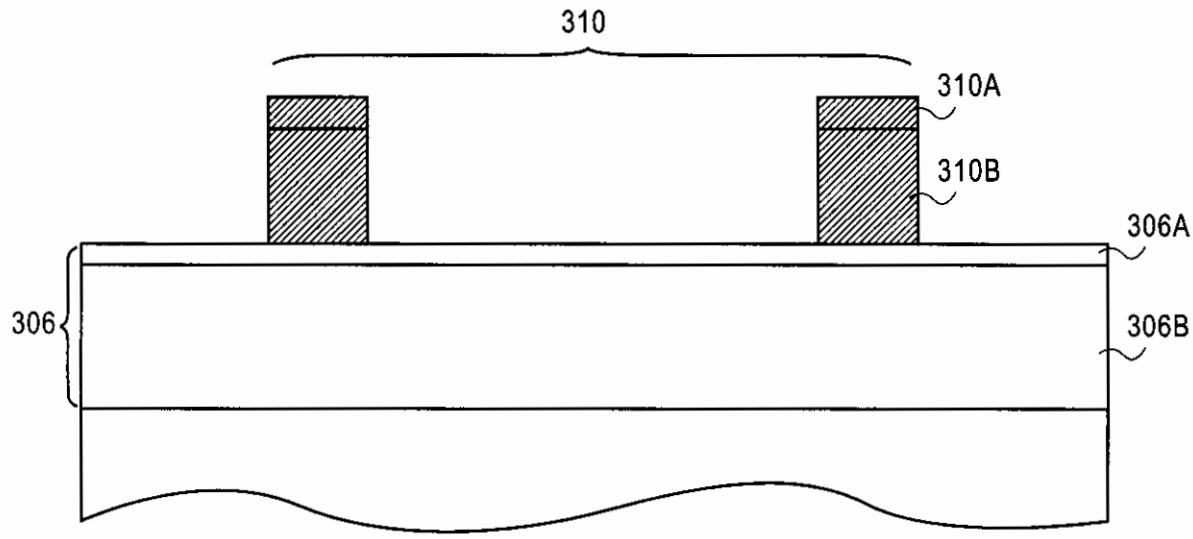
310
310A
310B
306A
306
306B

FIG. 3B

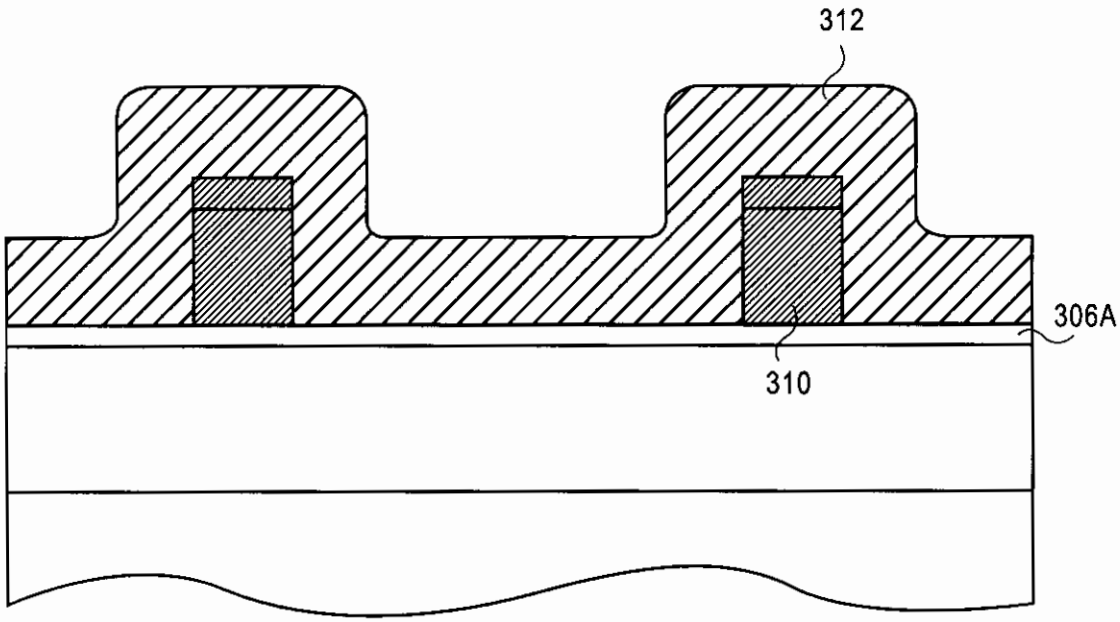

FIG. 3C

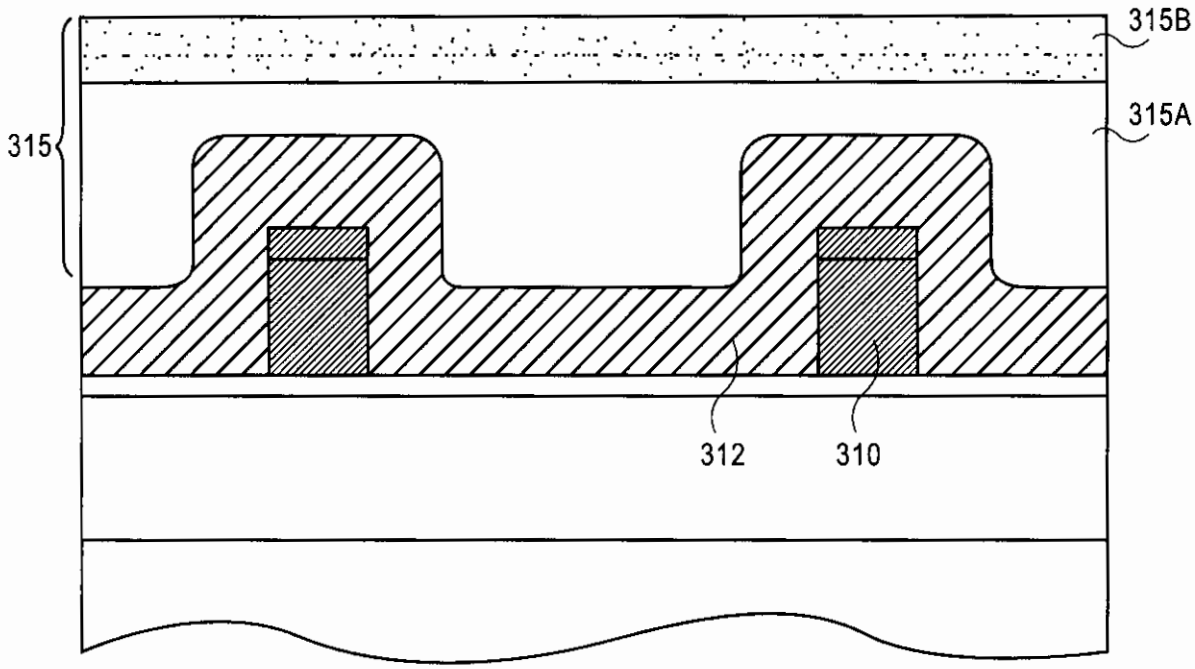

FIG. 3D

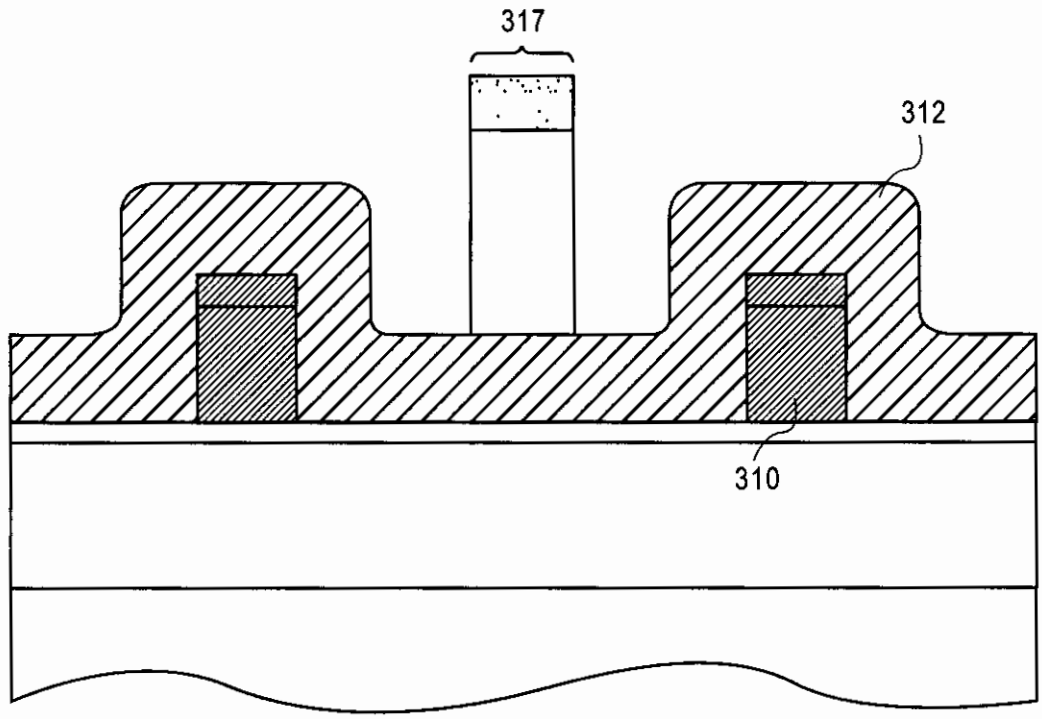

FIG. 3E

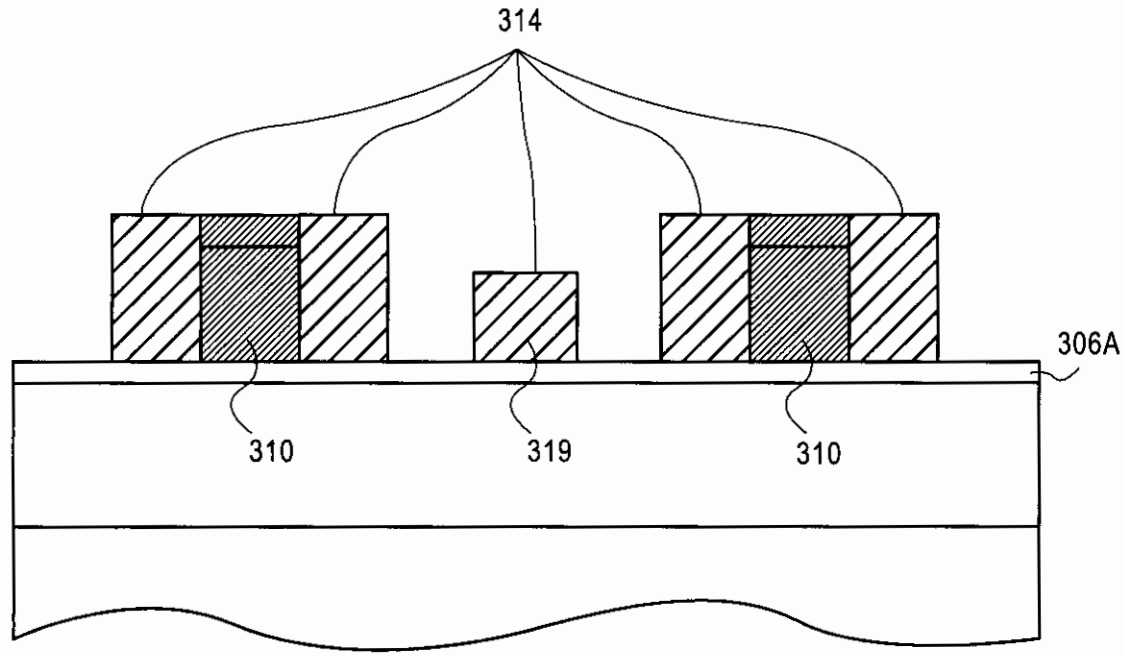

FIG. 3F

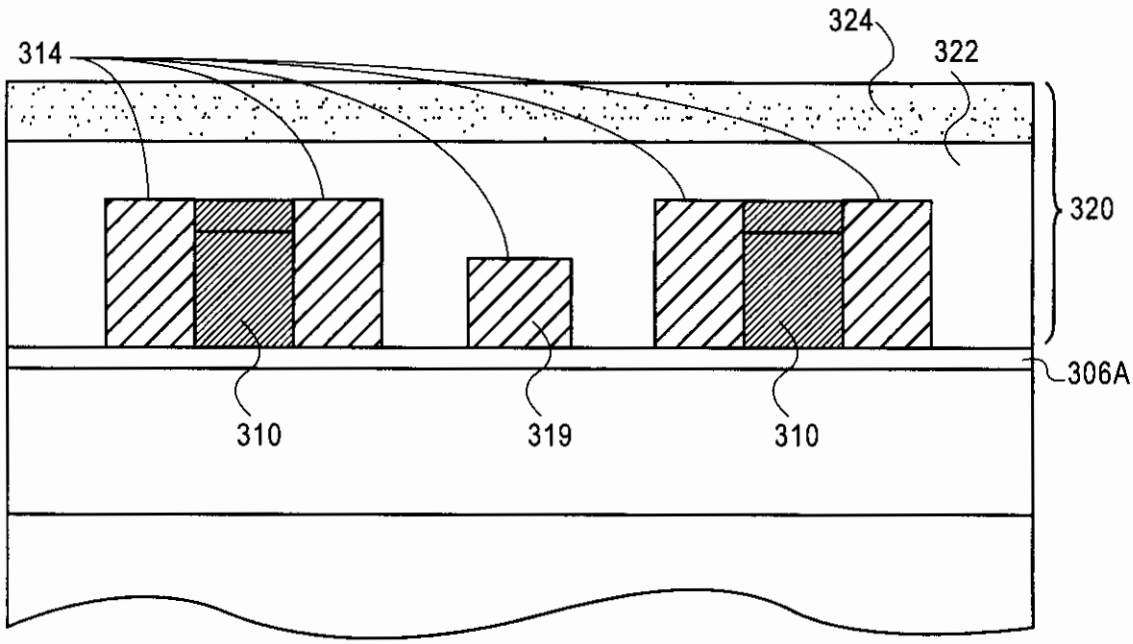

FIG. 3G

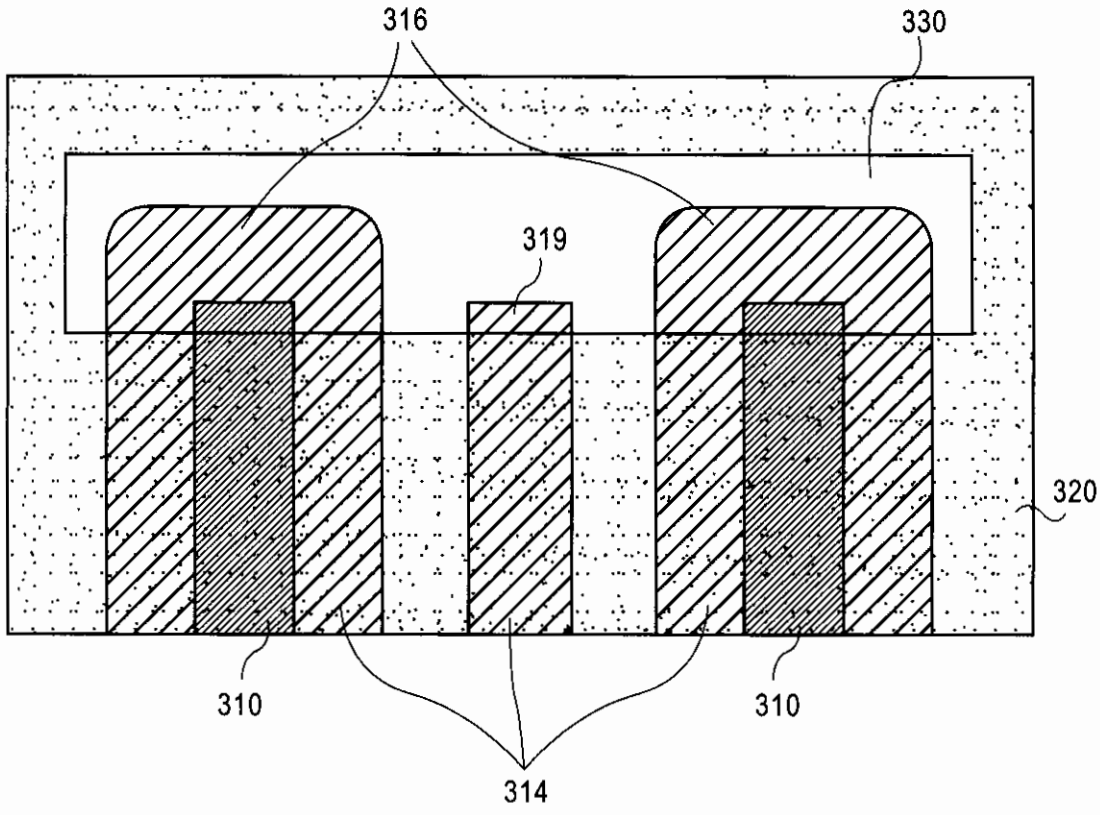

FIG. 3G'

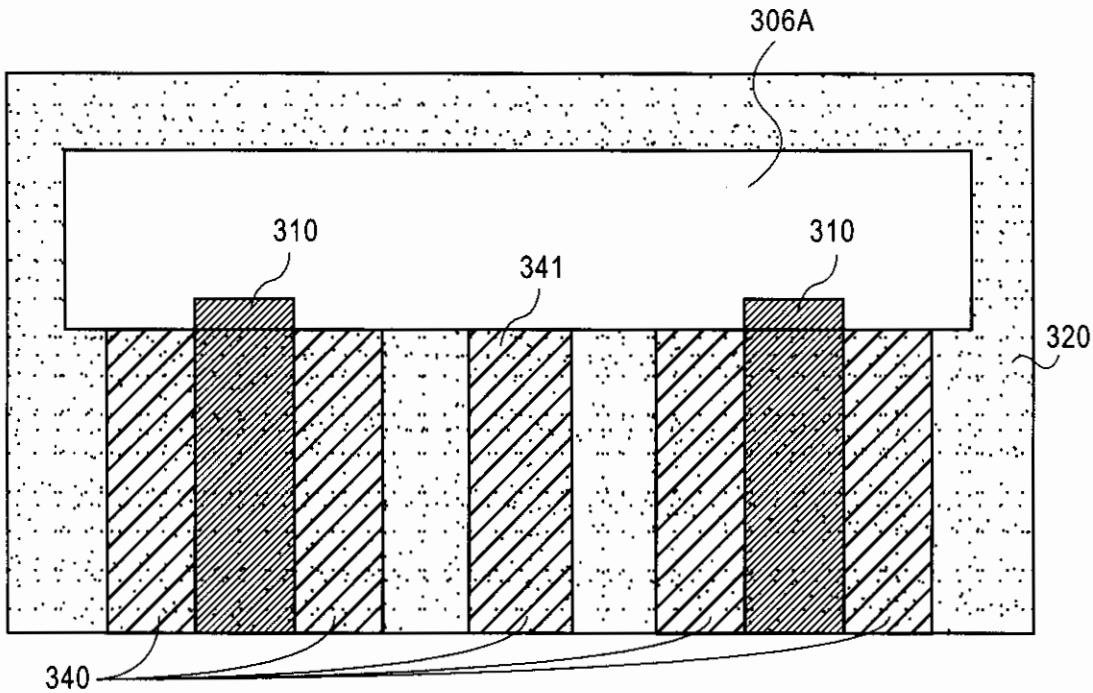

FIG. 3H

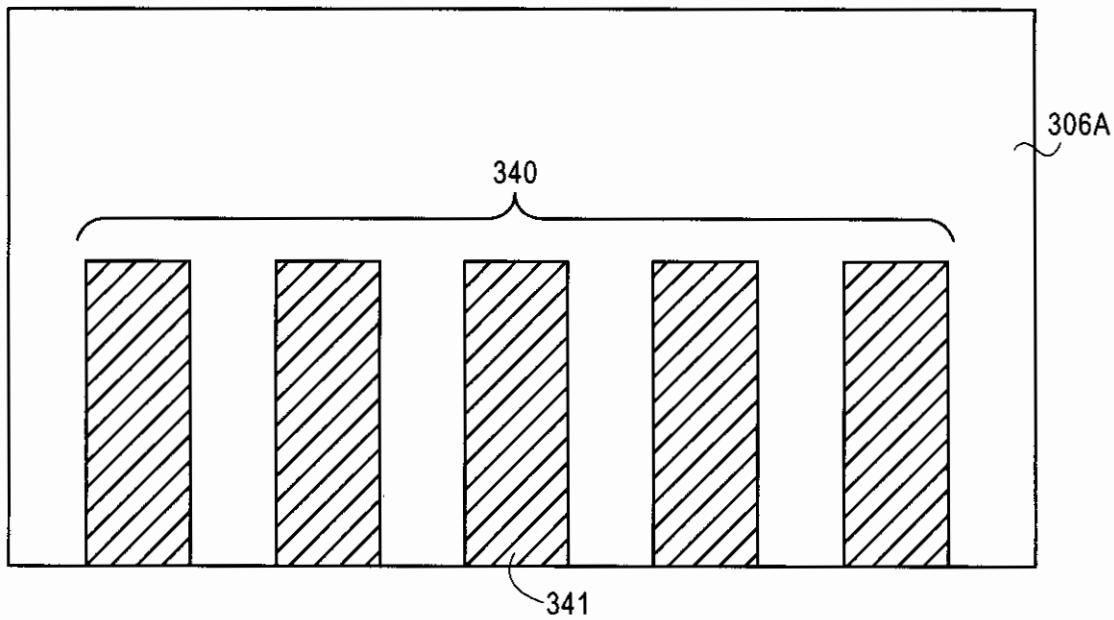

FIG. 3I

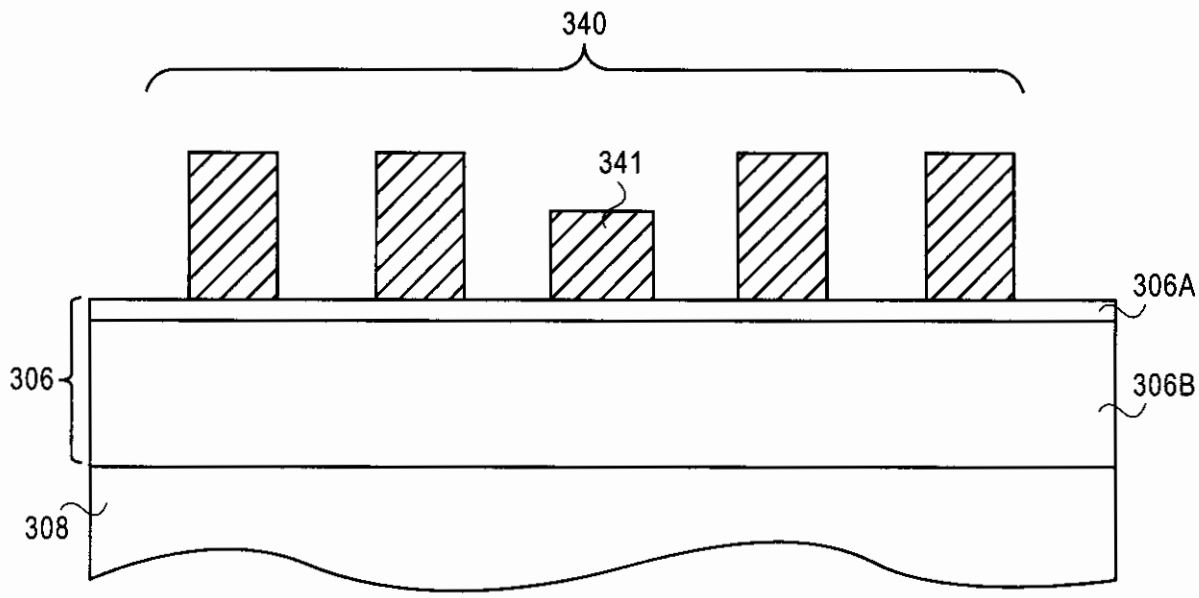

FIG. 3I'

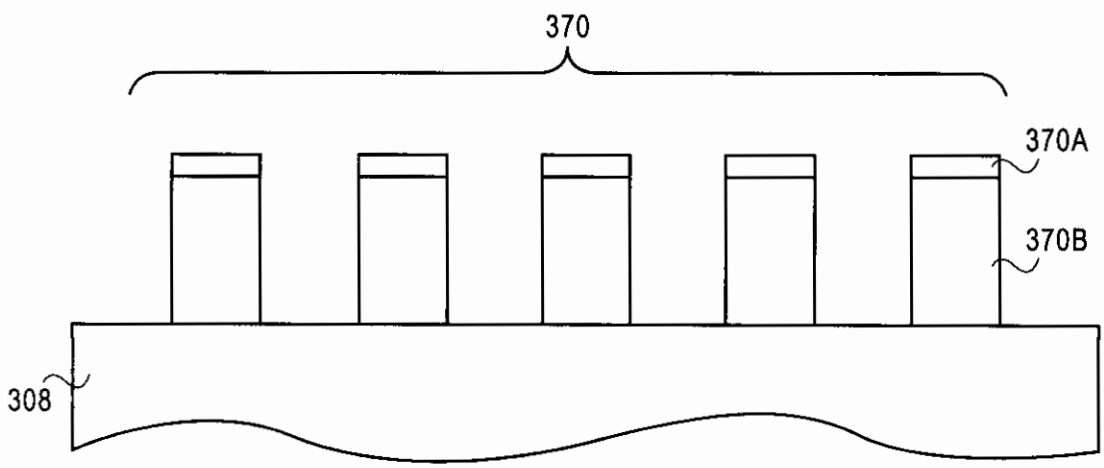

FIG. 3J

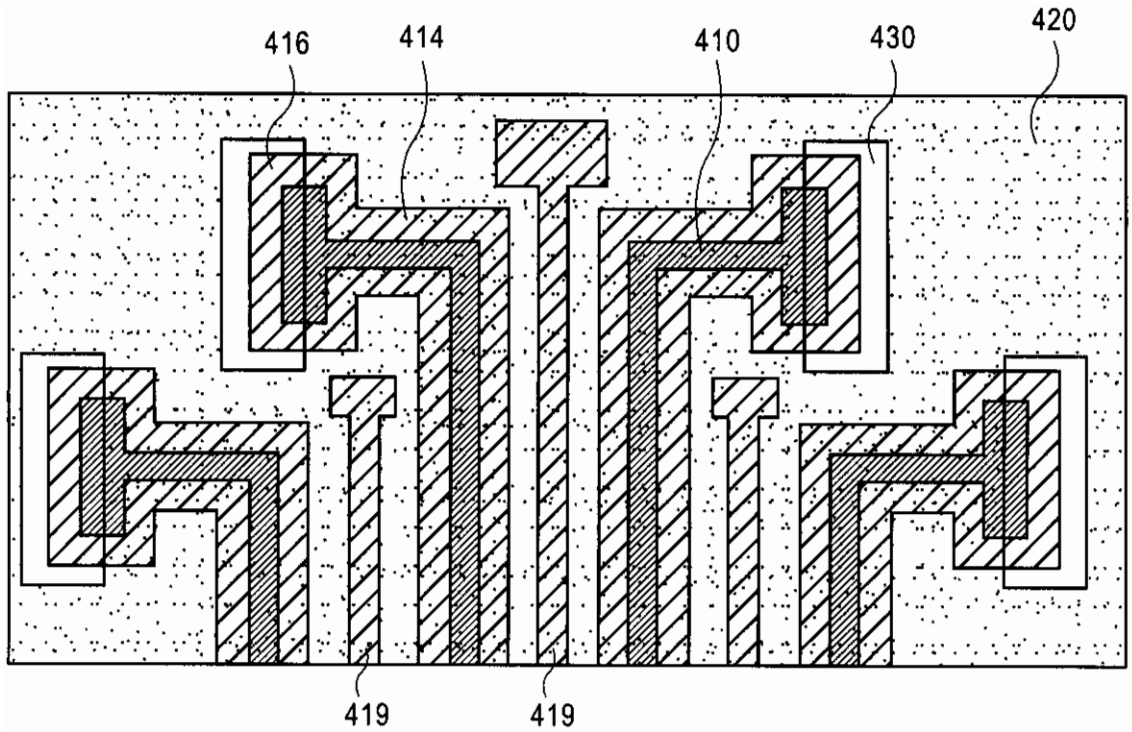

FIG. 4A

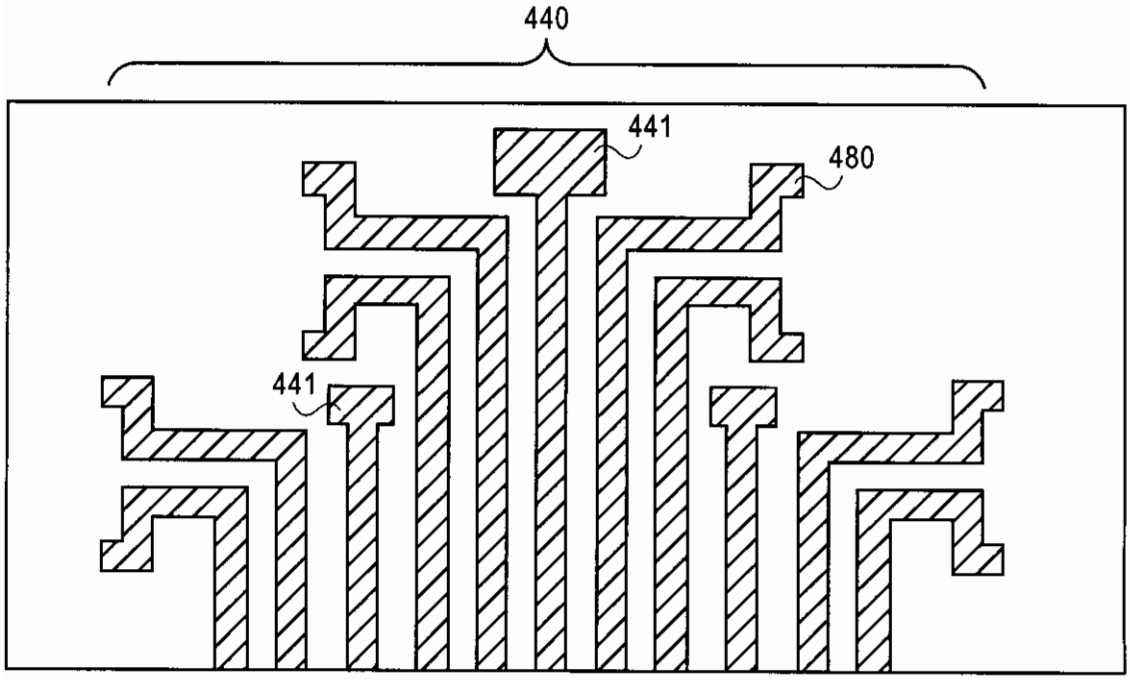

FIG. 4B

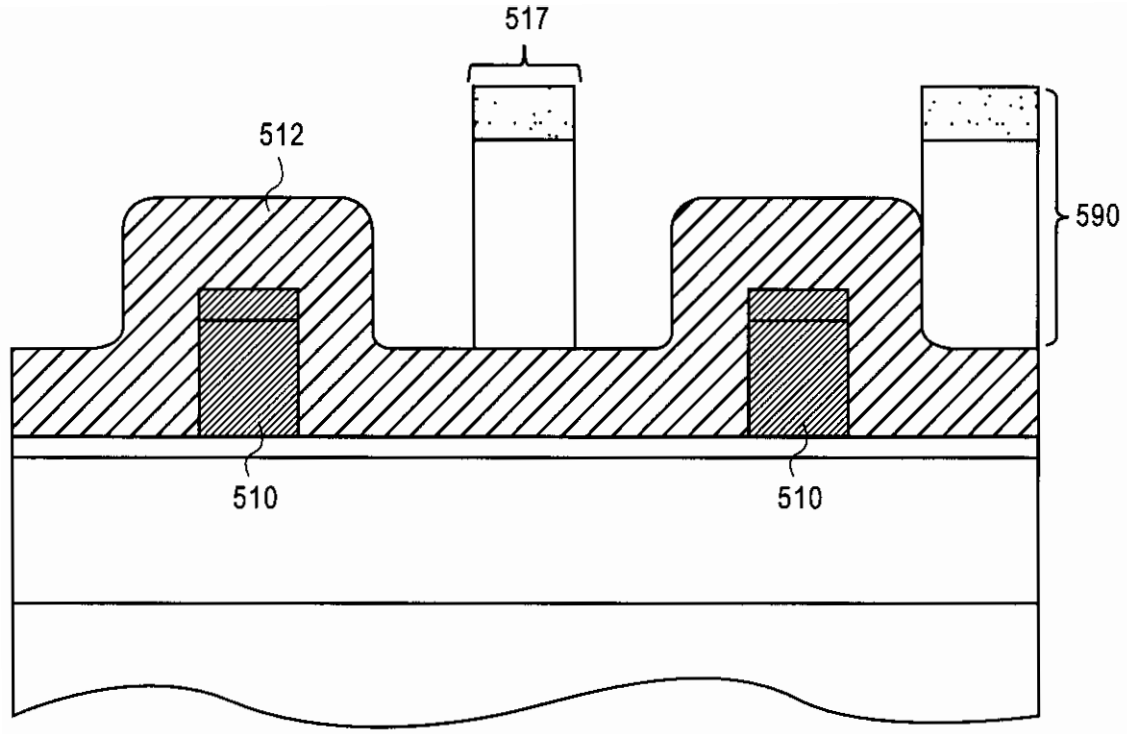

FIG. 5A

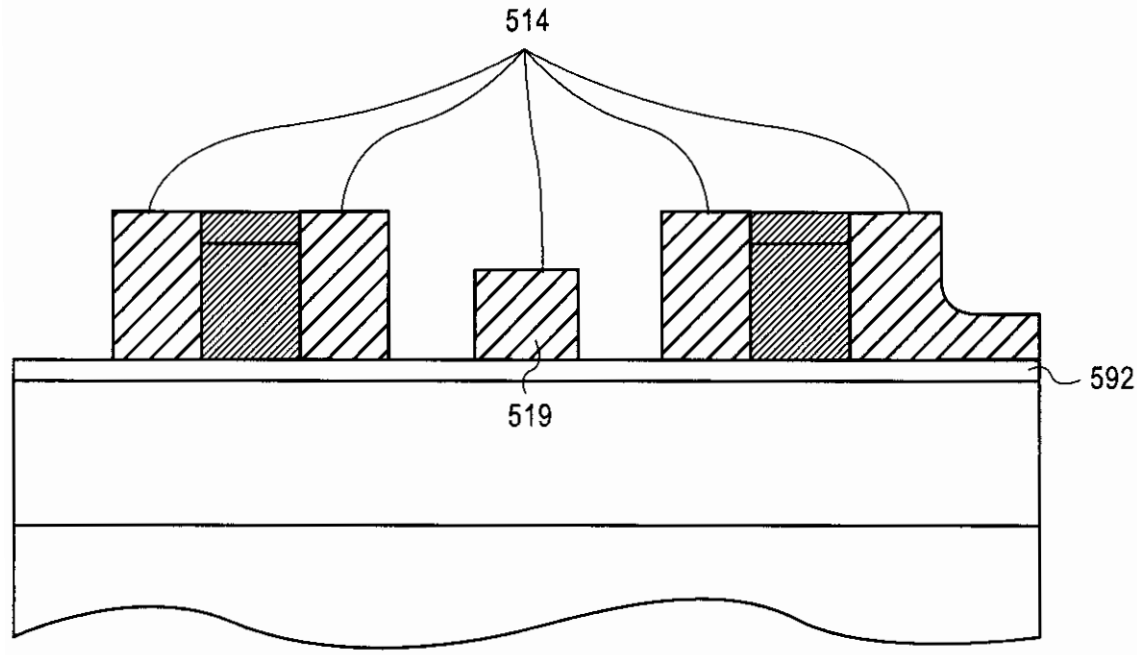

FIG. 5B

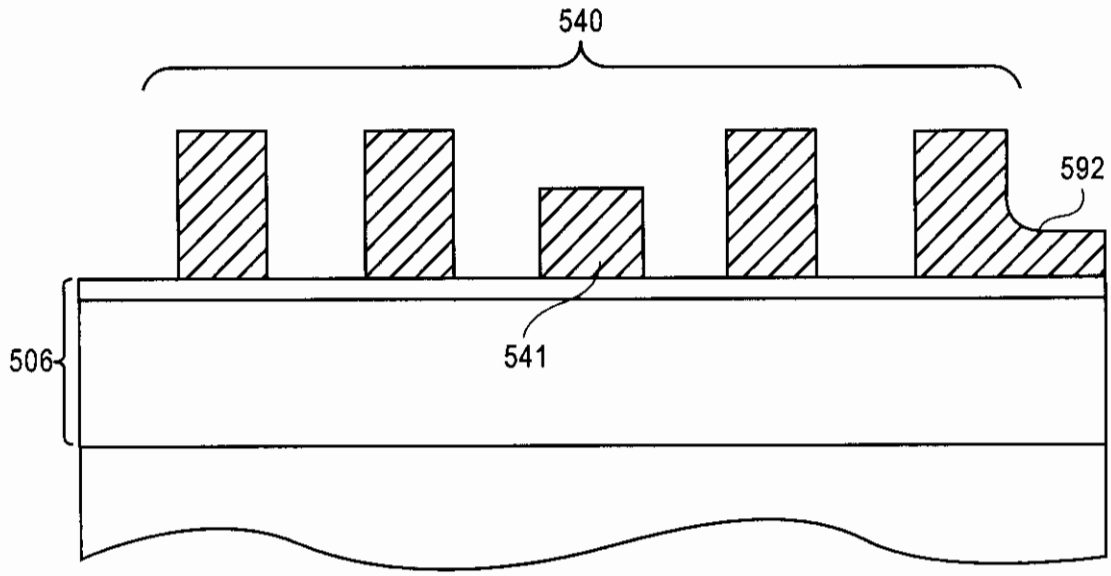

FIG. 5C

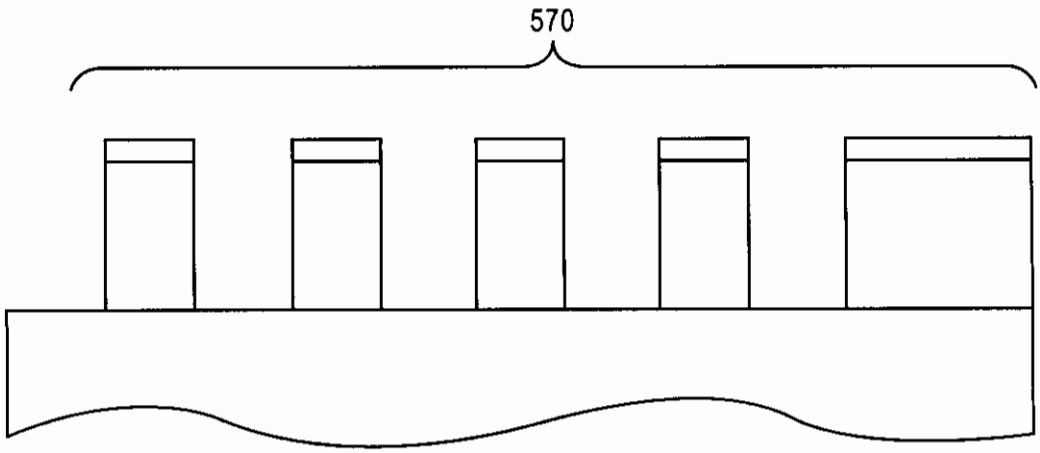

FIG. 5D

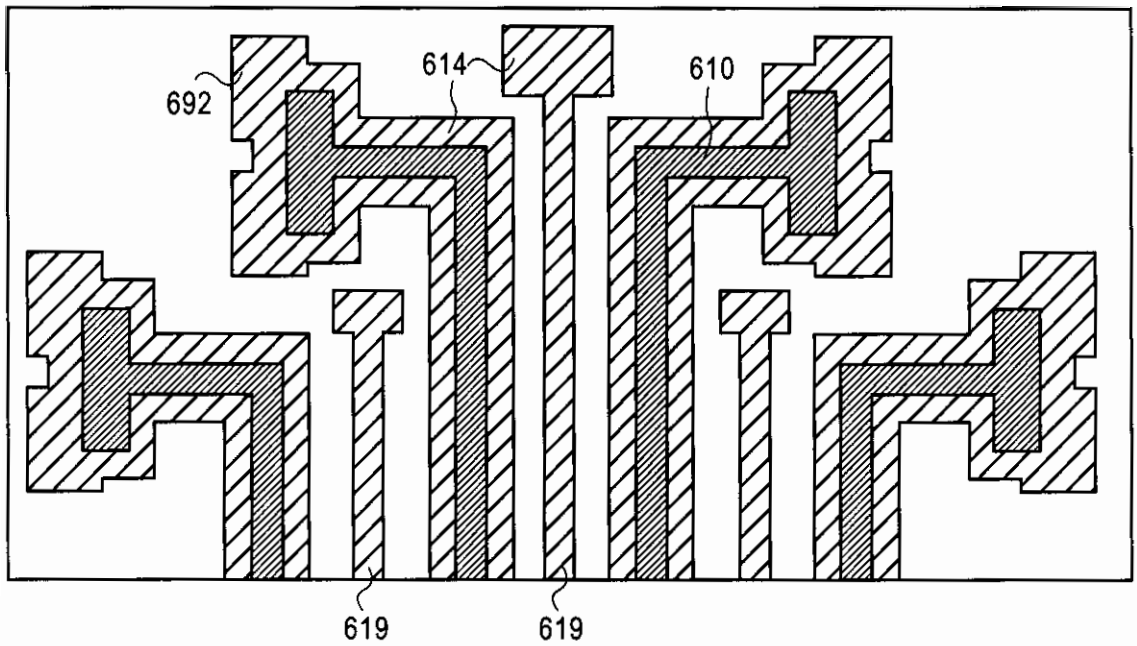

FIG. 6A

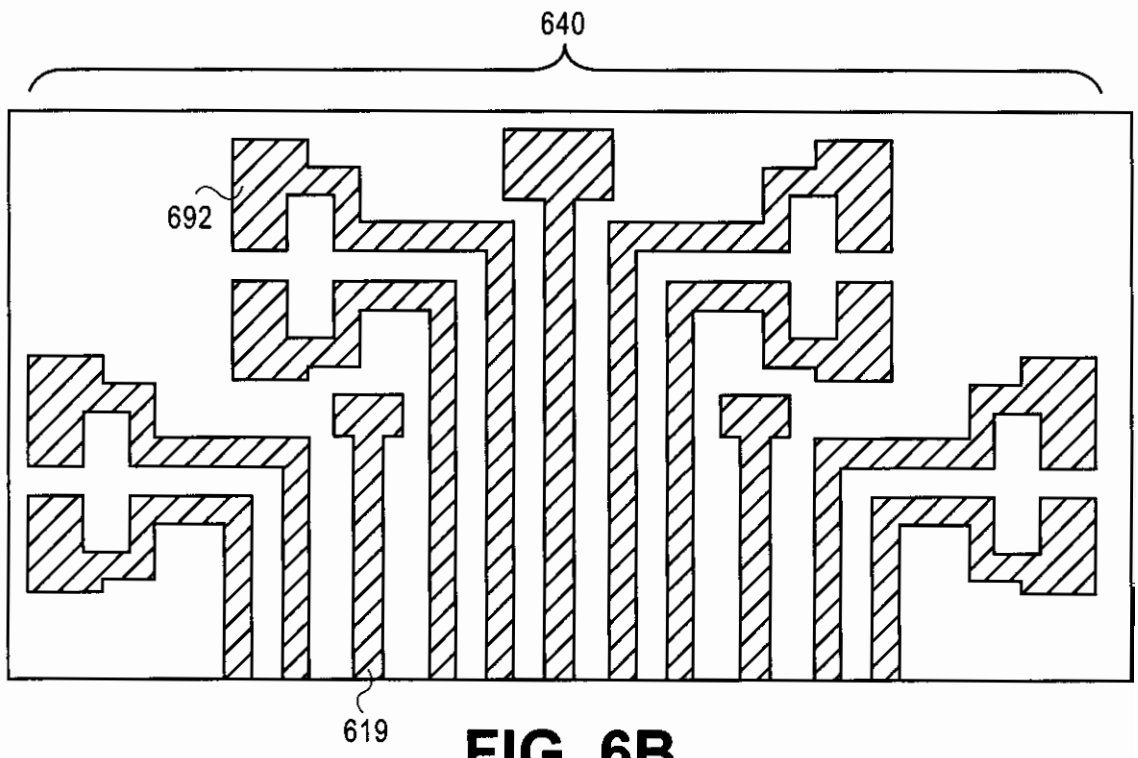

FIG. 6B