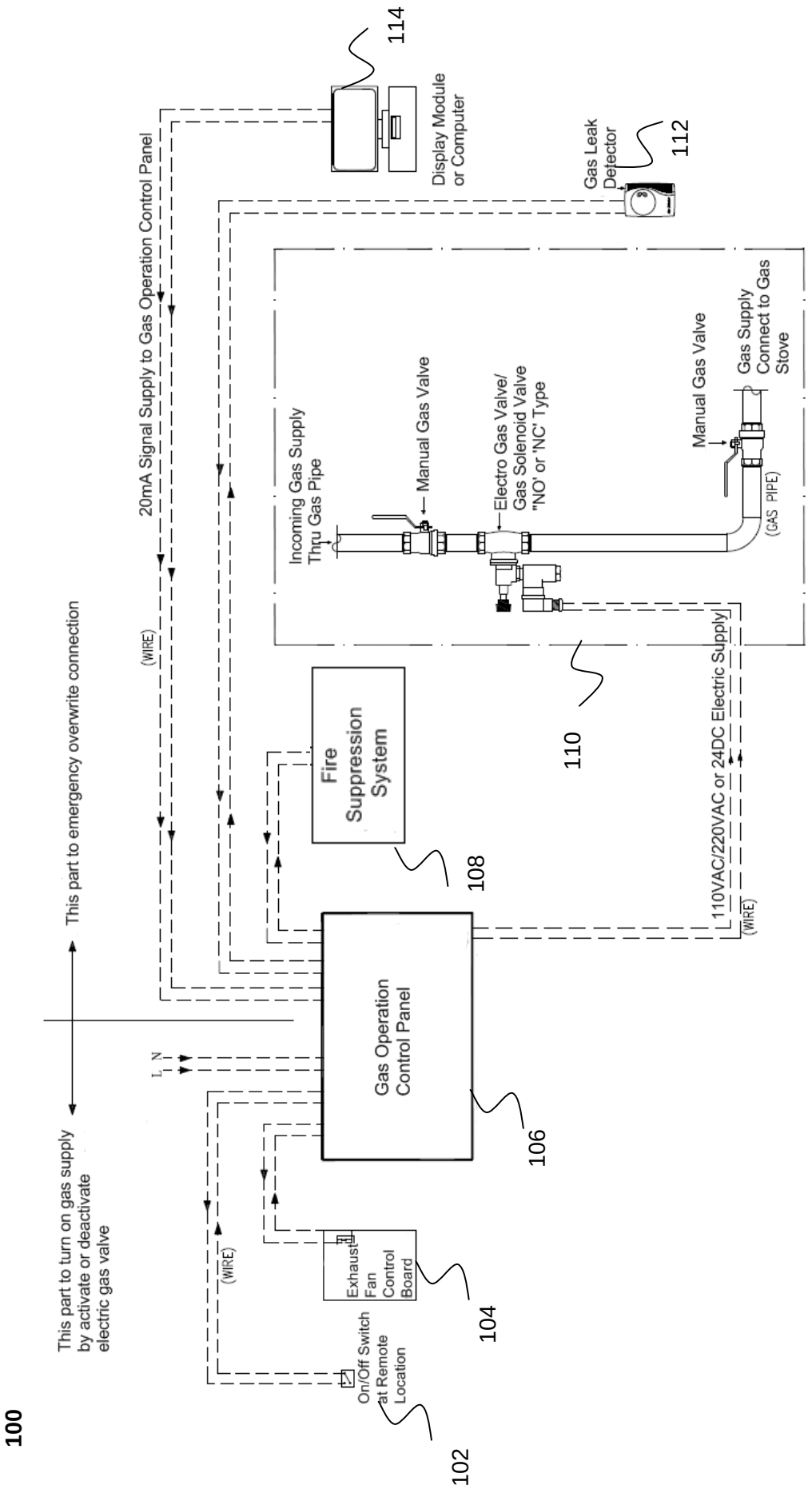
100
This part to turn on gas supply by activate or deactivate electric gas valve
This part to emergency overwrite connection
L N
(WIRE)
On/Off Switch at Remote Location
102
Exhaust Fan Control Board
104
Gas Operation Control Panel
106
Fire Suppression System
108
110
110VAC/220VAC or 24DC Electric Supply
(WIRE)
20mA Signal Supply to Gas Operation Control Panel
(WIRE)
Incoming Gas Supply Thru Gas Pipe
Manual Gas Valve
Electro Gas Valve/ Gas Solenoid Valve "NO' or 'NC' Type
Manual Gas Valve
Gas Supply Connect to Gas Stove
(GAS PIPE)
Gas Leak Detector
112
Display Module or Computer
114

FIG. 1

200

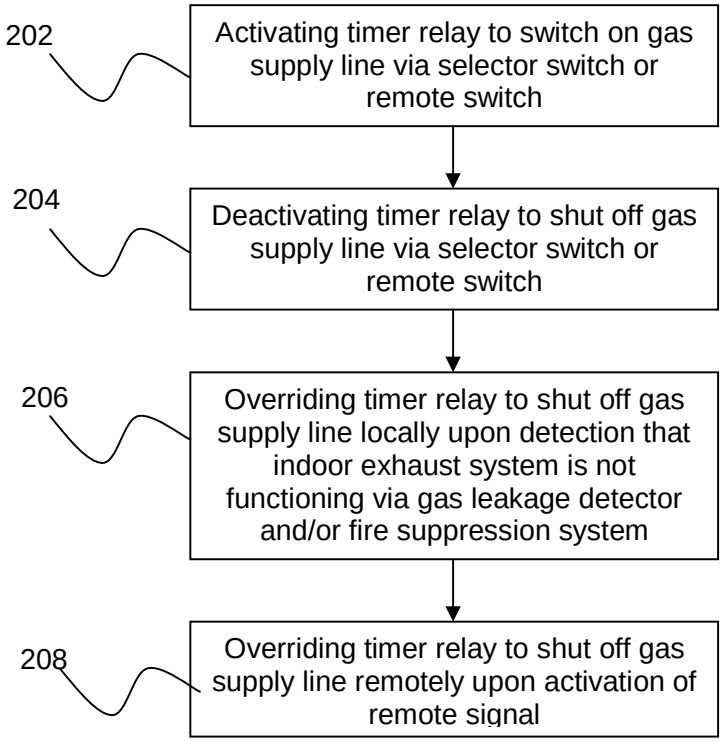

FIG. 2

300

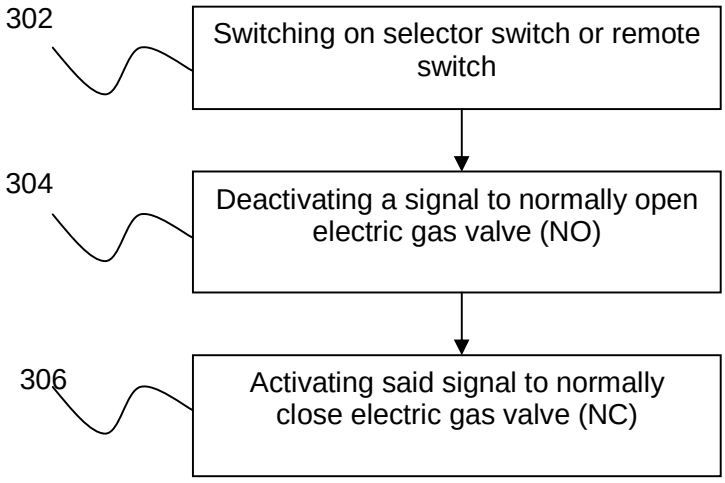

FIG. 3

400

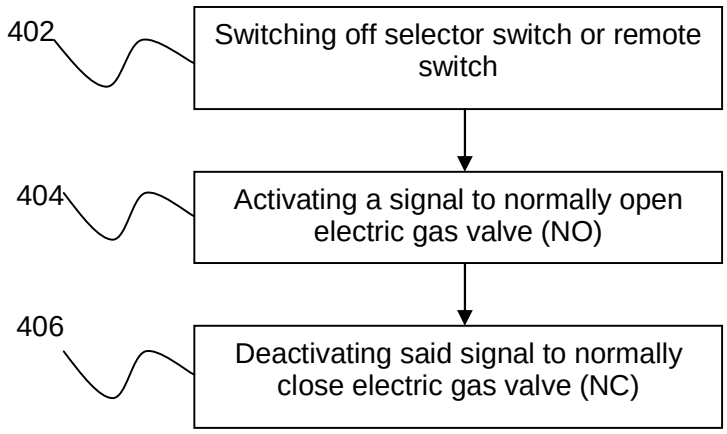

FIG. 4

500

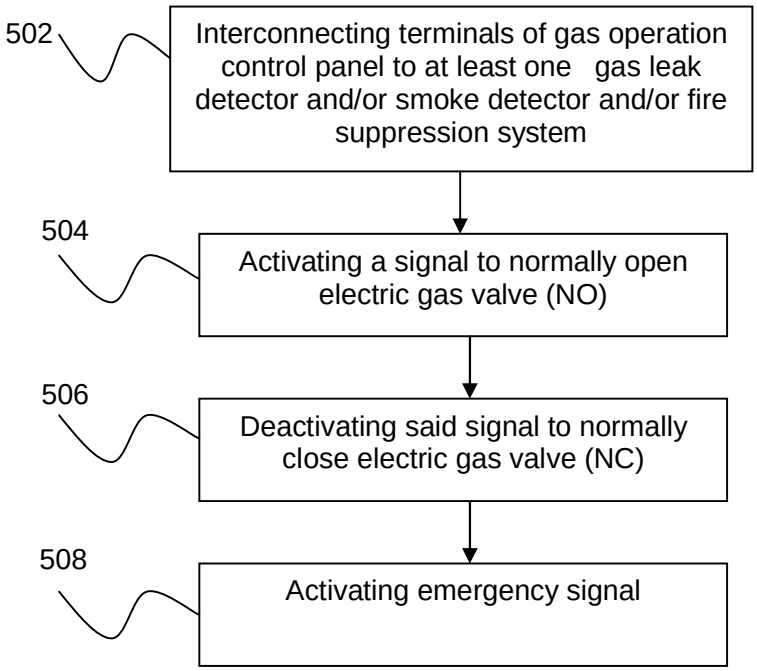

FIG. 5

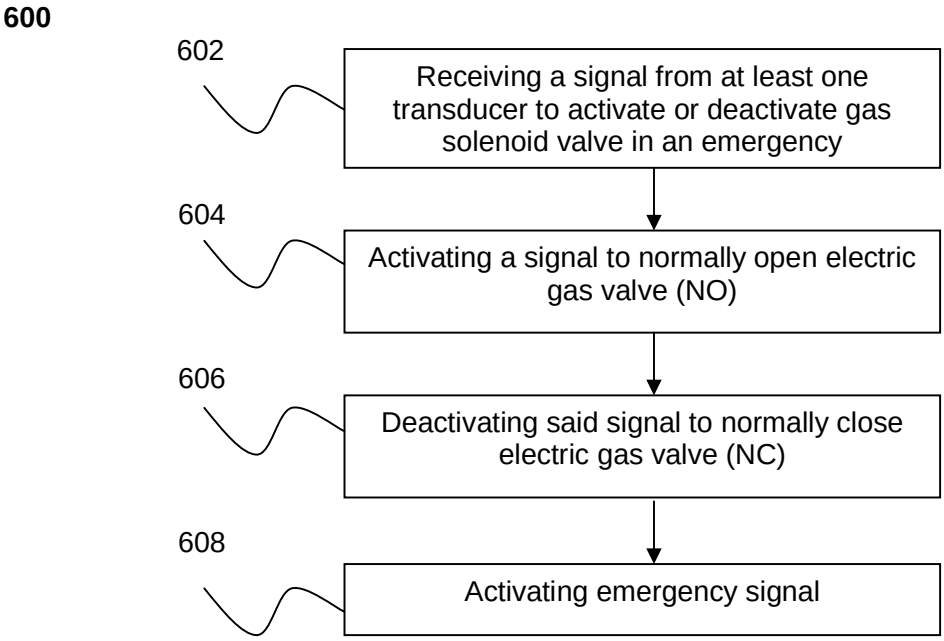
600
602
Receiving a signal from at least one transducer to activate or deactivate gas solenoid valve in an emergency
604
Activating a signal to normally open electric gas valve (NO)
606
Deactivating said signal to normally close electric gas valve (NC)
608
Activating emergency signal

FIG. 6