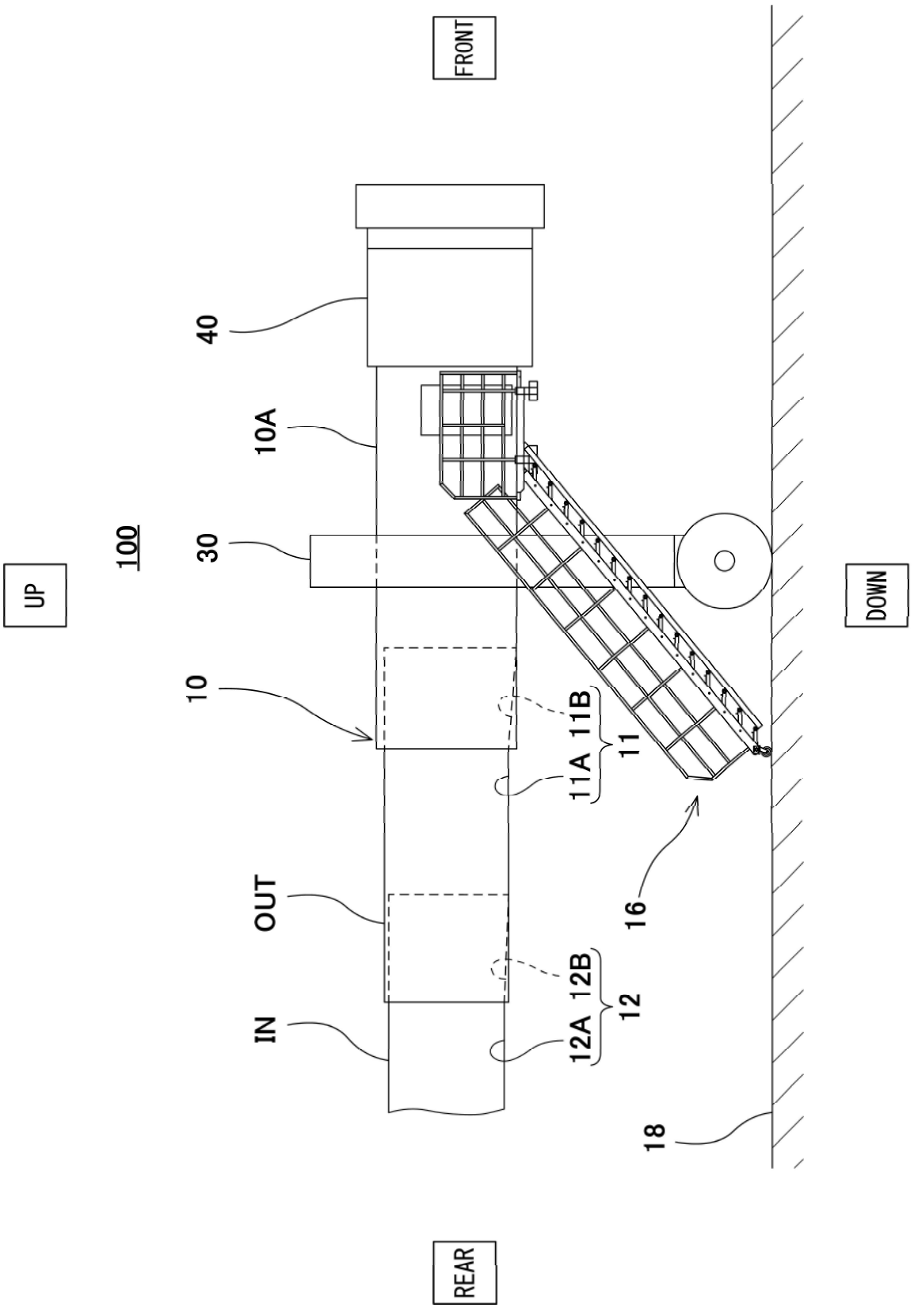
FRONT
UP
100
40
10A
30
10
11A
11B
11
OUT
IN
12A
12B
12
16
18
DOWN
REAR

FIG.1

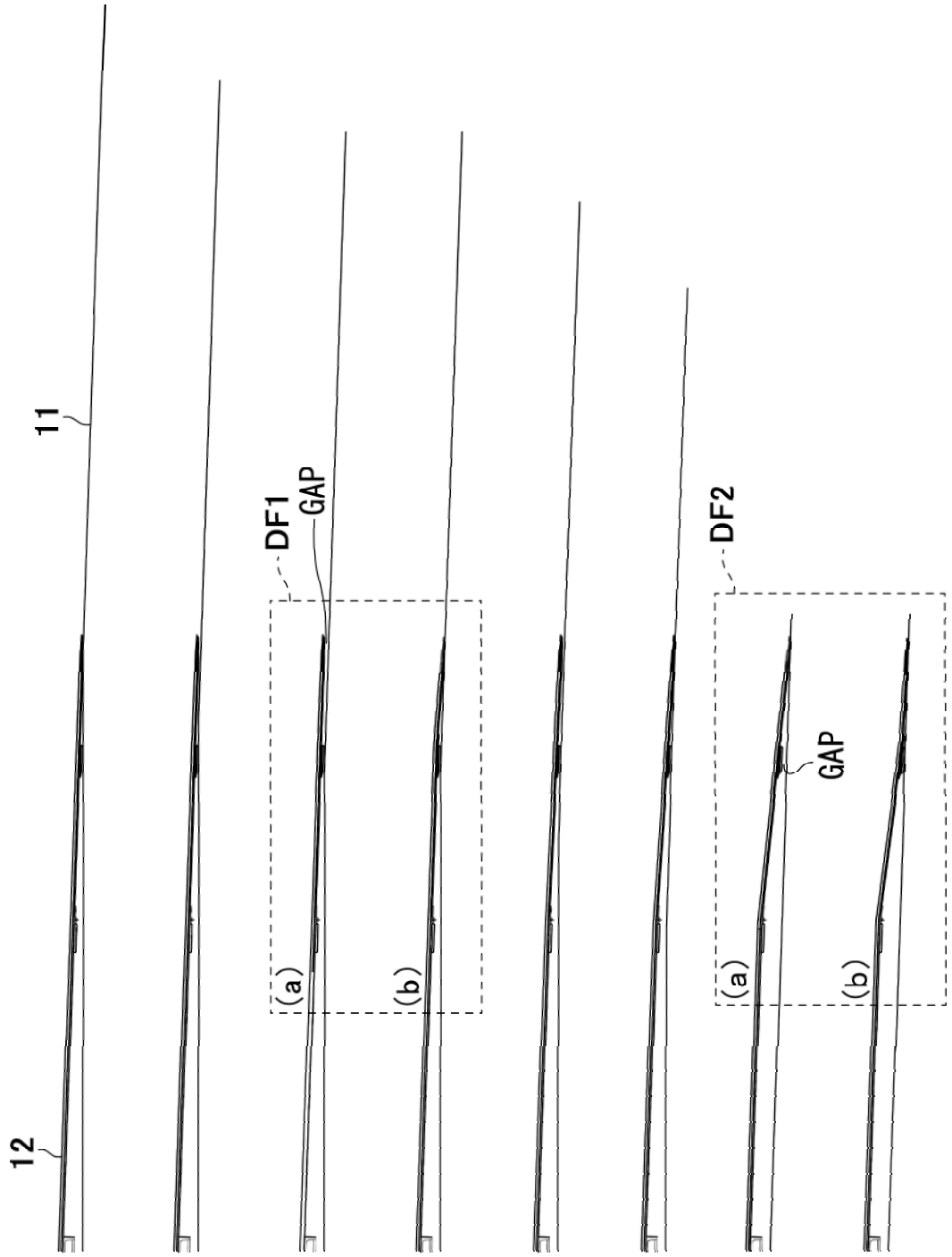

FIG.2

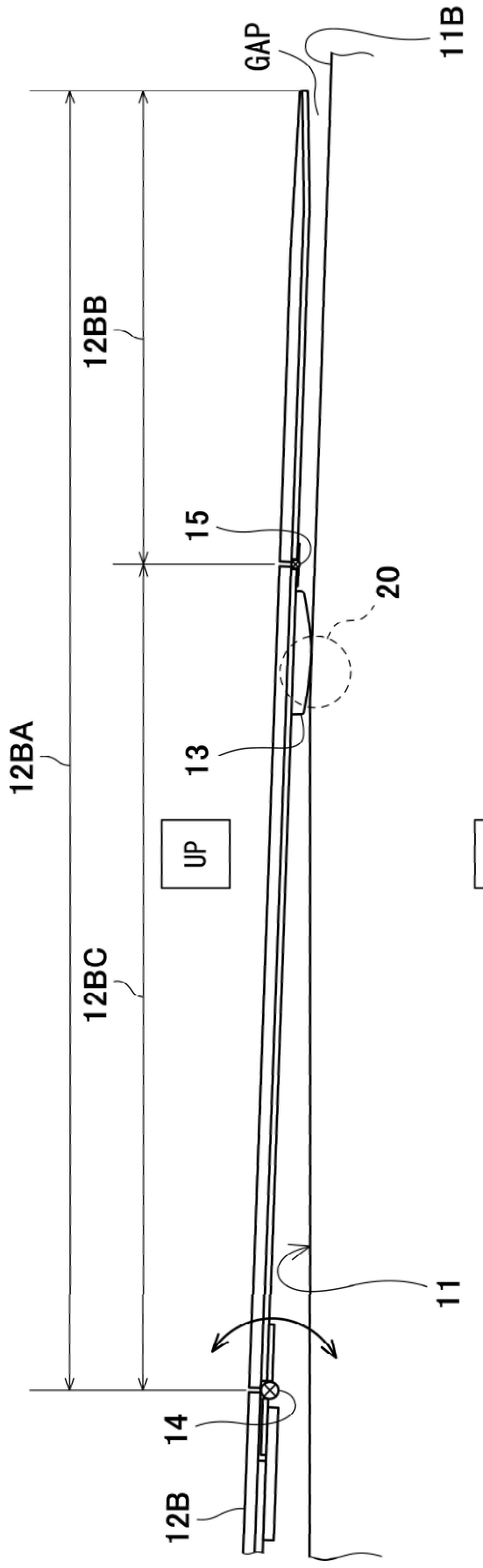
GAP
11B
12BB
15
20
12BA
13
UP
12BC
11
14
12B
DOWN

FIG.3A

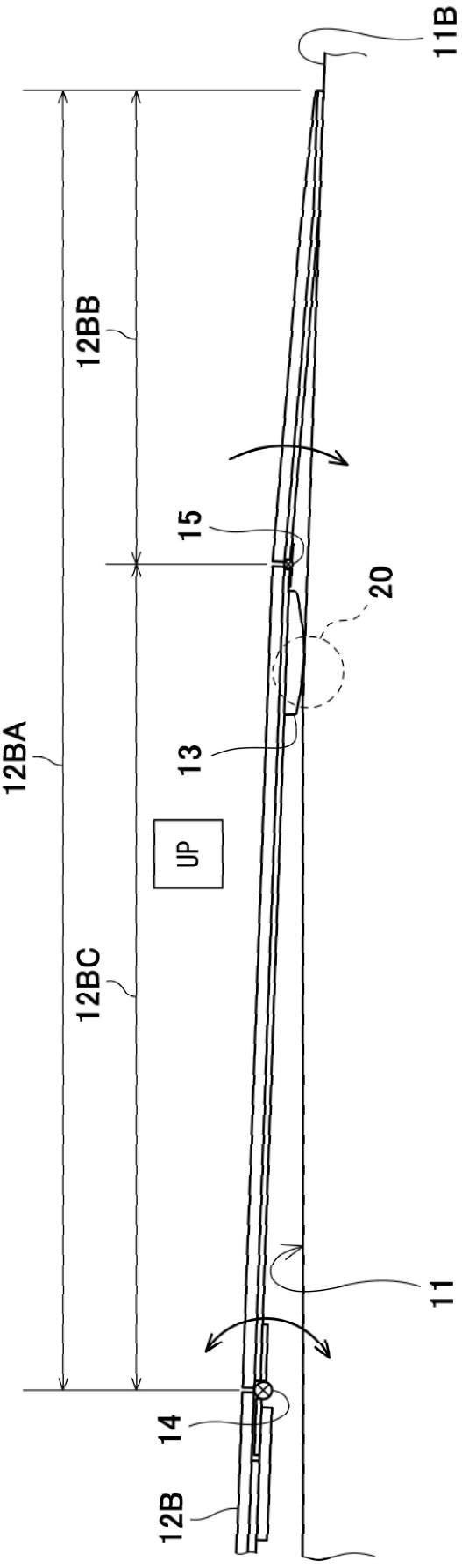
11B
12BB
15
20
12BA
13
UP
12BC
11
14
12B
DOWN

FIG.3B

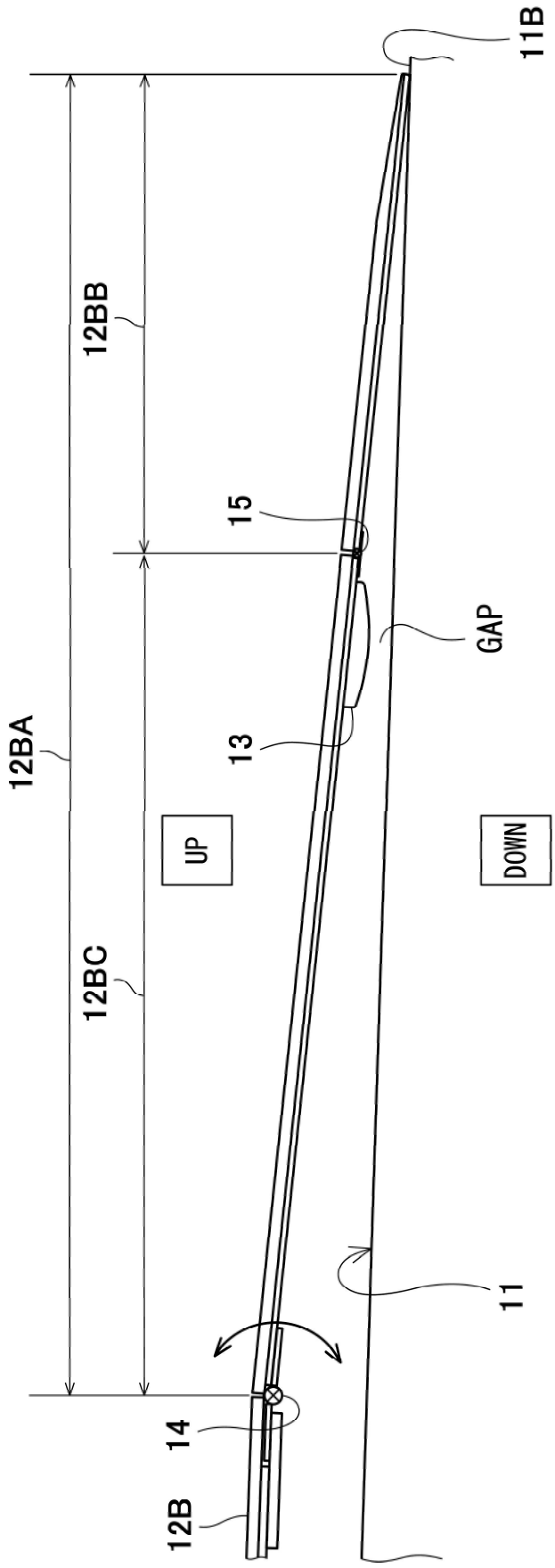
11B
12BB
15
GAP
12BA
13
UP
DOWN
12BC
11
14
12B

FIG.4A

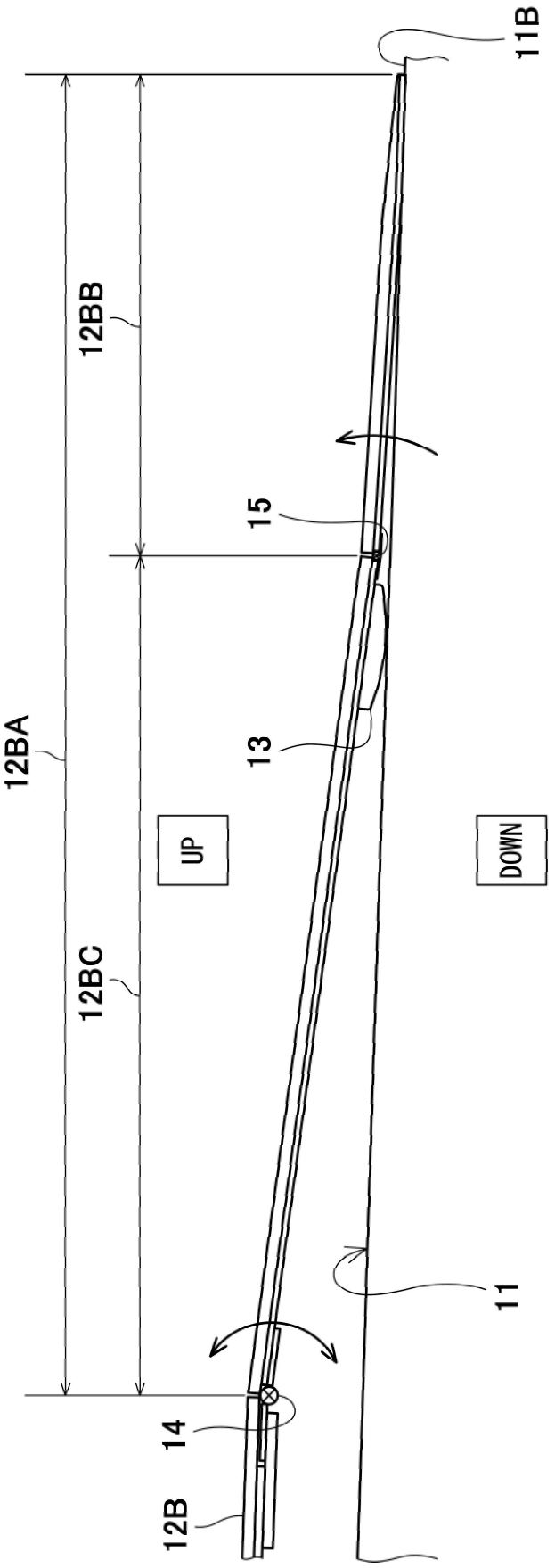
11B
12BB
15
12BA
13
UP
DOWN
12BC
11
14
12B

FIG.4B

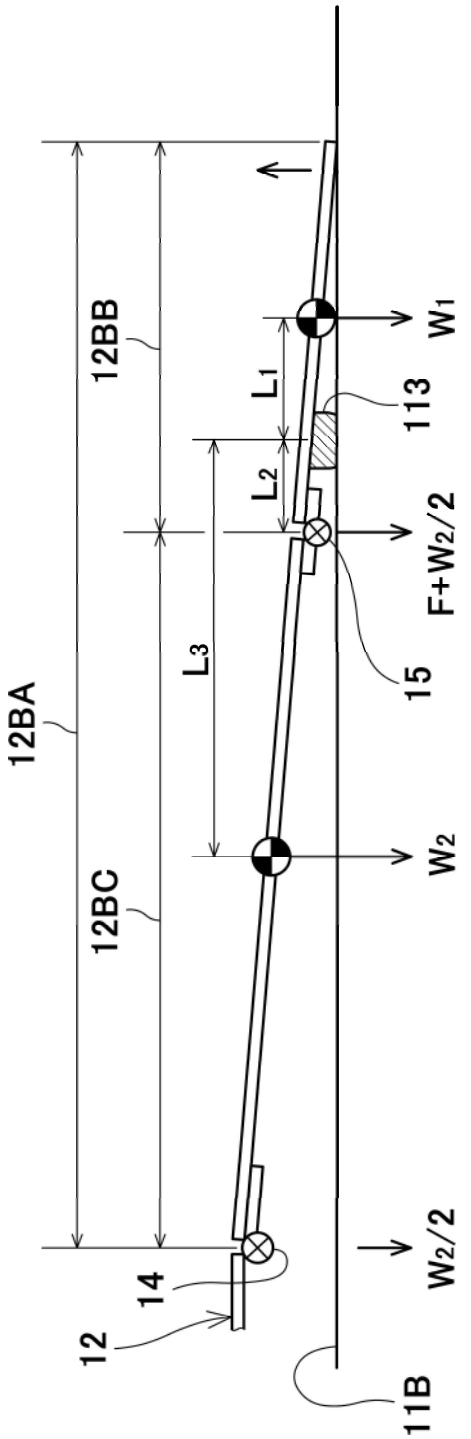

FIG.5