(12) INTERNATIONAL APPLICATION PUBLISHED UNDER THE PATENT COOPERATION TREATY (PCT)

(19) World Intellectual Property Organization
International Bureau

(43) International Publication Date
21 August 2003 (21.08.2003)

PCT

(10) International Publication Number
WO 03/068509 A1

(51) International Patent Classification[7]: B41J 2/01, G08C 17/00, H04B 1/00

(21) International Application Number: PCT/AU03/00165

(22) International Filing Date: 12 February 2003 (12.02.2003)

(25) Filing Language: English

(26) Publication Language: English

(30) Priority Data:
PS 0478 13 February 2002 (13.02.2002) AU

(71) Applicant *(for all designated States except US)*: **SILVERBROOK RESEARCH PTY LTD** [AU/AU]; 393 Darling Street, Balmain, New South Wales 2041 (AU).

(72) Inventors; and

(75) Inventors/Applicants *(for US only)*: **SILVERBROOK, Kia** [AU/AU]; Silverbrook Research Pty Ltd, 393 Darling Street, Balmain, New South Wales 2041 (AU). **KING, Tobin, Allen** [AU/AU]; Silverbrook Research Pty Ltd, 393 Darling Street, Balmain, New South Wales 2041 (AU).

(74) Agent: **SILVERBROOK, Kia**; Silverbrook Research Pty Ltd, 393 Darling Street, BALMAIN, New South Wales 2041 (AU).

(81) Designated States *(national)*: AE, AG, AL, AM, AT, AU, AZ, BA, BB, BG, BR, BY, BZ, CA, CH, CN, CO, CR, CU, CZ, DE, DK, DM, DZ, EC, EE, ES, FI, GB, GD, GE, GH, GM, HR, HU, ID, IL, IN, IS, JP, KE, KG, KP, KR, KZ, LC, LK, LR, LS, LT, LU, LV, MA, MD, MG, MK, MN, MW, MX, MZ, NO, NZ, OM, PH, PL, PT, RO, RU, SC, SD, SE, SG, SK, SL, TJ, TM, TN, TR, TT, TZ, UA, UG, US, UZ, VC, VN, YU, ZA, ZM, ZW.

(84) Designated States *(regional)*: ARIPO patent (GH, GM, KE, LS, MW, MZ, SD, SL, SZ, TZ, UG, ZM, ZW), Eurasian patent (AM, AZ, BY, KG, KZ, MD, RU, TJ, TM), European patent (AT, BE, BG, CH, CY, CZ, DE, DK, EE, ES, FI, FR, GB, GR, HU, IE, IT, LU, MC, NL, PT, SE, SI, SK, TR), OAPI patent (BF, BJ, CF, CG, CI, CM, GA, GN, GQ, GW, ML, MR, NE, SN, TD, TG).

Published:
— *with international search report*

[Continued on next page]

(54) Title: PRINTER FOR CONVEYANCE WITH WIRELESS DATA PORT

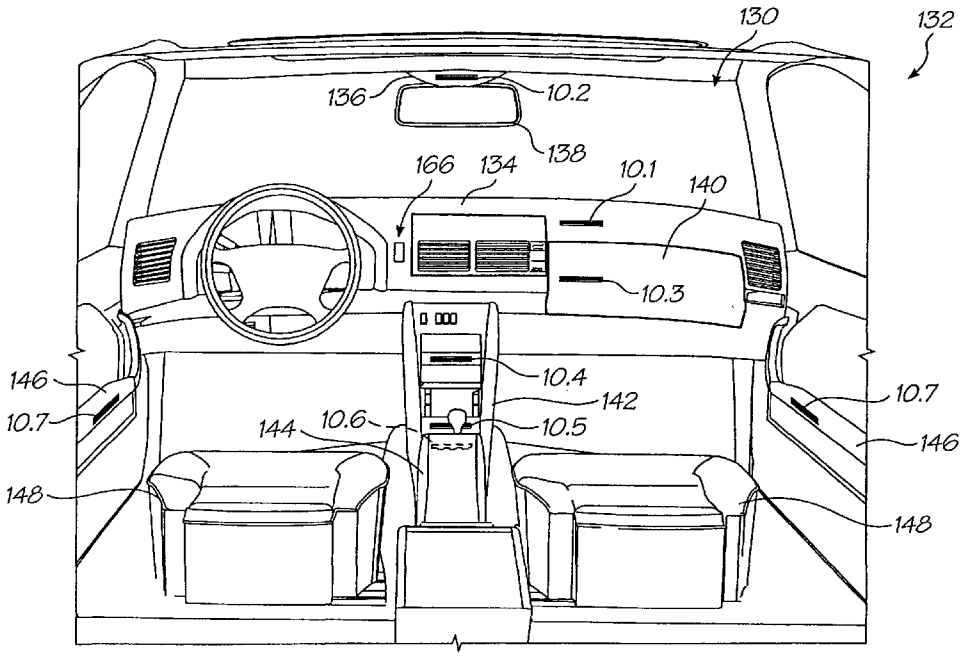

(57) Abstract: A printer arrangement comprises a printing unit (1) receivable in a conveyance (132). A wireless data communications port is incorporated in the unit for enabling data to be printed to be transmitted to the printing unit in a wireless manner.

WO 03/068509 A1

For two-letter codes and other abbreviations, refer to the "Guidance Notes on Codes and Abbreviations" appearing at the beginning of each regular issue of the PCT Gazette.